** Not all features are shown in this drawing. For more detailed information, please contact your Fair-Rite representative.

UNCONTROLLED ~CATALOG~ DRAWING

SIZE	PART NO.	REV.
B	2944666671	~

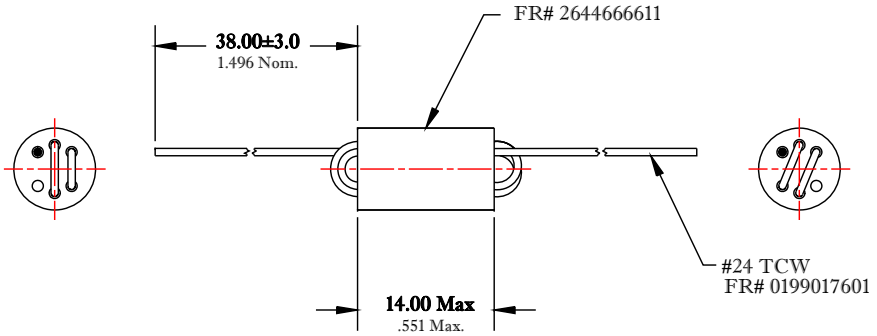

DIMENSIONS
BOLD NUMBERS ARE IN MILLIMETERS
LIGHT NUMBERS ARE IN INCHES

ELECTRICAL SPECIFICATIONS

IMPEDANCE (OHMS)		
10 MHz	50 MHz	100 MHz
300 Min.	750 Min.	820 Min.

LEAD LENGTHS TRIMMED TO 1/2" FROM CORE
TESTED WITH 2-1/2 TURNS #24 AWG

NOTES:

1 – CHIPS, CRACKS, AND APPREARANCE TO MEET FAIR-RITE VISUAL INSPECTION CRITERIA FOR GENERIC MULTI-HOLE WOUND BEADS.

2 – IMPEDANCE MEASURED ON AN E4991A USING A 16092A TEST FIXTURE.

3 – WIRE MEETS SOLDERABILITY SPECIFICATION WHEN TESTED PER SOP# ELC-57.

4 – PART MEETS FAIR-RITE PRODUCTS CORP. SOP# ELC-55, FOR THERMAL SHOCK RESISTANCE.

5 – WIRE LOOPS SHOULD BE UNIFORM IN LENGTH.

6 – PACKAGING: THIS PART IS BULK PACKED.

FR# 44

FAIR-RITE PRODUCTS CORP.

TITLE: WOUND BEAD

DRAWN BY	DATE	SIZE	PART NO.	REV.
D. FOOTE	9/30/2019	B	2944666671	~
CHKD BY				
APPRVD BY		SCALE: NONE	SHEET 1 OF 1	

Unikeyic Electronics

Global Electronic Components Distributor

Click to view pricing, inventory, delivery, and lifecycle information:

Fair-Rite:

444173951 5961003801 5975001101 2677006302 2743002112 5943011101 0446164951 0446167281
2673022401 2675665702 2643801002 2867000102 4077296011 5943000911 5978003801 5977000301
0199000005 0461178181 2643626502 2661000801 2675821502 3078990851 0444177081 2873006802
2944666661 2961666631 5943000501 5977001721 2643801102 5943018601