ON Semiconductor

Is Now



To learn more about onsemi™, please visit our website at
www.onsemi.com

onsemi and onsemi and other names, marks, and brands are registered and/or common law trademarks of Semiconductor Components Industries, LLC dba "**onsemi**" or its affiliates and/or subsidiaries in the United States and/or other countries. **onsemi** owns the rights to a number of patents, trademarks, copyrights, trade secrets, and other intellectual property. A listing of **onsemi** product/patent coverage may be accessed at www.onsemi.com/site/pdf/Patent-Marking.pdf. **onsemi** reserves the right to make changes at any time to any products or information herein, without notice. The information herein is provided "as-is" and **onsemi** makes no warranty, representation or guarantee regarding the accuracy of the information, product features, availability, functionality, or suitability of its products for any particular purpose, nor does **onsemi** assume any liability arising out of the application or use of any product or circuit, and specifically disclaims any and all liability, including without limitation special, consequential or incidental damages. Buyer is responsible for its products and applications using **onsemi** products, including compliance with all laws, regulations and safety requirements or standards, regardless of any support or applications information provided by **onsemi**. "Typical" parameters which may be provided in **onsemi** data sheets and/or specifications can and do vary in different applications and actual performance may vary over time. All operating parameters, including "Typicals" must be validated for each customer application by customer's technical experts. **onsemi** does not convey any license under any of its intellectual property rights nor the rights of others. **onsemi** products are not designed, intended, or authorized for use as a critical component in life support systems or any FDA Class 3 medical devices or medical devices with a same or similar classification in a foreign jurisdiction or any devices intended for implantation in the human body. Should Buyer purchase or use **onsemi** products for any such unintended or unauthorized application, Buyer shall indemnify and hold **onsemi** and its officers, employees, subsidiaries, affiliates, and distributors harmless against all claims, costs, damages, and expenses, and reasonable attorney fees arising out of, directly or indirectly, any claim of personal injury or death associated with such unintended or unauthorized use, even if such claim alleges that **onsemi** was negligent regarding the design or manufacture of the part. **onsemi** is an Equal Opportunity/Affirmative Action Employer. This literature is subject to all applicable copyright laws and is not for resale in any manner. Other names and brands may be claimed as the property of others.

Dual Non-Inverting Schmitt Trigger Buffer

MC74VHC2G17, MC74VHC2GT17

The MC74VHC2G17/MC74VHC2GT17 is a high performance dual buffer with Schmitt−Trigger inputs operating from a 2.0 to 5.5 V supply. The MC74VHC2G17 has CMOS−level input thresholds while the MC74VHC2GT17 has TTL−level input thresholds.

Features

- Designed for 2.0 V to 5.5 V V_{CC} Operation
- 4.0 ns t_{PD} at V_{CC} = 5 V (Typ)
- Inputs/Outputs Overvoltage Tolerant up to 5.5 V
- I_{OFF} Supports Partial Power Down Protection
- Sink 8 mA at 4.5 V
- Available in SC−88, SC−74, and UDFN6 Packages
- Chip Complexity < 100 FETs
- These Devices are Pb−Free, Halogen Free/BFR Free and are RoHS Compliant

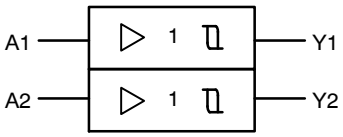

Figure 1. Logic Symbol

ON Semiconductor®

www.onsemi.com

MARKING DIAGRAMS

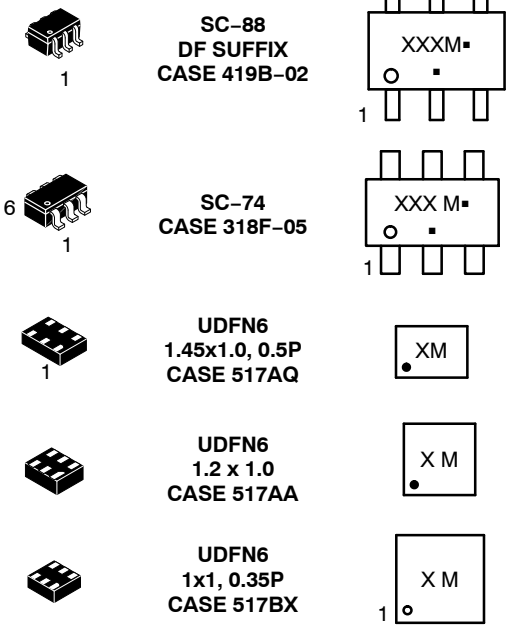

X, XXX = Specific Device Code
M = Date Code*
▪ = Pb−Free Package

(Note: Microdot may be in either location)

*Date Code orientation and/or position may vary depending upon manufacturing location.

ORDERING INFORMATION

See detailed ordering and shipping information in the package dimensions section on page 7 of this data sheet.

© Semiconductor Components Industries, LLC, 2019

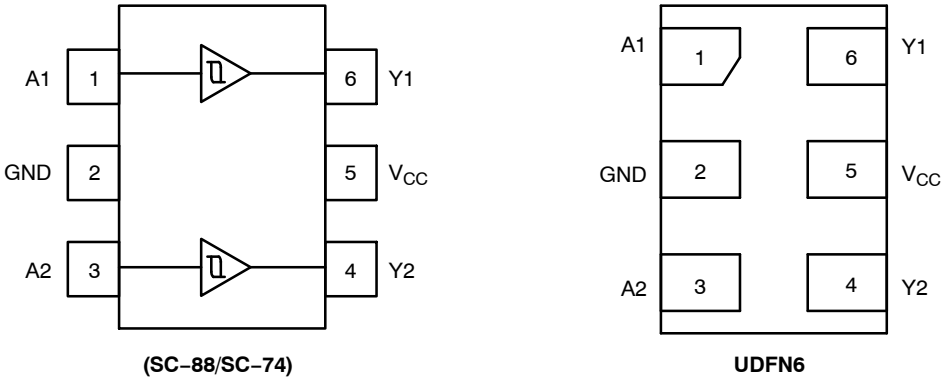

Figure 2. Pinout (Top View)

PIN ASSIGNMENT

Pin	Function
1	A1
2	GND
3	A2
4	Y2
5	V_{CC}
6	Y1

FUNCTION TABLE

A Input	Y Output
L	L
H	H

MAXIMUM RATINGS

Symbol	Characteristics		Value	Units
V_{CC}	DC Supply Voltage		−0.5 to +6.5	V
V_{IN}	DC Input Voltage		−0.5 to +6.5	V
V_{OUT}	DC Output Voltage SC−88, SC−74, UDFN6	Active−Mode (High or Low State) Tri−State Mode (Note 1) Power−Down Mode (V_{CC} = 0 V)	−0.5 to V_{CC} +0.5 −0.5 to +6.5 −0.5 to +6.5	V
I_{IK}	DC Input Diode Current, V_{IN} < GND		−20	mA
I_{OK}	DC Output Diode Current, V_{OUT} < GND		−20	mA
I_{OUT}	DC Output Source/Sink Current		±25	mA
I_{CC} or I_{GND}	DC Supply Current per Supply Pin or Ground Pin		±50	mA
T_{STG}	Storage Temperature Range		−65 to +150	°C
T_L	Lead Temperature, 1 mm from Case for 10 secs		260	°C
T_J	Junction Temperature under Bias		+150	°C
θ_{JA}	Thermal Resistance (Note 2)	SC−88 SC−74 UDFN6	377 320 154	°C/W
P_D	Power Dissipation in Still Air	SC−88 SC−74 UDFN6	332 390 812	mW
MSL	Moisture Sensitivity		Level 1	−
F_R	Flamebility Rating	Oxygen Index: 28 to 34	UL 94−V−0 @ 0.125 in	−
V_{ESD}	ESD Withstand Voltage (Note 3)	Human Body Model Charged Device Model	2000 1000	V
$I_{LATCHUP}$	Latchup Performance (Note 4)		±100	mA

Stresses exceeding those listed in the Maximum Ratings table may damage the device. If any of these limits are exceeded, device functionality should not be assumed, damage may occur and reliability may be affected.

1. Applicable to devices with outputs that may be tri−stated.
2. Measured with minimum pad spacing on an FR4 board, using 10 mm−by−1 inch, 2 ounce copper trace no air flow per JESD51−7.
3. HBM tested to ANSI/ESDA/JEDEC JS−001−2017. CDM tested to EIA/JESD22−C101−F. JEDEC recommends that ESD qualification to EIA/JESD22−A115−A (Machine Model) be discontinued per JEDEC/JEP172A.
4. Tested to EIA/JESD78 Class II.

RECOMMENDED OPERATING CONDITIONS

Symbol	Parameter		Min	Max	Unit
V_{CC}	Positive DC Supply Voltage		2.0	5.5	V
V_{IN}	DC Input Voltage		0	5.5	V
V_{OUT}	DC Output Voltage	Active−Mode (High or Low State) Tri−State Mode (Note 1) Power−Down Mode (V_{CC} = 0 V)	0 0 0	V_{CC} 5.5 5.5	V
T_A	Operating Temperature Range		−55	+125	°C
t_r , t_f	Input Transition Rise or Fall Rate	V_{CC} = 2.0 V V_{CC} = 2.3 V to 2.7 V V_{CC} = 3.0 V to 3.6 V V_{CC} = 4.5 V to 5.5 V	0 0 0 0	No Limit No Limit No Limit No Limit	ns

Functional operation above the stresses listed in the Recommended Operating Ranges is not implied. Extended exposure to stresses beyond the Recommended Operating Ranges limits may affect device reliability.

DC ELECTRICAL CHARACTERISTICS (MC74VHC2G17)

Symbol	Parameter	Test Conditions	V_{CC} (V)	T_A = 25°C			−40°C ≤ T_A ≤ 85°C		−55°C ≤ T_A ≤ 125°C		Unit
				Min	Typ	Max	Min	Max	Min	Max	
V_{T+}	Positive Threshold Voltage		3.0 4.5 5.5	– – –	2.0 3.0 3.6	2.20 3.15 3.85	– – –	2.20 3.15 3.85	– – –	2.20 3.15 3.85	V
V_{T-}	Negative Threshold Voltage		3.0 4.5 5.5	0.9 1.35 1.65	1.5 2.3 2.9	– – –	0.9 1.35 1.65	– – –	0.9 1.35 1.65	– – –	V
V_H	Hysteresis Voltage		3.0 4.5 5.5	0.30 0.40 0.50	0.57 0.67 0.74	1.20 1.40 1.60	0.30 0.40 0.50	1.20 1.40 1.60	0.30 0.40 0.50	1.20 1.40 1.60	V
V_{OH}	High−Level Output Voltage	V_{IN} = V_{IH} or V_{IL} I_{OH} = −50 μA I_{OH} = −50 μA I_{OH} = −50 μA I_{OH} = −4 mA I_{OH} = −8 mA	 2.0 3.0 4.5 3.0 4.5	 1.9 2.9 4.4 2.58 3.94	 2.0 3.0 4.5 – –	 – – – – –	 1.9 2.9 4.4 2.48 3.80	 – – – – –	 1.9 2.9 4.4 2.34 3.66	 – – – – –	V
V_{OL}	Low−Level Output Voltage	V_{IN} = V_{IH} or V_{IL} I_{OL} = 50 μA I_{OL} = 50 μA I_{OL} = 50 μA I_{OL} = 4 mA I_{OL} = 8 mA	 2.0 3.0 4.5 3.0 4.5	 – – – – –	 0.0 0.0 0.0 – –	 0.1 0.1 0.1 0.36 0.36	 – – – – –	 0.1 0.1 0.1 0.44 0.44	 – – – – –	 0.1 0.1 0.1 0.52 0.52	V
I_{IN}	Input Leakage Current	V_{IN} = 5.5 V or GND	2.0 to 5.5	–	–	±0.1	–	±1.0	–	± 1.0	μA
I_{OFF}	Power Off Leakage Current	V_{IN} = 5.5 V or V_{OUT} = 5.5 V	0	–	–	1.0	–	10	–	10	μA
I_{CC}	Quiescent Supply Current	V_{IN} = V_{CC} or GND	5.5	–	–	1.0	–	20	–	40	μA

DC ELECTRICAL CHARACTERISTICS (MC74VHC2GT17)

Symbol	Parameter	Test Conditions	V_{CC} (V)	T_A = 25°C			−40°C ≤ T_A ≤ 85°C		−55°C ≤ T_A ≤ 125°C		Unit
				Min	Typ	Max	Min	Max	Min	Max	
V_{T+}	Positive Threshold Voltage		3.0 4.5 5.5	– – –	1.40 1.74 1.94	1.60 2.00 2.10	– – –	1.6 2.0 2.1	– – –	1.6 2.0 2.1	V
V_{T-}	Negative Threshold Voltage		3.0 4.5 5.5	0.35 0.5 0.6	0.76 1.01 1.13	– – –	0.35 0.5 0.6	– – –	0.35 0.5 0.6	– – –	V
V_H	Hysteresis Voltage		3.0 4.5 5.5	0.30 0.40 0.50	0.64 0.73 0.81	1.20 1.40 1.60	0.30 0.40 0.50	1.20 1.40 1.60	0.30 0.40 0.50	1.20 1.40 1.60	V
V_{OH}	High−Level Output Voltage	V_{IN} = V_{IH} or V_{IL} I_{OH} = −50 μA I_{OH} = −50 μA I_{OH} = −50 μA I_{OH} = −4 mA I_{OH} = −8 mA	 2.0 3.0 4.5 3.0 4.5	 1.9 2.9 4.4 2.58 3.94	 2.0 3.0 4.5 – –	 – – – – –	 1.9 2.9 4.4 2.48 3.80	 – – – – –	 1.9 2.9 4.4 2.34 3.66	 – – – – –	V
V_{OL}	Low−Level Output Voltage	V_{IN} = V_{IH} or V_{IL} I_{OL} = 50 μA I_{OL} = 50 μA I_{OL} = 50 μA I_{OL} = 4 mA I_{OL} = 8 mA	 2.0 3.0 4.5 3.0 4.5	 – – – – –	 0.0 0.0 0.0 – –	 0.1 0.1 0.1 0.36 0.36	 – – – – –	 0.1 0.1 0.1 0.44 0.44	 – – – – –	 0.1 0.1 0.1 0.52 0.52	V
I_{IN}	Input Leakage Current	V_{IN} = 5.5 V or GND	2.0 to 5.5	–	–	±0.1	–	±1.0	–	± 1.0	μA
I_{OFF}	Power Off Leakage Current	V_{IN} = 5.5 V or V_{OUT} = 5.5 V	0	–	–	1.0	–	10	–	10	μA
I_{CC}	Quiescent Supply Current	V_{IN} = V_{CC} or GND	5.5	–	–	1.0	–	20	–	40	μA
I_{CCT}	Increase in Quiescent Supply Current per Input Pin	One Input: V_{IN} = 3.4 V; Other Input at V_{CC} or GND	5.5	–	–	1.35	–	1.5	–	1.65	mA

AC ELECTRICAL CHARACTERISTICS

Symbol	Parameter	Conditions	V_{CC} (V)	T_A = 25°C			−40°C ≤ T_A ≤ 85°C		−55°C ≤ T_A ≤ 125°C		Unit
				Min	Typ	Max	Min	Max	Min	Max	
t_{PLH}, t_{PHL}	Propagation Delay, A to Y (Figures 3 and 4)	C_L = 15 pF	3.0 to 3.6	–	7.0	12.8	–	15.0	–	17.0	ns
		C_L = 50 pF		–	8.5	16.3	–	18.5	–	20.5	
		C_L = 15 pF	4.5 to 5.5	–	4.0	8.6	–	10.0	–	11.5	
		C_L = 50 pF		–	5.5	10.6	–	12.0	–	13.5	
C_{IN}	Input Capacitance			–	4.0	10	–	10	–	10	pF
C_{OUT}	Output Capacitance	Output in High Impedance State		–	6.0	–	–	–	–	–	pF

		Typical @ 25°C, V_{CC} = 5.0 V	
C_{PD}	Power Dissipation Capacitance (Note 5)	8.0	pF

5. C_{PD} is defined as the value of the internal equivalent capacitance which is calculated from the operating current consumption without load. Average operating current can be obtained by the equation: $I_{CC(OPR)} = C_{PD} \bullet V_{CC} \bullet f_{in} + I_{CC}$. C_{PD} is used to determine the no−load dynamic power consumption; $P_D = C_{PD} \bullet V_{CC}^2 \bullet f_{in} + I_{CC} \bullet V_{CC}$.

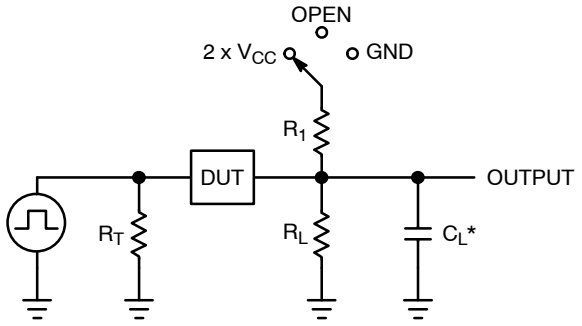

C_L includes probe and jig capacitance
R_T is Z_{OUT} of pulse generator (typically 50 Ω)
f = 1 MHz

Test	Switch Position	C_L, pF	R_L, Ω
t_{PLH} / t_{PHL}	Open	See AC Characteristics Table	X
t_{PLZ} / t_{PZL}	V_{CC}		1 k
t_{PHZ} / t_{PZH}	GND		1 k

X = Don't Care

Figure 3. Test Circuit

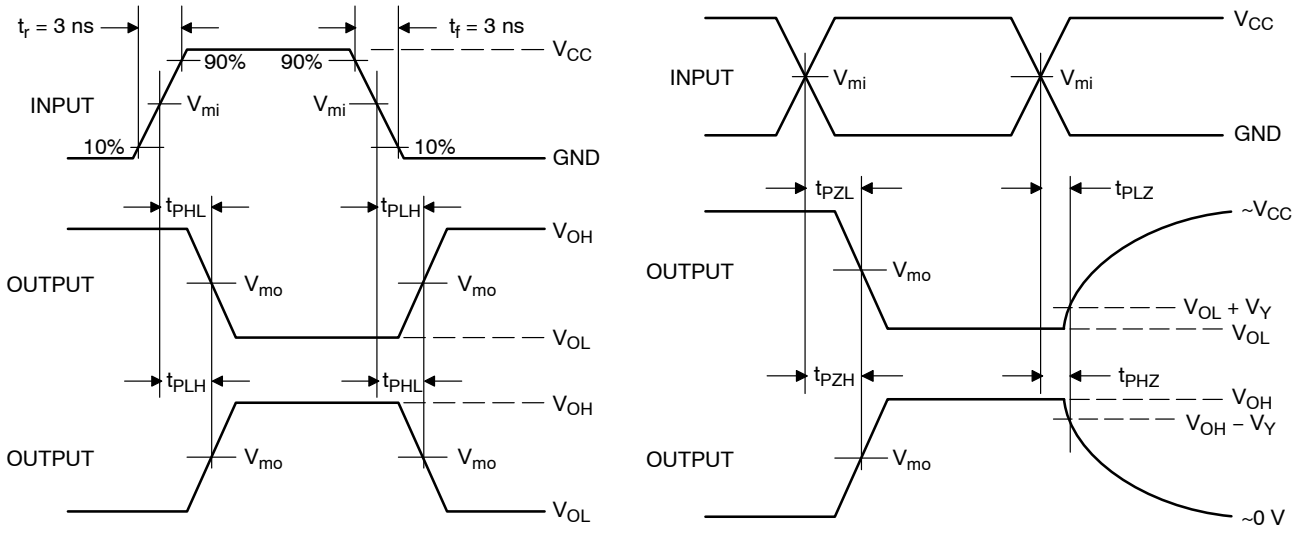

Figure 4. Switching Waveforms

V_{CC}, V	V_{mi}, V	V_{mo}, V		V_Y, V
		t_{PLH}, t_{PHL}	t_{PZL}, t_{PLZ}, t_{PZH}, t_{PHZ}	
3.0 to 3.6	V_{CC} / 2	V_{CC} / 2	V_{CC} / 2	0.3
4.5 to 5.5	V_{CC} / 2	V_{CC} / 2	V_{CC} / 2	0.3

ORDERING INFORMATION

Device	Package	Specific Device Code	Pin1 Orientation (See bellow)	Shipping†
MC74VHC2G17DFT2G (In Development)	SC−88	TBD	Q4	3000 / Tape & Reel
MC74VHC2G17DBVT1G (In Development)	SC−74	TBD	Q4	3000 / Tape & Reel
MC74VHC2G17MU2TCG (In Development)	UDFN6, 1.2 x 1.0, 0.4P	A	Q4	3000 / Tape & Reel
MC74VHC2G17MU1TCG (In Development)	UDFN6, 1.45 x 1.0, 0.5P	R (Rotated 90° CW)	Q4	3000 / Tape & Reel
MC74VHC2G17MU3TCG (In Development)	UDFN6, 1.0 x 1.0, 0.35P	5 (Rotated 90° CW)	Q4	3000 / Tape & Reel
MC74VHC2GT17DFT2G (In Development)	SC−88	TBD	Q4	3000 / Tape & Reel
MC74VHC2GT17DBVT1G (In Development)	SC−74	TBD	Q4	3000 / Tape & Reel
MC74VHC2GT17MU1TCG (In Development)	UDFN6, 1.45 x 1.0, 0.5P	TBD	Q4	3000 / Tape & Reel
MC74VHC2GT17MU3TCG (In Development)	UDFN6, 1.0 x 1.0, 0.35P	TBD	Q4	3000 / Tape & Reel

†For information on tape and reel specifications, including part orientation and tape sizes, please refer to our Tape and Reel Packaging Specifications Brochure, BRD8011/D.

Pin 1 Orientation in Tape and Reel

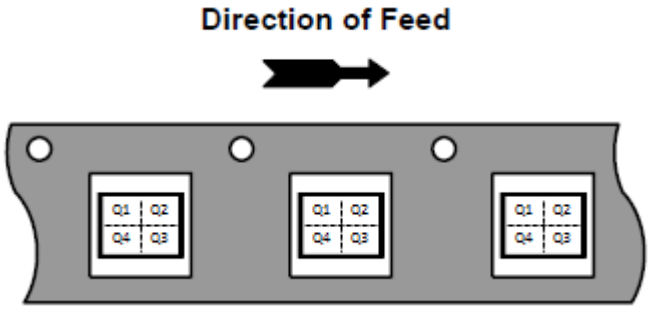

PACKAGE DIMENSIONS

SC−88/SC70−6/SOT−363
CASE 419B−02
ISSUE Y

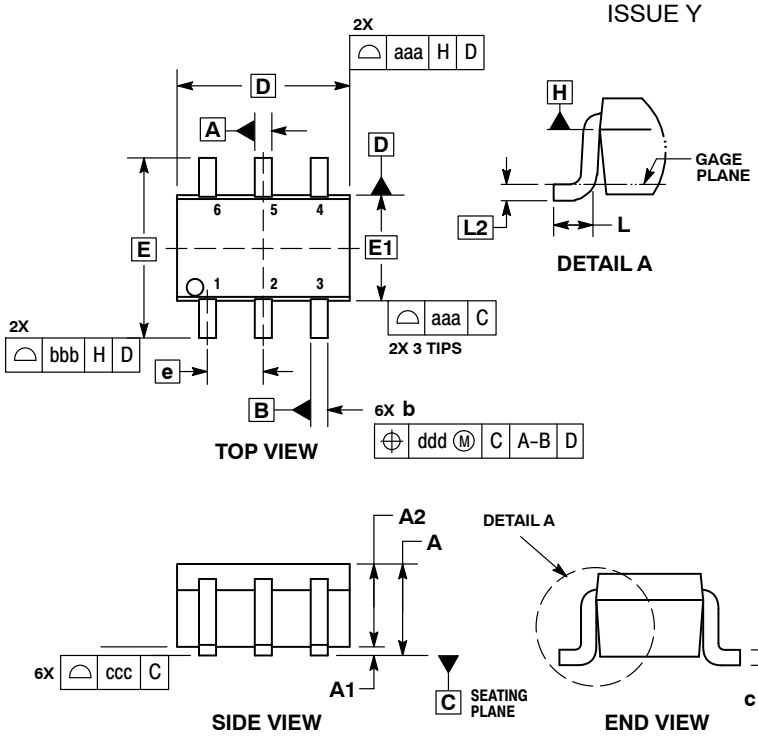

NOTES:
1. DIMENSIONING AND TOLERANCING PER ASME Y14.5M, 1994.
2. CONTROLLING DIMENSION: MILLIMETERS.
3. DIMENSIONS D AND E1 DO NOT INCLUDE MOLD FLASH, PROTRUSIONS, OR GATE BURRS. MOLD FLASH, PROTRUSIONS, OR GATE BURRS SHALL NOT EXCEED 0.20 PER END.
4. DIMENSIONS D AND E1 AT THE OUTERMOST EXTREMES OF THE PLASTIC BODY AND DATUM H.
5. DATUMS A AND B ARE DETERMINED AT DATUM H.
6. DIMENSIONS b AND c APPLY TO THE FLAT SECTION OF THE LEAD BETWEEN 0.08 AND 0.15 FROM THE TIP.
7. DIMENSION b DOES NOT INCLUDE DAMBAR PROTRUSION. ALLOWABLE DAMBAR PROTRUSION SHALL BE 0.08 TOTAL IN EXCESS OF DIMENSION b AT MAXIMUM MATERIAL CONDITION. THE DAMBAR CANNOT BE LOCATED ON THE LOWER RADIUS OF THE FOOT.

	MILLIMETERS			INCHES		
DIM	MIN	NOM	MAX	MIN	NOM	MAX
A	−−−	−−−	1.10	−−−	−−−	0.043
A1	0.00	−−−	0.10	0.000	−−−	0.004
A2	0.70	0.90	1.00	0.027	0.035	0.039
b	0.15	0.20	0.25	0.006	0.008	0.010
C	0.08	0.15	0.22	0.003	0.006	0.009
D	1.80	2.00	2.20	0.070	0.078	0.086
E	2.00	2.10	2.20	0.078	0.082	0.086
E1	1.15	1.25	1.35	0.045	0.049	0.053
e	0.65 BSC			0.026 BSC		
L	0.26	0.36	0.46	0.010	0.014	0.018
L2	0.15 BSC			0.006 BSC		
aaa	0.15			0.006		
bbb	0.30			0.012		
ccc	0.10			0.004		
ddd	0.10			0.004		

RECOMMENDED SOLDERING FOOTPRINT*

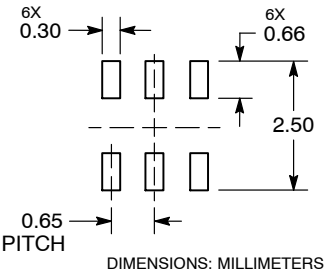

DIMENSIONS: MILLIMETERS

*For additional information on our Pb−Free strategy and soldering details, please download the ON Semiconductor Soldering and Mounting Techniques Reference Manual, SOLDERRM/D.

PACKAGE DIMENSIONS

SC−74
CASE 318F−05
ISSUE N

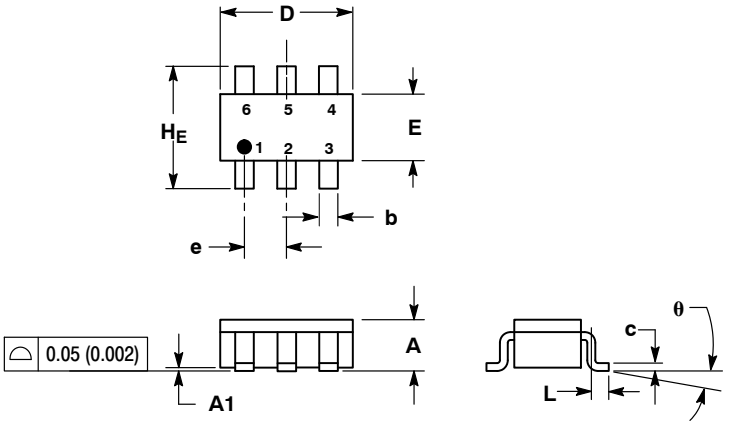

NOTES:
1. DIMENSIONING AND TOLERANCING PER ANSI Y14.5M, 1982.
2. CONTROLLING DIMENSION: INCH.
3. MAXIMUM LEAD THICKNESS INCLUDES LEAD FINISH THICKNESS. MINIMUM LEAD THICKNESS IS THE MINIMUM THICKNESS OF BASE MATERIAL.
4. 318F−01, −02, −03, −04 OBSOLETE. NEW STANDARD 318F−05.

	MILLIMETERS			INCHES		
DIM	MIN	NOM	MAX	MIN	NOM	MAX
A	0.90	1.00	1.10	0.035	0.039	0.043
A1	0.01	0.06	0.10	0.001	0.002	0.004
b	0.25	0.37	0.50	0.010	0.015	0.020
c	0.10	0.18	0.26	0.004	0.007	0.010
D	2.90	3.00	3.10	0.114	0.118	0.122
E	1.30	1.50	1.70	0.051	0.059	0.067
e	0.85	0.95	1.05	0.033	0.037	0.041
L	0.20	0.40	0.60	0.008	0.016	0.024
H_E	2.50	2.75	3.00	0.099	0.108	0.118
θ		–			–	

SOLDERING FOOTPRINT*

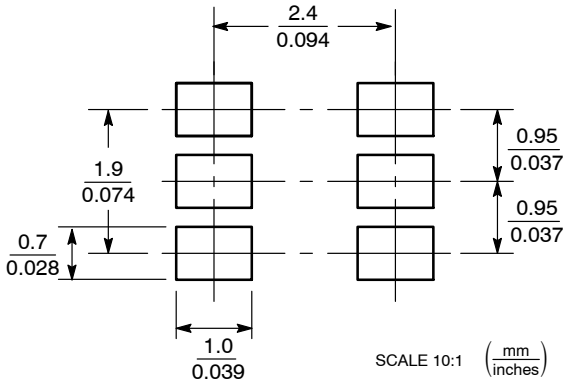

*For additional information on our Pb−Free strategy and soldering details, please download the ON Semiconductor Soldering and Mounting Techniques Reference Manual, SOLDERRM/D.

PACKAGE DIMENSIONS

UDFN6, 1.45x1.0, 0.5P
CASE 517AQ
ISSUE O

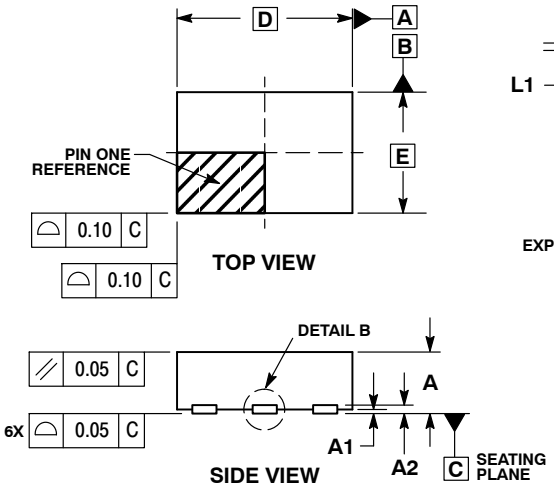

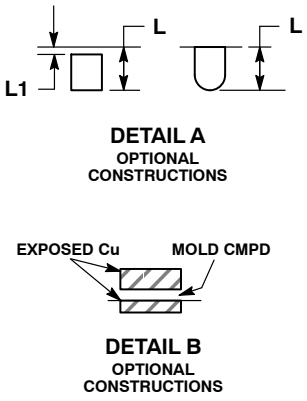

NOTES:
1. DIMENSIONING AND TOLERANCING PER ASME Y14.5M, 1994.
2. CONTROLLING DIMENSION: MILLIMETERS.
3. DIMENSION b APPLIES TO PLATED TERMINAL AND IS MEASURED BETWEEN 0.15 AND 0.30 mm FROM THE TERMINAL TIP.

	MILLIMETERS	
DIM	MIN	MAX
A	0.45	0.55
A1	0.00	0.05
A2	0.07 REF	
b	0.20	0.30
D	1.45 BSC	
E	1.00 BSC	
e	0.50 BSC	
L	0.30	0.40
L1	–––	0.15

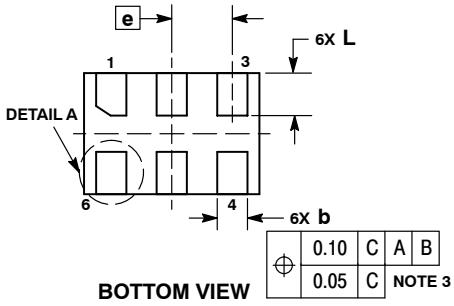

MOUNTING FOOTPRINT

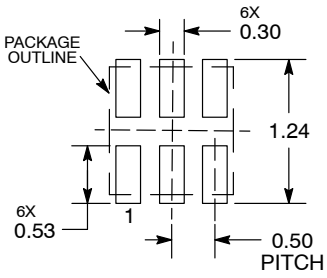

DIMENSIONS: MILLIMETERS

*For additional information on our Pb−Free strategy and soldering details, please download the ON Semiconductor Soldering and Mounting Techniques Reference Manual, SOLDERRM/D.

PACKAGE DIMENSIONS

UDFN6, 1.2x1.0, 0.4P
CASE 517AA−01
ISSUE D

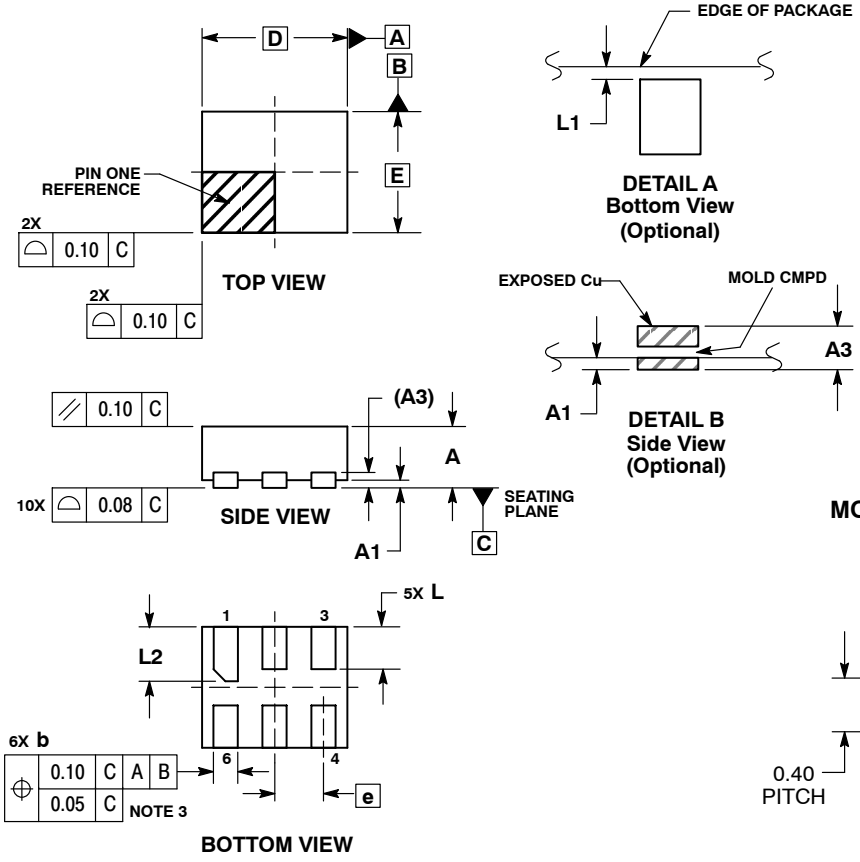

NOTES:
1. DIMENSIONING AND TOLERANCING PER ASME Y14.5M, 1994.
2. CONTROLLING DIMENSION: MILLIMETERS.
3. DIMENSION b APPLIES TO PLATED TERMINAL AND IS MEASURED BETWEEN 0.25 AND 0.30 mm FROM TERMINAL.
4. COPLANARITY APPLIES TO THE EXPOSED PAD AS WELL AS THE TERMINALS.

	MILLIMETERS	
DIM	MIN	MAX
A	0.45	0.55
A1	0.00	0.05
A3	0.127 REF	
b	0.15	0.25
D	1.20 BSC	
E	1.00 BSC	
e	0.40 BSC	
L	0.30	0.40
L1	0.00	0.15
L2	0.40	0.50

MOUNTING FOOTPRINT*

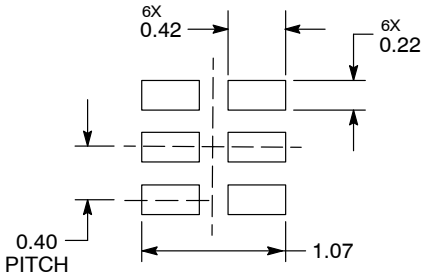

DIMENSIONS: MILLIMETERS

*For additional information on our Pb−Free strategy and soldering details, please download the ON Semiconductor Soldering and Mounting Techniques Reference Manual, SOLDERRM/D.

PACKAGE DIMENSIONS

UDFN6, 1x1, 0.35P
CASE 517BX
ISSUE O

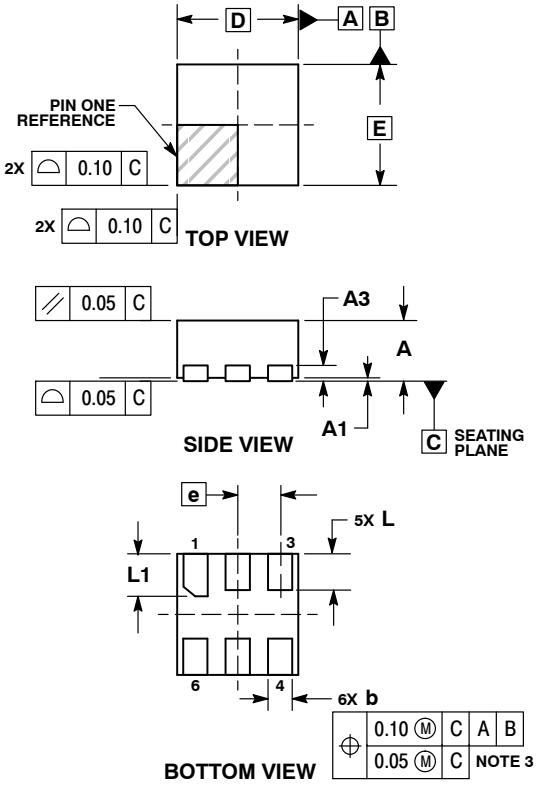

NOTES:
1. DIMENSIONING AND TOLERANCING PER ASME Y14.5M, 1994.
2. CONTROLLING DIMENSION: MILLIMETERS.
3. DIMENSION b APPLIES TO PLATED TERMINAL AND IS MEASURED BETWEEN 0.15 AND 0.20 MM FROM TERMINAL TIP.
4. PACKAGE DIMENSIONS EXCLUSIVE OF BURRS AND MOLD FLASH.

	MILLIMETERS	
DIM	MIN	MAX
A	0.45	0.55
A1	0.00	0.05
A3	0.13 REF	
b	0.12	0.22
D	1.00 BSC	
E	1.00 BSC	
e	0.35 BSC	
L	0.25	0.35
L1	0.30	0.40

RECOMMENDED SOLDERING FOOTPRINT*

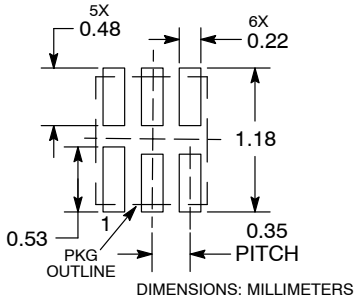

DIMENSIONS: MILLIMETERS

*For additional information on our Pb−Free strategy and soldering details, please download the ON Semiconductor Soldering and Mounting Techniques Reference Manual, SOLDERRM/D.

ON Semiconductor and ON are trademarks of Semiconductor Components Industries, LLC dba ON Semiconductor or its subsidiaries in the United States and/or other countries. ON Semiconductor owns the rights to a number of patents, trademarks, copyrights, trade secrets, and other intellectual property. A listing of ON Semiconductor's product/patent coverage may be accessed at www.onsemi.com/site/pdf/Patent−Marking.pdf. ON Semiconductor reserves the right to make changes without further notice to any products herein. ON Semiconductor makes no warranty, representation or guarantee regarding the suitability of its products for any particular purpose, nor does ON Semiconductor assume any liability arising out of the application or use of any product or circuit, and specifically disclaims any and all liability, including without limitation special, consequential or incidental damages. Buyer is responsible for its products and applications using ON Semiconductor products, including compliance with all laws, regulations and safety requirements or standards, regardless of any support or applications information provided by ON Semiconductor. "Typical" parameters which may be provided in ON Semiconductor data sheets and/or specifications can and do vary in different applications and actual performance may vary over time. All operating parameters, including "Typicals" must be validated for each customer application by customer's technical experts. ON Semiconductor does not convey any license under its patent rights nor the rights of others. ON Semiconductor products are not designed, intended, or authorized for use as a critical component in life support systems or any FDA Class 3 medical devices or medical devices with a same or similar classification in a foreign jurisdiction or any devices intended for implantation in the human body. Should Buyer purchase or use ON Semiconductor products for any such unintended or unauthorized application, Buyer shall indemnify and hold ON Semiconductor and its officers, employees, subsidiaries, affiliates, and distributors harmless against all claims, costs, damages, and expenses, and reasonable attorney fees arising out of, directly or indirectly, any claim of personal injury or death associated with such unintended or unauthorized use, even if such claim alleges that ON Semiconductor was negligent regarding the design or manufacture of the part. ON Semiconductor is an Equal Opportunity/Affirmative Action Employer. This literature is subject to all applicable copyright laws and is not for resale in any manner.

PUBLICATION ORDERING INFORMATION

LITERATURE FULFILLMENT:
Email Requests to: orderlit@onsemi.com

ON Semiconductor Website: www.onsemi.com

TECHNICAL SUPPORT
North American Technical Support:
Voice Mail: 1 800−282−9855 Toll Free USA/Canada
Phone: 011 421 33 790 2910

Europe, Middle East and Africa Technical Support:
Phone: 00421 33 790 2910
For additional information, please contact your local Sales Representative

◊

Unikeyic Electronics

Global Electronic Components Distributor

Click to view pricing, inventory, delivery, and lifecycle information:

ON Semiconductor:

CNY17-3V-M NCP114AMX250TCG NCP1342ENDCEAD1R2G NCP1397BDR2G NCV5501DT33RKG FDMA7672 KSA1156OSTSTU NTBG060N090SC1 UC2845BD1R2G CS8182YDPSR5G FDMS7608S FOD2741AV LB1861M-TLM-H LM385BD-2.5R2G MC74ACT541DWG NB3N853531EDTG SZ1SMA5913BT3G LA4440J-E MC74LCX02DTR2G NCP1566MNTXG TLV431CSN1T1G MC34152DR2G MMBTH81 NCS20081MUTAG 1SMA5938BT3G LM393NG LV8014T-TLM-E MC33077DR2G MOC212R2M NC7WV07P6X