REV.	ECN NO.	DATE	SIGN	DESCRIPTION
A	Initial Release	2012/11/07	Ruru	HB20-04RMFS-SS8001 To HB20-04PMFS-SN8001
B	LEN14A0095	2014/09/13	Feng_Li	Change Logo Dorection
C	LE31650207	2016/05/03	Vicky	Update Note

ALTW
CONFIDENTIAL
2016-05-03
R&D DEPT.

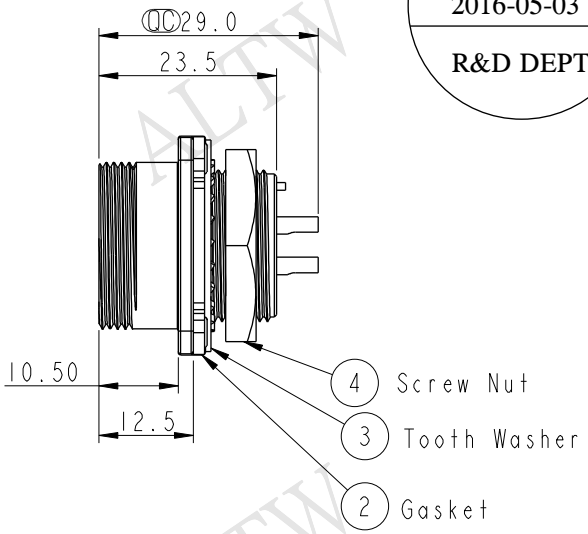

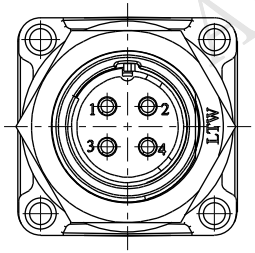

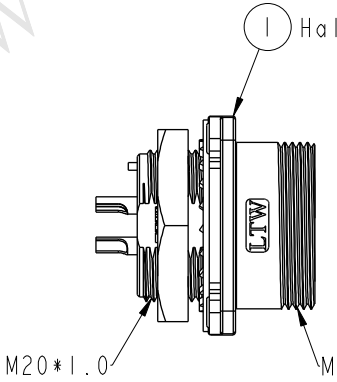

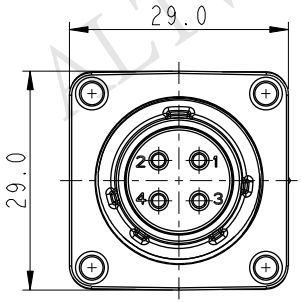

ALTW
QCC. DEPT.
CONFIDENTIAL
2016.05.13
ISSUED

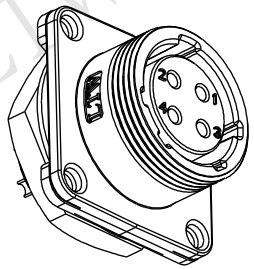

Assembly Instruction

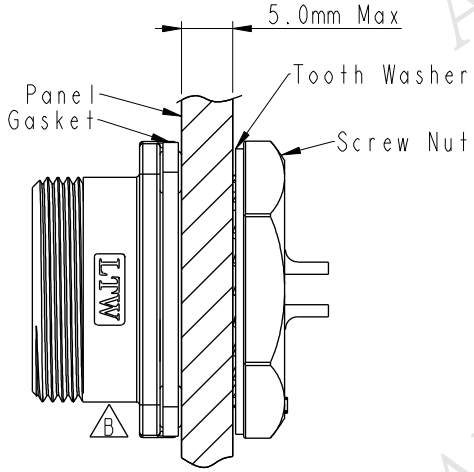

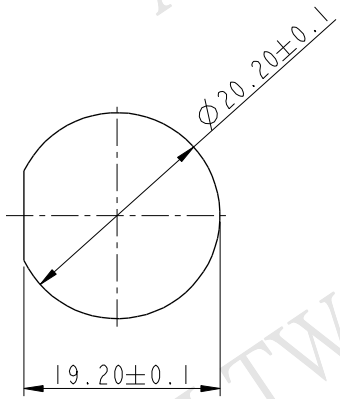

Recommend Panel Cut-Out

△C Note:
* QC Important Dimension.
* Waterproof Rate: IP68.
  IP68: IM depth of water in 24 Hrs.
  (防水等級:IP68)
  IP68:水深一米測試 24 小時
* Shell: Zinc Alloy ,Electrodeposition Coating ,Black.
* Insulation: Nylon ,Black.
* Female Pin: Copper Alloy ,Gold Plated.
* Gasket: Silicone ,Gray.
* Recommended Panel Thickness 5.0mm(Max).

UNIT:mm

TOLERANCE
.X ±0.25
.XX ±0.1
.XXX ±0.05
ANGLES ±1°

TITLE: PANEL NUT 4PIN M CONN F PIN
SCALE: 1:1 | SIZE: A4 | SHEET: 1 OF 1
REV.: C | WC-REV.: A.3 | QC: Inspection item

Amphenol LTW
安費諾亮泰企業股份有限公司

ITEM NO: HB20-04PMFS-SN8001	DRAWN BY: Vicky	DATE: 2016-05-03
DWG NO: HB20-04PMFS-SN8001	CHECKED BY: Rita	DATE: 2016-05-03
CUSTOMER: ALTW	APPROVED BY: Lisa	DATE: 2016-05-03

FMW10702-01-02A1

THIS DOCUMENT IS SUBJECT TO CHANGE WITHOUT NOTICE. IT IS CONFIDENTIAL AND A PROPERTY OF Amphenol LTW. DISCLOSURE TO THIRD PARTY HAS TO BE AUTHORIZED BY Amphenol LTW.

Mouser Electronics

Authorized Distributor

Click to View Pricing, Inventory, Delivery & Lifecycle Information:

Amphenol:
HB20-04PMFS-SN8001