1 Product Identification

GDNR	4030	-	2R2	M	T	F
①	②		③	④	⑤	⑥

① Product Symbol

② Dimensions（See two）

③ Inductance Value (2R2:2.2μH)

④ Inductance Tolerance (J:±5%;K:±10%; M:±20%; N:±30%)

⑤ Packaging Style (B: Bulk; T: Tape & Reel)

⑥ Lead Free

2 Appearance, Dimensions(mm)

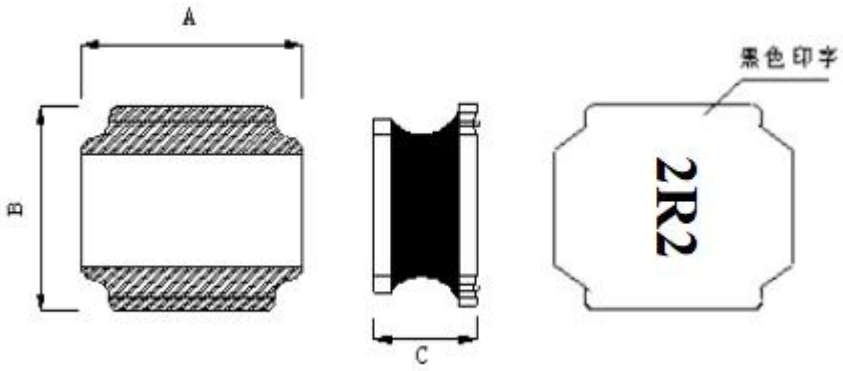

A	B	C
4.0±0.2	4.0±0.2	3.0 Max

LAND PATTERN DIMENSIONS

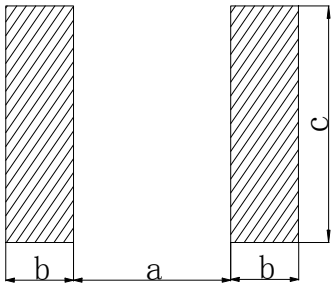

/	mm
a	1.9
b	1.1
c	3.7

3 Specifications

Part No.	Inductance L0(uH) @100KHz/1V	RDC (mΩ)	Saturation Current (A)Max	Heat Rating Current (A)Max
GDNR4030-1R0MTF	1.0 ±20%	24±30%	5.8	2.96
GDNR4030-1R5MTF	1.5 ±20%	30±30%	4.84	2.9
GDNR4030-2R2MTF	2.2 ±20%	35±30%	4.9	2.57
GDNR4030-4R7MTF	4.7 ±20%	60±30%	2.9	2.0
GDNR4030-680KTF	68±10%	868±30%	0.75	0.52
GDNR4030-221MTF	220 ±20%	2500±30%	0.4	0.35

※ Note

*Rated current is the DC current that reduces the initial inductance by 30% or when the temperature rises △ T = 40℃

4 Packaging

(1) Dimensions of Reel（mm）

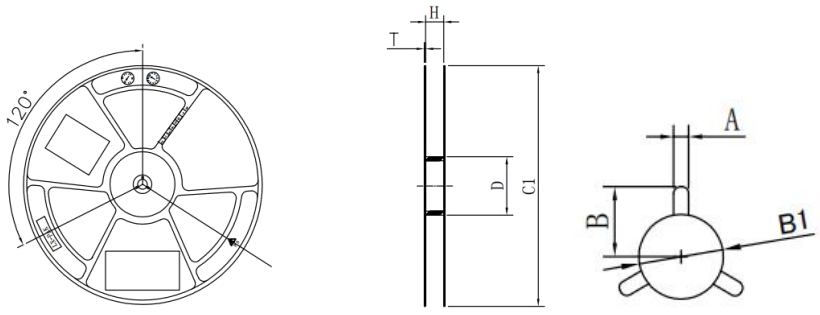

	Size（mm）
C1	330 ± 3.0
H	12.8 ± 0.5
A	2.5± 0.3
B	10.75 ± 0.3
B1	13+0.5/-0.2
T	2.0 ± 0.2
D	100±1.0

(2) Dimensions of Tape (mm):

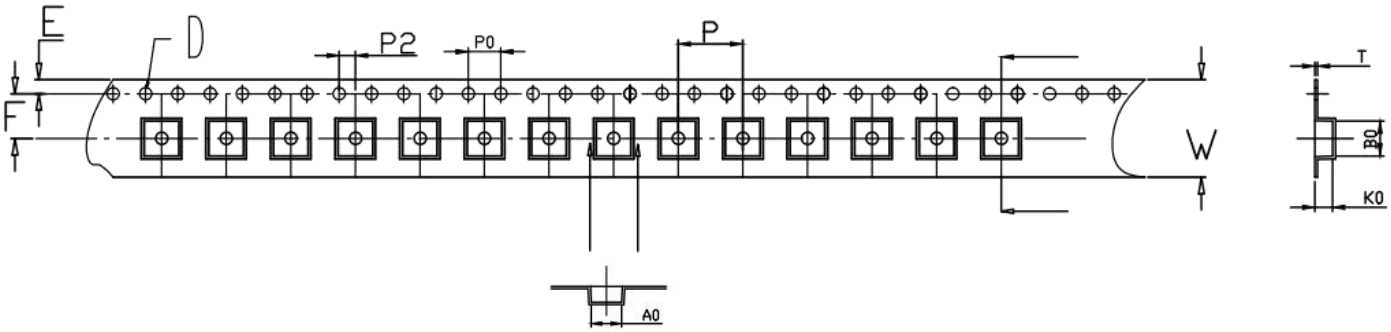

W	A0	B0	K0	P	F	E	D	P0	P2	T	Packaging quantity
12.0 ±0.3	4.3 ±0.1	4.3 ±0.1	3.0 ±0.1	8.0 ±0.1	5.5 ±0.1	1.75 ±0.1	1.5+ 0.1/-0.0	4.0 ±0.1	2.0 ±0.1	0.35 ±0.05	2000PCS/REEL