- **3-State Outputs Interface Directly With System Bus**
- **Provides Bus Interface From Multiple Sources in High-Performance Systems**
- **Package Options Include Plastic Small-Outline Packages, Ceramic Chip Carriers, and Standard Plastic and Ceramic 300-mil DIPs**

SN54F258 . . . J PACKAGE
SN74F258 . . . D OR N PACKAGE
(TOP VIEW)

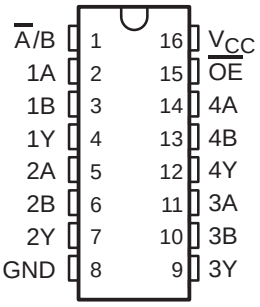

SN54F258 . . . FK PACKAGE
(TOP VIEW)

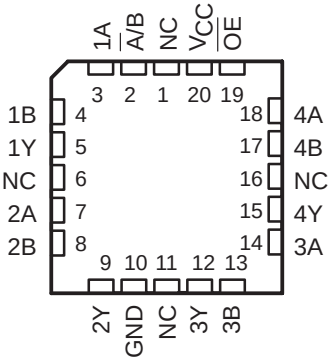

NC – No internal connection

description

The ′F258 is designed to multiplex signals from 4-bit data sources to 4-output data lines in bus-organized systems. The 3-state outputs will not load the data lines when the output-enable ($\overline{OE}$) input is at a high logic level.

The SN54F258 is characterized for operation over the full military temperature range of –55°C to 125°C. The SN74F258 is characterized for operation from 0°C to 70°C.

FUNCTION TABLE

INPUTS				OUTPUT
$\overline{OE}$	$\overline{A}$/B	A	B	Y
H	X	X	X	Z
L	L	L	X	H
L	L	H	X	L
L	H	X	L	H
L	H	X	H	L

logic symbol†

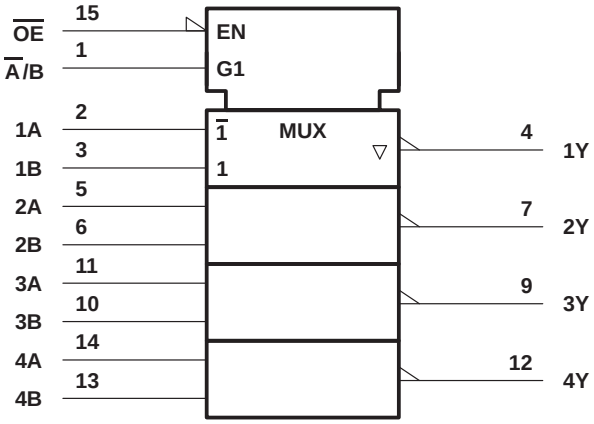

† This symbol is in accordance with ANSI/IEEE Std 91-1984 and IEC Publication 617-12.
Pin numbers shown are for the D, J, and N packages.

PRODUCTION DATA information is current as of publication date. Products conform to specifications per the terms of Texas Instruments standard warranty. Production processing does not necessarily include testing of all parameters.

Copyright © 1993, Texas Instruments Incorporated

logic diagram (positive logic)

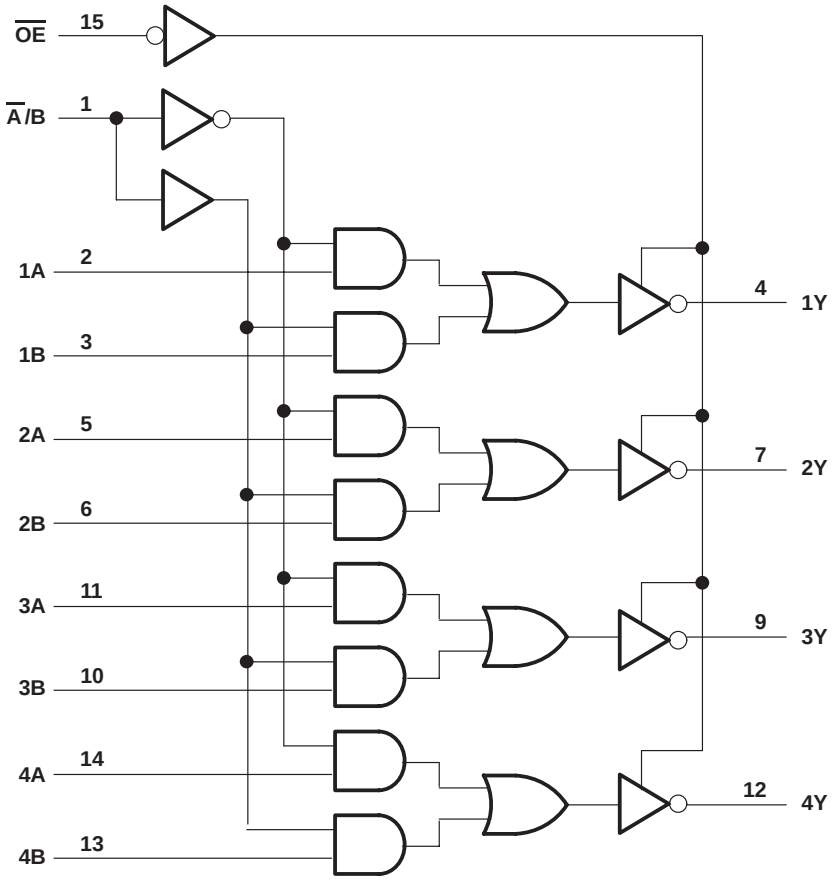

Pin numbers shown are for the D, J, and N packages.

absolute maximum ratings over operating free-air temperature range (unless otherwise noted)†

Supply voltage range, V_{CC} . . . . . –0.5 V to 7 V
Input voltage range (see Note 1) . . . . . –1.2 V to 7 V
Input current range . . . . . –30 mA to 5 mA
Voltage range applied to any output in the disabled or power-off state . . . . . –0.5 V to 5.5 V
Voltage range applied to any output in the high state . . . . . –0.5 V to V_{CC}
Current into any output in the low state: SN54F258 . . . . . 40 mA
SN74F258 . . . . . 48 mA
Operating free-air temperature range: SN54F258 . . . . . –55°C to 125°C
SN74F258 . . . . . 0°C to 70°C
Storage temperature range . . . . . –65°C to 150°C

† Stresses beyond those listed under “absolute maximum ratings” may cause permanent damage to the device. These are stress ratings only and functional operation of the device at these or any other conditions beyond those indicated under “recommended operating conditions” is not implied. Exposure to absolute-maximum-rated conditions for extended periods may affect device reliability.

NOTE 1: The input voltage ratings may be exceeded provided the input current ratings are observed.

recommended operating conditions

		SN54F258			SN74F258			UNIT
		MIN	NOM	MAX	MIN	NOM	MAX	
V_{CC}	Supply voltage	4.5	5	5.5	4.5	5	5.5	V
V_{IH}	High-level input voltage	2			2			V
V_{IL}	Low-level input voltage			0.8			0.8	V
I_{IK}	Input clamp current			–18			–18	mA
I_{OH}	High-level output current			– 3			– 3	mA
I_{OL}	Low-level output current			20			24	mA
T_A	Operating free-air temperature	–55		125	0		70	°C

electrical characteristics over recommended operating free-air temperature range (unless otherwise noted)

PARAMETER	TEST CONDITIONS		SN54F258			SN74F258			UNIT
			MIN	TYP†	MAX	MIN	TYP†	MAX	
V_{IK}	V_{CC} = 4.5 V,	I_I = –18 mA			–1.2			–1.2	V
V_{OH}	V_{CC} = 4.5 V	I_{OH} = – 1 mA	2.5	3.4		2.5	3.4		V
		I_{OH} = – 3 mA	2.4	3.3		2.4	3.3		
	V_{CC} = 4.75 V,	I_{OH} = – 1 mA to –3 mA				2.7			
V_{OL}	V_{CC} = 4.5 V	I_{OL} = 20 mA		0.3	0.5				V
		I_{OL} = 24 mA					0.35	0.5	
I_{OZH}	V_{CC} = 5.5 V,	V_O = 2.7 V			50			50	µA
I_{OZL}	V_{CC} = 5.5 V,	V_O = 0.5 V			–50			–50	µA
I_I	V_{CC} = 5.5 V,	V_I = 7 V			0.1			0.1	mA
I_{IH}	V_{CC} = 5.5 V,	V_I = 2.7 V			20			20	µA
I_{IL}	V_{CC} = 5.5 V,	V_I = 0.5 V			– 0.6			– 0.6	mA
I_{OS}‡	V_{CC} = 5.5 V,	V_O = 0	–60		–150	–60		–150	mA
I_{CCH}	V_{CC} = 5.5 V, See Note 2	Condition A		6.2	9.5		6.2	9.5	mA
I_{CCL}		Condition B		15.1	23		15.1	23	
I_{CCZ}		Condition C		11.3	17		11.3	17	

† All typical values are at V_{CC} = 5 V, T_A = 25°C.
‡ Not more than one output should be shorted at a time, and the duration of the short circuit should not exceed one second.
NOTE 2: I_{CC} is measured with the outputs open under the following conditions:
A. All B inputs at 4.5 V, other inputs grounded
B. $\overline{A}$/B and all B inputs at 4.5 V, other inputs grounded
C. $\overline{OE}$ and all B inputs at 4.5 V, other inputs grounded

switching characteristics (see Note 3)

PARAMETER	FROM (INPUT)	TO (OUTPUT)	V_{CC} = 5 V, C_L = 50 pF, R1 = 500 Ω, R2 = 500 Ω, T_A = 25°C			V_{CC} = 4.5 V to 5.5 V, C_L = 50 pF, R1 = 500 Ω, R2 = 500 Ω, T_A = MIN to MAX†				UNIT
			′F258			SN54F258		SN74F258		
			MIN	TYP	MAX	MIN	MAX	MIN	MAX	
t_{PLH}	Data (A or B)	Any Y	1	3.6	5.3	1	7.5	1	6	ns
t_{PHL}			1	3.1	4.7	1	6	1	5.5	
t_{PLH}	A/B	Any Y	3.2	6.1	8.5	3.2	12	3.2	9.5	ns
t_{PHL}			3.2	6.9	9.5	3.2	11.5	3.2	11	
t_{PZH}	G	Any Y	2.2	5.5	7.5	2.2	11	2.2	8.5	ns
t_{PZL}			2.2	5.1	7.5	2.2	9.5	2.2	8.5	
t_{PHZ}	$\overline{G}$	Any Y	1.2	3.9	6	1	7	1.2	7	ns
t_{PLZ}			1.2	4.1	6	1.2	9	1.2	7	

† For conditions shown as MIN or MAX, use the appropriate value specified under recommended operating conditions.

NOTE 3: Load circuits and waveforms are shown in Section 1.

IMPORTANT NOTICE

Texas Instruments and its subsidiaries (TI) reserve the right to make changes to their products or to discontinue any product or service without notice, and advise customers to obtain the latest version of relevant information to verify, before placing orders, that information being relied on is current and complete. All products are sold subject to the terms and conditions of sale supplied at the time of order acknowledgement, including those pertaining to warranty, patent infringement, and limitation of liability.

TI warrants performance of its semiconductor products to the specifications applicable at the time of sale in accordance with TI's standard warranty. Testing and other quality control techniques are utilized to the extent TI deems necessary to support this warranty. Specific testing of all parameters of each device is not necessarily performed, except those mandated by government requirements.

CERTAIN APPLICATIONS USING SEMICONDUCTOR PRODUCTS MAY INVOLVE POTENTIAL RISKS OF DEATH, PERSONAL INJURY, OR SEVERE PROPERTY OR ENVIRONMENTAL DAMAGE ("CRITICAL APPLICATIONS"). TI SEMICONDUCTOR PRODUCTS ARE NOT DESIGNED, AUTHORIZED, OR WARRANTED TO BE SUITABLE FOR USE IN LIFE-SUPPORT DEVICES OR SYSTEMS OR OTHER CRITICAL APPLICATIONS. INCLUSION OF TI PRODUCTS IN SUCH APPLICATIONS IS UNDERSTOOD TO BE FULLY AT THE CUSTOMER'S RISK.

In order to minimize risks associated with the customer's applications, adequate design and operating safeguards must be provided by the customer to minimize inherent or procedural hazards.

TI assumes no liability for applications assistance or customer product design. TI does not warrant or represent that any license, either express or implied, is granted under any patent right, copyright, mask work right, or other intellectual property right of TI covering or relating to any combination, machine, or process in which such semiconductor products or services might be or are used. TI's publication of information regarding any third party's products or services does not constitute TI's approval, warranty or endorsement thereof.

Copyright © 1998, Texas Instruments Incorporated

Unikeyic Electronics

Global Electronic Components Distributor

Click to view pricing, inventory, delivery, and lifecycle information:

Texas Instruments:

LM4050CEM3-5.0 TPS25200DRVR TPS3307-25DGNR ISO124U/1K TL074IDR TLV2451IDBVR DRV8821DCA SN74ALS1640AN SN74ALVC244PWE4 LM311PW OPA643P SN74ACT7807-20FN SN74AS832BDW TL750L12CP TPS2835PWPR UCC3752D INA228AIDGSR SN74ACT3631-15PQ THMC50DBQR TPS3809I50DBVR OPA2330AIDRBT SN74ALS258ADR SN74AS1034ANSR LM5110-2M/NOPB MSP430F5438AIPZR SN74ALS257AD TPA005D14DCA TVP5150AM1PBSR BQ25616RTWR RI-I02-114B-01