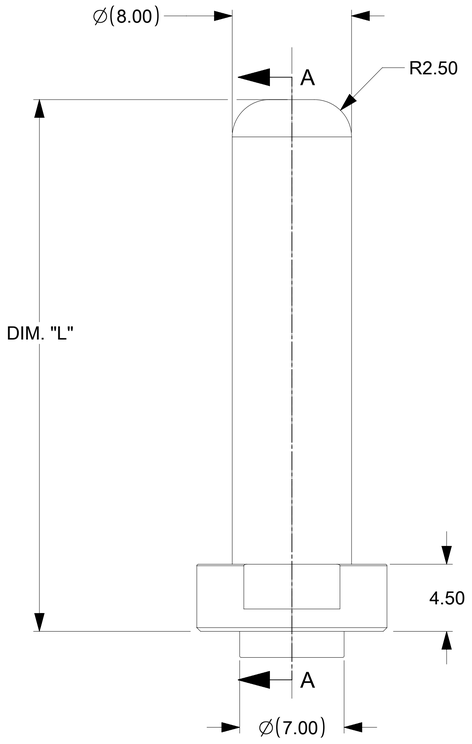

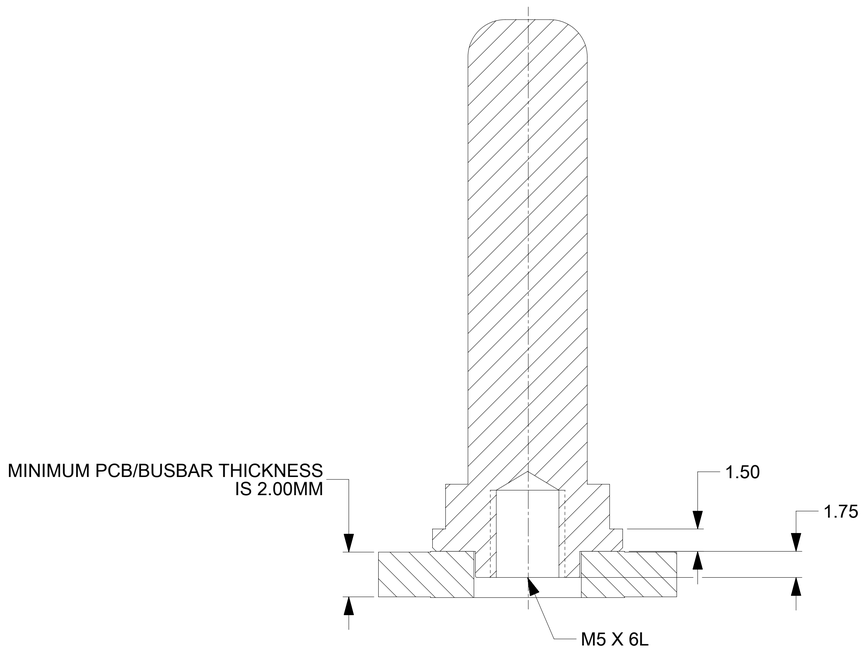

SECTION A-A

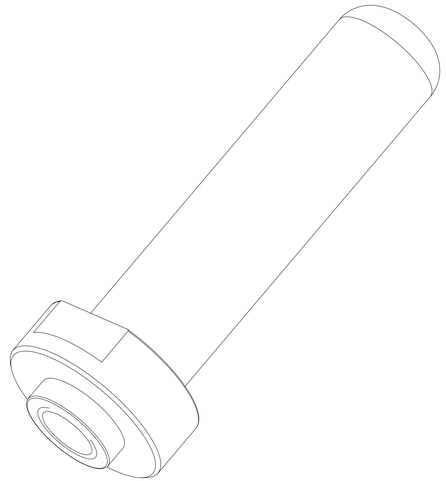

PART NUMBER	DIMENSION "L"
2032634085	45.65
2032634185	35.65
2032634285	20.65
2032634385	30.65
2032634485	29.15
2032634585	25.50
2032634685	43.65
2032634785	40.35
2032634885	16.65
2032634985	66.50
2032637085	85.65
2032637185	55.00
2032637285	15.00
2032637385	13.75
2032637485	65.80
2032637585	16.00
2032637685	20.00
2032637785	26.00
2032637885	36.00
2032637985	48.00
2032639085	39.00
D7 2032639185	22.00

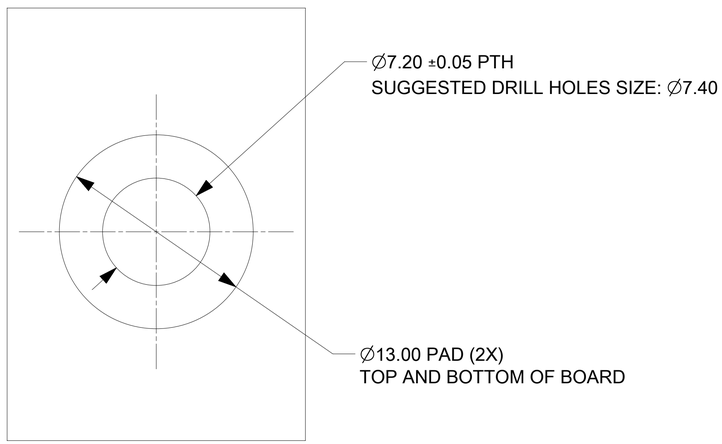

RECOMMENDED PCB OR BUSBAR LAYOUT

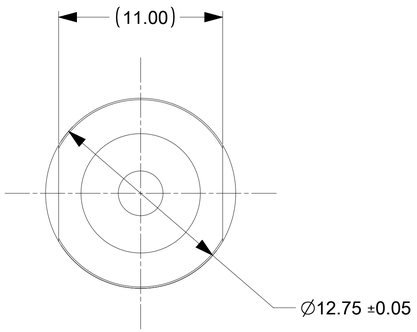

NOTES :

1. MATERIALS:
   BASE METAL: HIGH CONDUCTIVE COPPER ALLOY
   PLATING ON BODY: 3.18 MICRON MIN SILVER OVER 1.27 MICRON MIN NICKEL
2. PRODUCT SPECIFICATION: 2043130001-PS
3. APPLICATION SPECIFICATION: 2043130001-AS
4. PARTS TO BE PACKAGED AS PER PACKAGING SPECIFICATION: 2032630006-PK
5. SILVER COMPONENTS WILL BE SUPPLIED TARNISH FREE BUT MAY TARNISH OVER TIME.
6. PART TO BE MOUNTED WITH CONDUCTIVE M5 SCREW AND CONDUCTIVE BELLEVILLE WASHER FOR OPTIMAL PERFORMANCE
7. SCREW LENGTH TO BE DETERMINED BY CUSTOMER, SCREWS AND WASHERS ARE NOT SUPPLIED BY MOLEX.

THIS DRAWING CONTAINS INFORMATION THAT IS PROPRIETARY TO MOLEX ELECTRONIC TECHNOLOGIES, LLC AND SHOULD NOT BE USED WITHOUT WRITTEN PERMISSION

DIMENSION UNITS	SCALE
mm	5:1

GENERAL TOLERANCES (UNLESS SPECIFIED)

ANGULAR TOL	±	0.5 °
4 PLACES	±	
3 PLACES	±	
2 PLACES	±	0.2
1 PLACE	±	0.25
0 PLACES	±	

DRAFT WHERE APPLICABLE MUST REMAIN WITHIN DIMENSIONS

CURRENT REV DESC: ADDED P/NO 9185

EC NO: 773885

DRWN:	SACHIK7	2023/12/15
CHK'D:	SACHIK7	2024/02/22
APPR:	MBELLE	2024/03/04

INITIAL REVISION:

DRWN:	JJONIAK	2018/10/10
APPR:	BPISZCZOR	2019/03/22

THIRD ANGLE PROJECTION | DRAWING: D-SIZE | SERIES: 203263

molex

SENTRALITY 8.00MM MALE TERMINAL
SCREW MOUNT

PRODUCT CUSTOMER DRAWING

DOCUMENT NUMBER	DOC TYPE	DOC PART	REVISION
2032634185-SD	PSD	000	D7

MATERIAL NUMBER	CUSTOMER	SHEET NUMBER
SEE TABLE	GENERAL MARKET	1 OF 1

DOCUMENT STATUS	P1	RELEASE DATE	2024/03/04 14:46:22