Thank you for your interest in **onsemi** products.

Your technical document begins on the following pages.

Your Feedback is Important to Us!

Please take a moment to participate in our short survey.
At **onsemi**, we are dedicated to delivering technical content that best meets your needs.

Help Us Improve – Take the Survey

This survey is intended to collect your feedback, capture any issues you may encounter, and to provide improvements you would like to suggest.

We look forward to your feedback.

To learn more about **onsemi**, please visit our website at
www.onsemi.com

onsemi and onsemi and other names, marks, and brands are registered and/or common law trademarks of Semiconductor Components Industries, LLC dba "**onsemi**" or its affiliates and/or subsidiaries in the United States and/or other countries. **onsemi** owns the rights to a number of patents, trademarks, copyrights, trade secrets, and other intellectual property. A listing of **onsemi** product/patent coverage may be accessed at www.onsemi.com/site/pdf/Patent-Marking.pdf. **onsemi** reserves the right to make changes at any time to any products or information herein, without notice. The information herein is provided "as-is" and **onsemi** makes no warranty, representation or guarantee regarding the accuracy of the information, product features, availability, functionality, or suitability of its products for any particular purpose, nor does **onsemi** assume any liability arising out of the application or use of any product or circuit, and specifically disclaims any and all liability, including without limitation special, consequential or incidental damages. Buyer is responsible for its products and applications using **onsemi** products, including compliance with all laws, regulations and safety requirements or standards, regardless of any support or applications information provided by **onsemi**. "Typical" parameters which may be provided in **onsemi** data sheets and/or specifications can and do vary in different applications and actual performance may vary over time. All operating parameters, including "Typicals" must be validated for each customer application by customer's technical experts. **onsemi** does not convey any license under any of its intellectual property rights nor the rights of others. **onsemi** products are not designed, intended, or authorized for use as a critical component in life support systems or any FDA Class 3 medical devices or medical devices with a same or similar classification in a foreign jurisdiction or any devices intended for implantation in the human body. Should Buyer purchase or use **onsemi** products for any such unintended or unauthorized application, Buyer shall indemnify and hold **onsemi** and its officers, employees, subsidiaries, affiliates, and distributors harmless against all claims, costs, damages, and expenses, and reasonable attorney fees arising out of, directly or indirectly, any claim of personal injury or death associated with such unintended or unauthorized use, even if such claim alleges that **onsemi** was negligent regarding the design or manufacture of the part. **onsemi** is an Equal Opportunity/Affirmative Action Employer. This literature is subject to all applicable copyright laws and is not for resale in any manner. Other names and brands may be claimed as the property of others.

MOSFET – Power, N-Channel, SUPERFET® III, Easy Drive

650 V, 24 A, 125 mΩ

FCH125N65S3R0

V_{DSS}	$R_{DS(ON)}$ MAX	I_D MAX
650 V	125 mΩ @ 10 V	24 A

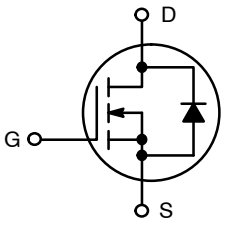

N-Channel MOSFET

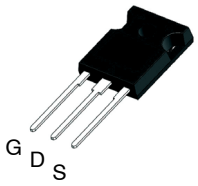

TO−247−3LD
CASE 340CH

Description

SUPERFET III MOSFET is **onsemi**'s brand-new high voltage super-junction (SJ) MOSFET family that is utilizing charge balance technology for outstanding low on-resistance and lower gate charge performance. This advanced technology is tailored to minimize conduction loss, provide superior switching performance, and withstand extreme dv/dt rate. Consequently, SUPERFET III MOSFET Easy drive series helps manage EMI issues and allows for easier design implementation.

Features

- 700 V @ T_J = 150°C
- Typ. $R_{DS(on)}$ = 105 mΩ
- Ultra Low Gate Charge (Typ. Q_g = 46 nC)
- Low Effective Output Capacitance (Typ. $C_{oss(eff.)}$ = 439 pF)
- 100% Avalanche Tested
- These Devices are Pb−Free and are RoHS Compliant

Applications

- Telecom / Server Power Supplies
- Industrial Power Supplies
- UPS / Solar

MARKING DIAGRAM

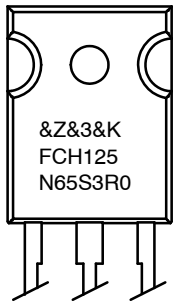

&Z	= Assembly Plant Code
&3	= Numeric Date Code
&K	= Lot Code
FCH125N65S3R0	= Specific Device Code

ORDERING INFORMATION

See detailed ordering and shipping information on page 2 of this data sheet.

© Semiconductor Components Industries, LLC, 2017

ABSOLUTE MAXIMUM RATINGS (T_C = 25°C, Unless otherwise specified)

Symbol	Parameter		Value	Unit
V_{DSS}	Drain to Source Voltage		650	V
V_{GSS}	Gate to Source Voltage	DC	±30	V
		AC (f > 1 Hz)	±30	V
I_D	Drain Current	Continuous (T_C = 25°C)	24	A
		Continuous (T_C = 100°C)	15	
I_{DM}	Drain Current	Pulsed (Note 1)	60	A
E_{AS}	Single Pulsed Avalanche Energy (Note 2)		115	mJ
I_{AS}	Avalanche Current (Note 2)		3.7	A
E_{AR}	Repetitive Avalanche Energy (Note 1)		1.81	mJ
dv/dt	MOSFET dv/dt		100	V/ns
	Peak Diode Recovery dv/dt (Note 3)		20	
P_D	Power Dissipation	(T_C = 25°C)	181	W
		Derate Above 25°C	1.45	W/°C
T_J, T_{STG}	Operating and Storage Temperature Range		−55 to +150	°C
T_L	Maximum Lead Temperature for Soldering, 1/8″ from Case for 5 s		300	°C

Stresses exceeding those listed in the Maximum Ratings table may damage the device. If any of these limits are exceeded, device functionality should not be assumed, damage may occur and reliability may be affected.

1. Repetitive rating: pulse-width limited by maximum junction temperature.
2. I_{AS} = 3.7 A, R_G = 25 Ω, starting T_J = 25°C.
3. I_{SD} ≤ 12 A, di/dt ≤ 200 A/μs, V_{DD} ≤ 400 V, starting T_J = 25°C.

THERMAL CHARACTERISTICS

Symbol	Parameter	Value	Unit
$R_{\theta JC}$	Thermal Resistance, Junction to Case, Max.	0.69	°C/W
$R_{\theta JA}$	Thermal Resistance, Junction to Ambient, Max.	40	

PACKAGE MARKING AND ORDERING INFORMATION

Part Number	Top Marking	Package	Quantity
FCH125N65S3R0−F155	FCH125N65S3R0	TO−247−3LD (Pb-Free)	30 Units / Tube

ELECTRICAL CHARACTERISTICS (T_C = 25°C unless otherwise noted)

Symbol	Parameter	Test Conditions	Min	Typ	Max	Unit
OFF CHARACTERISTICS						
BV_{DSS}	Drain to Source Breakdown Voltage	V_{GS} = 0 V, I_D = 1 mA, T_J = 25°C	650			V
		V_{GS} = 0 V, I_D = 1 mA, T_J = 150°C	700			V
$\Delta BV_{DSS}/\Delta T_J$	Breakdown Voltage Temperature Coefficient	I_D = 1 mA, Referenced to 25°C		0.68		V/°C
I_{DSS}	Zero Gate Voltage Drain Current	V_{DS} = 650 V, V_{GS} = 0 V			1	μA
		V_{DS} = 520 V, T_C = 125°C		1.35		
I_{GSS}	Gate to Body Leakage Current	V_{GS} = ±30 V, V_{DS} = 0 V			±100	nA
ON CHARACTERISTICS						
$V_{GS(th)}$	Gate Threshold Voltage	V_{GS} = V_{DS}, I_D = 0.59 mA	2.5		4.5	V
$R_{DS(on)}$	Static Drain to Source On Resistance	V_{GS} = 10 V, I_D = 12 A		105	125	mΩ
g_{FS}	Forward Transconductance	V_{DS} = 20 V, I_D = 12 A		16		S
DYNAMIC CHARACTERISTICS						
C_{iss}	Input Capacitance	V_{DS} = 400 V, V_{GS} = 0 V, f = 1 MHz		1940		pF
C_{oss}	Output Capacitance			40		pF
$C_{oss(eff.)}$	Effective Output Capacitance	V_{DS} = 0 V to 400 V, V_{GS} = 0 V		439		pF
$C_{oss(er.)}$	Energy Related Output Capacitance	V_{DS} = 0 V to 400 V, V_{GS} = 0 V		62		pF
$Q_{g(tot)}$	Total Gate Charge at 10V	V_{DS} = 400 V, I_D = 12 A, V_{GS} = 10 V (Note 4)		46		nC
Q_{gs}	Gate to Source Gate Charge			12		nC
Q_{gd}	Gate to Drain “Miller” Charge			19		nC
ESR	Equivalent Series Resistance	f = 1 MHz		0.5		Ω
SWITCHING CHARACTERISTICS						
$t_{d(on)}$	Turn-On Delay Time	V_{DD} = 400 V, I_D = 12 A, V_{GS} = 10 V, R_g = 4.7 Ω (Note 4)		21		ns
t_r	Turn-On Rise Time			19		ns
$t_{d(off)}$	Turn-Off Delay Time			48		ns
t_f	Turn-Off Fall Time			4.6		ns
SOURCE-DRAIN DIODE CHARACTERISTICS						
I_S	Maximum Continuous Source to Drain Diode Forward Current				24	A
I_{SM}	Maximum Pulsed Source to Drain Diode Forward Current				60	A
V_{SD}	Source to Drain Diode Forward Voltage	V_{GS} = 0 V, I_{SD} = 12 A			1.2	V
t_{rr}	Reverse Recovery Time	V_{DD} = 400 V, I_{SD} = 12 A, dI_F/dt = 100 A/μs		339		ns
Q_{rr}	Reverse Recovery Charge			5.7		μC

Product parametric performance is indicated in the Electrical Characteristics for the listed test conditions, unless otherwise noted. Product performance may not be indicated by the Electrical Characteristics if operated under different conditions.

4. Essentially independent of operating temperature typical characteristics.

TYPICAL PERFORMANCE CHARACTERISTICS

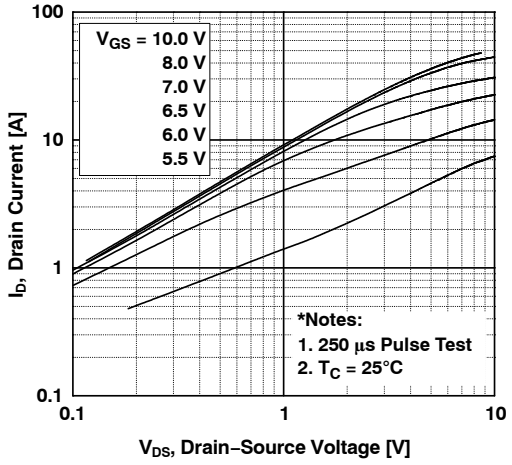

Figure 1. On-Region Characteristics

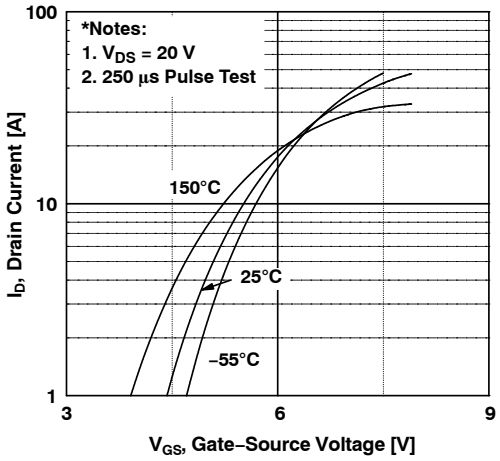

Figure 2. Transfer Characteristics

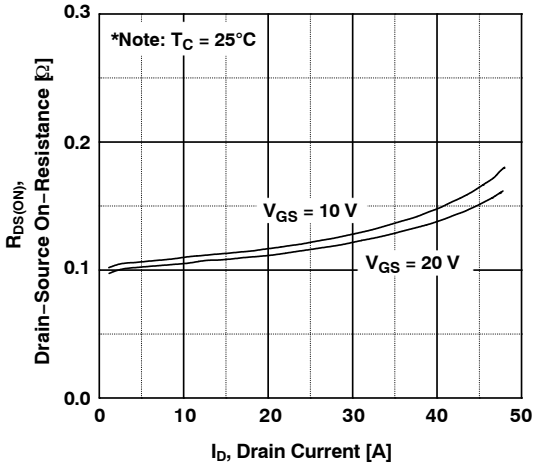

Figure 3. On-Resistance Variation vs. Drain Current and Gate Voltage

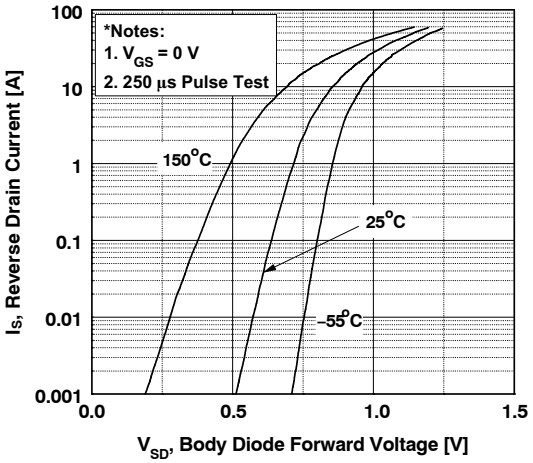

Figure 4. Body Diode Forward Voltage Variation vs. Source Current and Temperature

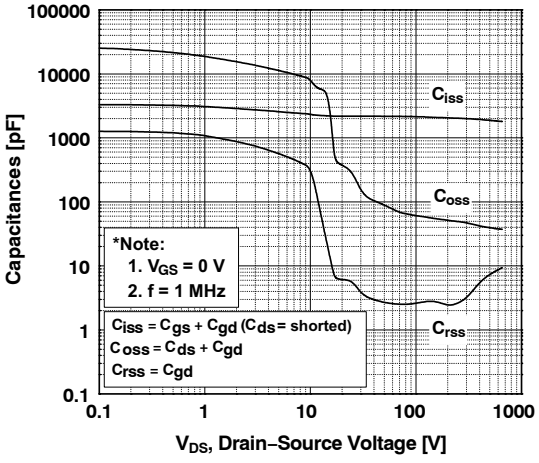

Figure 5. Capacitance Characteristics

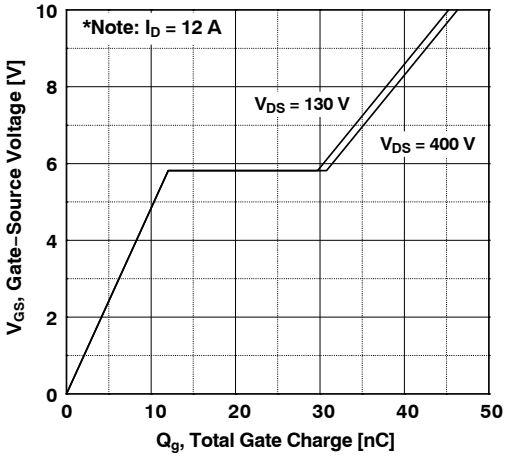

Figure 6. Gate Charge Characteristics

TYPICAL PERFORMANCE CHARACTERISTICS (Continued)

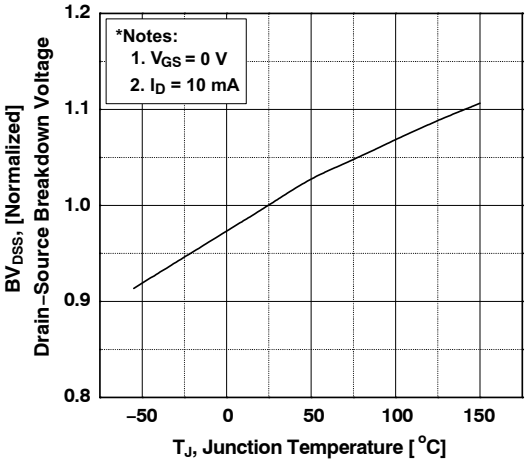

Figure 7. Breakdown Voltage Variation vs. Temperature

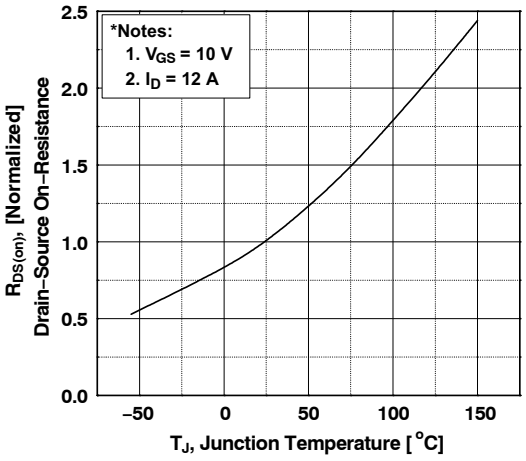

Figure 8. On-Resistance Variant vs. Temperature

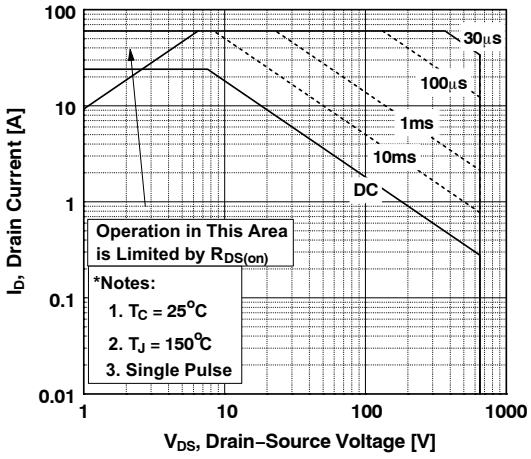

Figure 9. Maximum Safe Operation Area

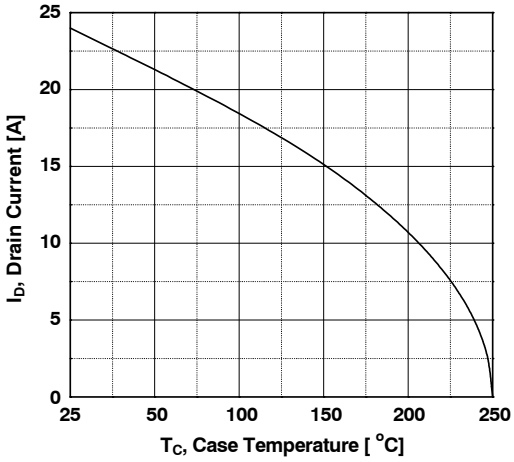

Figure 10. Maximum Drain Current vs. Case Temperature

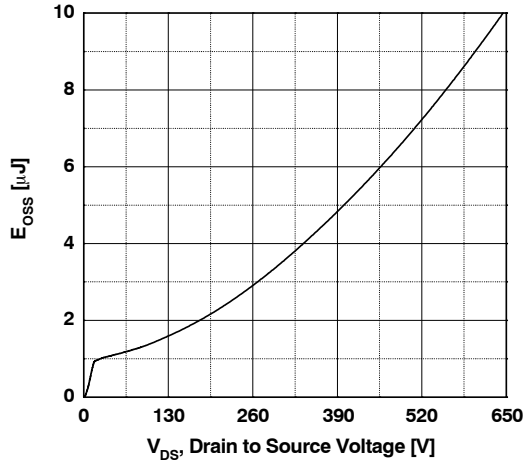

Figure 11. E_{OSS} vs. Drain to Source Voltage

TYPICAL PERFORMANCE CHARACTERISTICS (Continued)

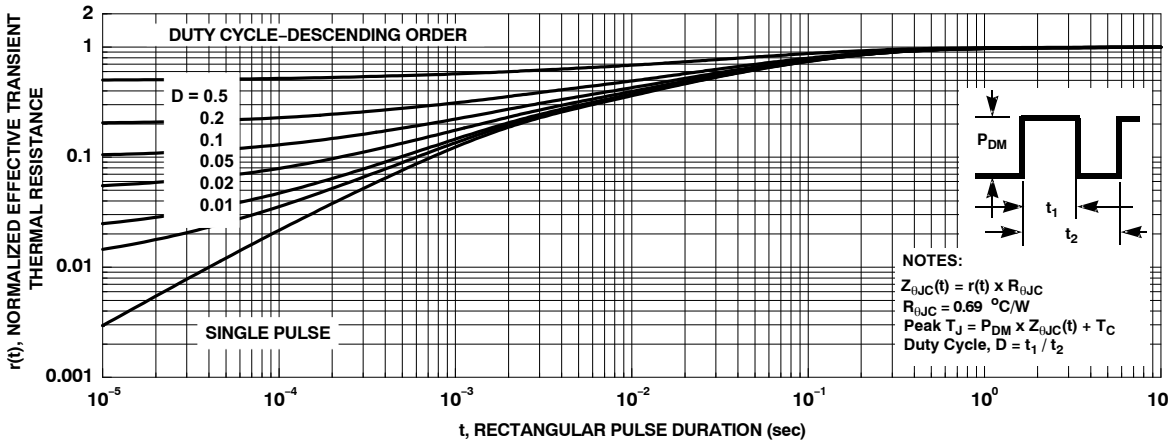

Figure 12. Transient Thermal Response Curve

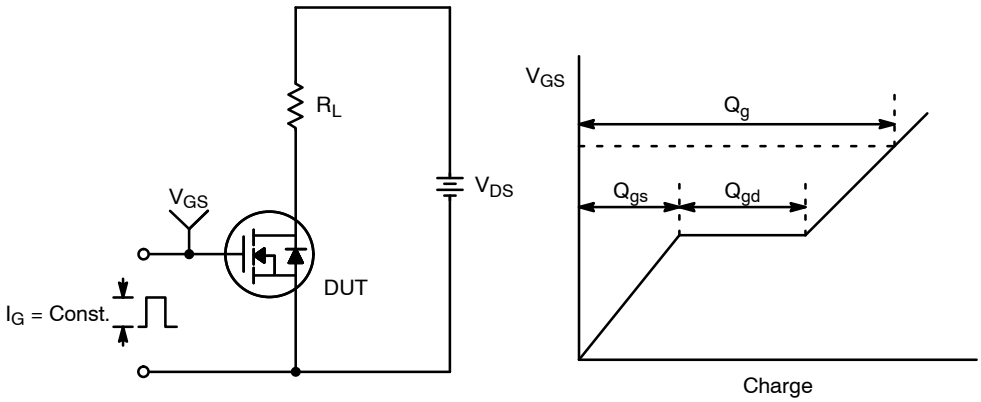

Figure 13. Gate Charge Test Circuit & Waveform

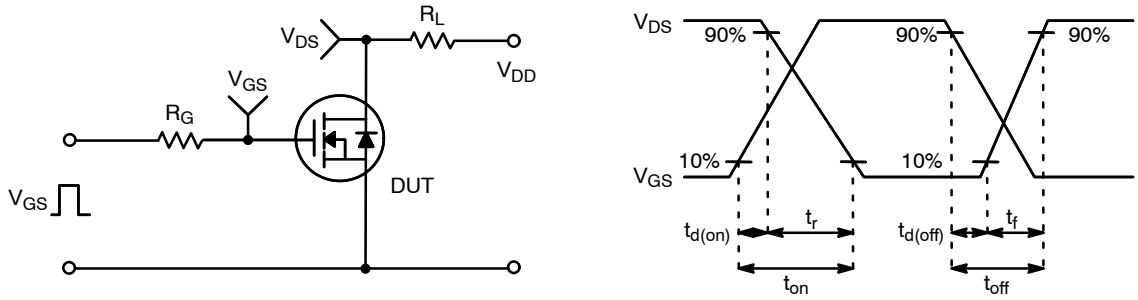

Figure 14. Resistive Switching Test Circuit & Waveforms

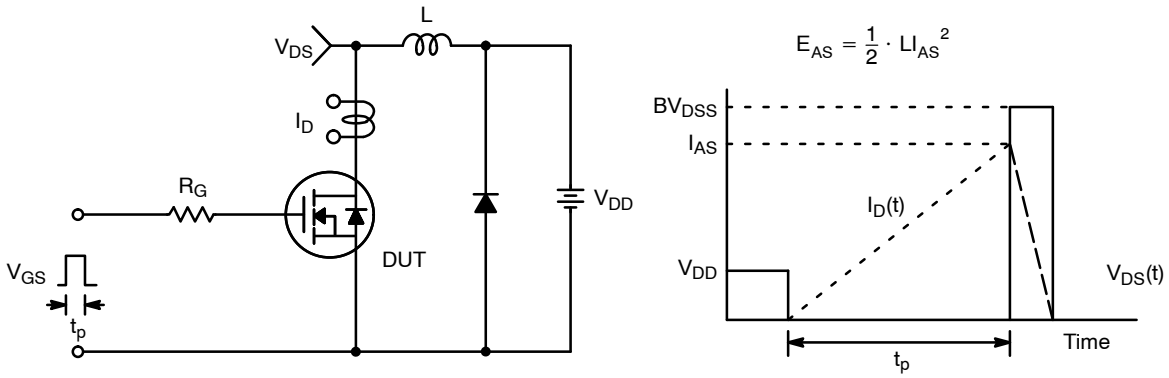

Figure 15. Unclamped Inductive Switching Test Circuit & Waveforms

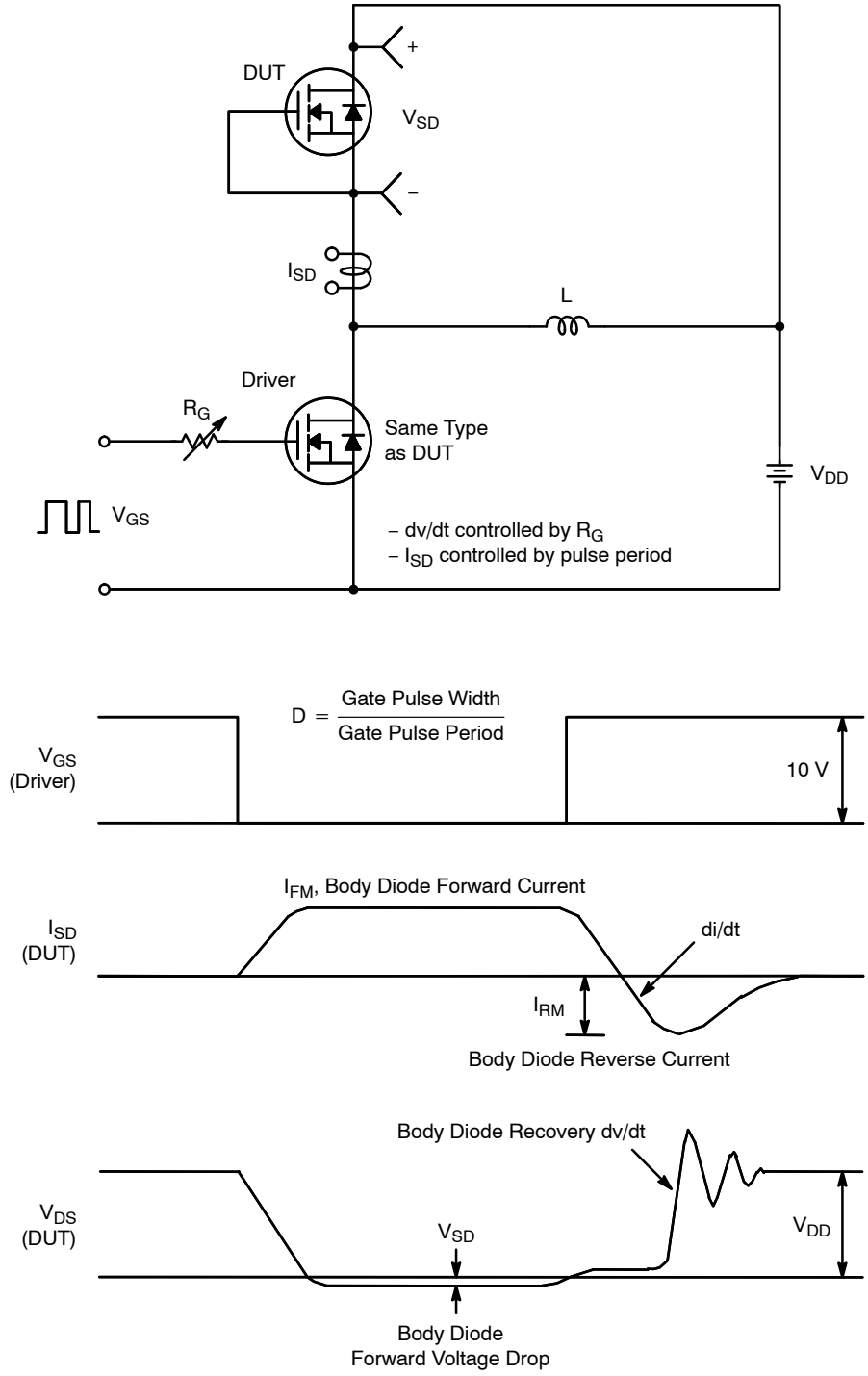

Figure 16. Peak Diode Recovery dt/dt Test Circuit & Waveforms

SUPERFET is a registered trademark of Semiconductor Components Industries, LLC dba "**onsemi**" or its affiliates and/or subsidiaries in the United States and/or other countries.

TO−247−3LD
CASE 340CH
ISSUE A

DATE 09 OCT 2019

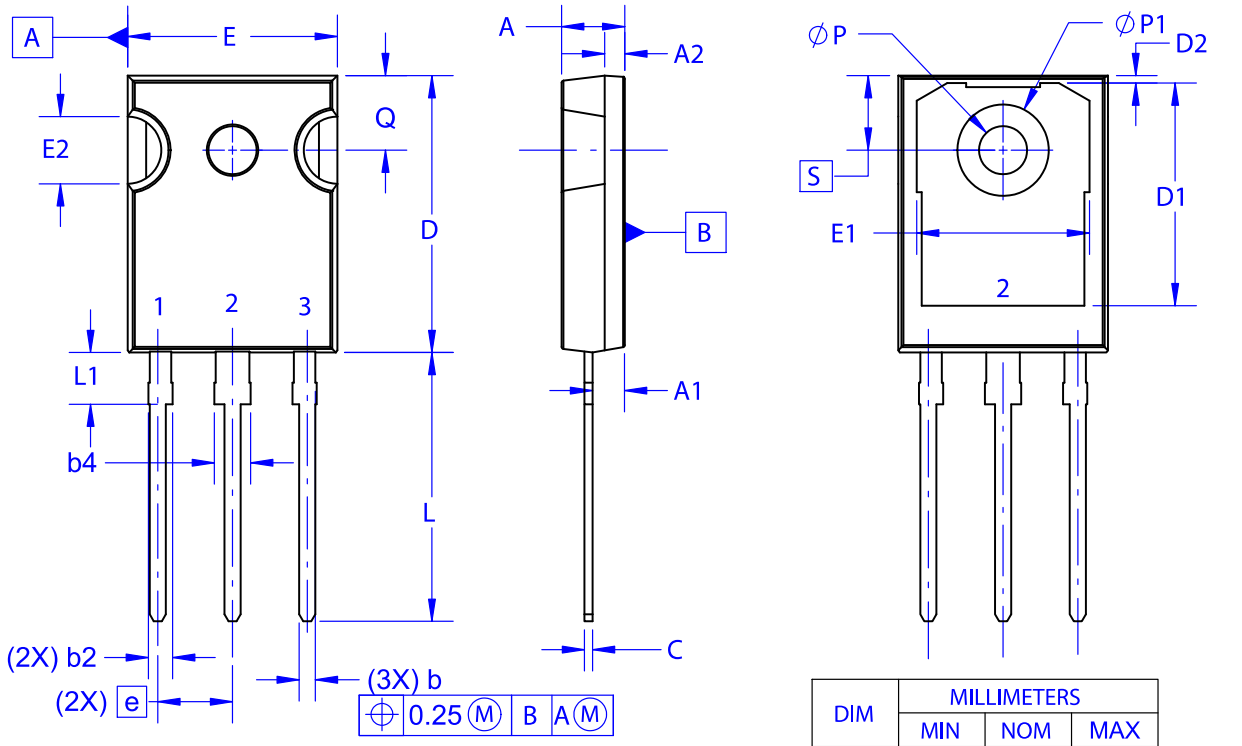

NOTES: UNLESS OTHERWISE SPECIFIED.

A. DIMENSIONS ARE EXCLUSIVE OF BURRS, MOLD FLASH, AND TIE BAR EXTRUSIONS.
B. ALL DIMENSIONS ARE IN MILLIMETERS.
C. DRAWING CONFORMS TO ASME Y14.5 - 2009.
D. DIMENSION A1 TO BE MEASURED IN THE REGION DEFINED BY L1.
E. LEAD FINISH IS UNCONTROLLED IN THE REGION DEFINED BY L1.

DIM	MILLIMETERS		
	MIN	NOM	MAX
A	4.58	4.70	4.82
A1	2.29	2.475	2.66
A2	1.40	1.50	1.60
D	20.32	20.57	20.82
E	15.37	15.62	15.87
E2	4.96	5.08	5.20
e	~	5.56	~
L	19.75	20.00	20.25
L1	3.69	3.81	3.93
ØP	3.51	3.58	3.65
Q	5.34	5.46	5.58
S	5.34	5.46	5.58
b	1.17	1.26	1.35
b2	1.53	1.65	1.77
b4	2.42	2.54	2.66
c	0.51	0.61	0.71
D1	13.08	~	~
D2	0.51	0.93	1.35
E1	12.81	~	~
ØP1	6.61	6.73	6.85

GENERIC
MARKING DIAGRAM*

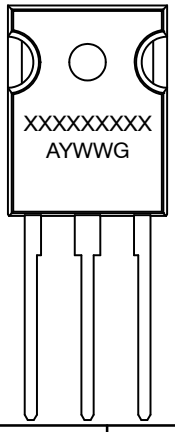

XXXX = Specific Device Code
A = Assembly Location
Y = Year
WW = Work Week
G = Pb−Free Package

*This information is generic. Please refer to device data sheet for actual part marking. Pb−Free indicator, “G” or microdot “▪”, may or may not be present. Some products may not follow the Generic Marking.

DOCUMENT NUMBER:	**98AON13853G**	Electronic versions are uncontrolled except when accessed directly from the Document Repository. Printed versions are uncontrolled except when stamped “CONTROLLED COPY” in red.
DESCRIPTION:	**TO−247−3LD**	**PAGE 1 OF 1**

onsemi and onsemi are trademarks of Semiconductor Components Industries, LLC dba **onsemi** or its subsidiaries in the United States and/or other countries. **onsemi** reserves the right to make changes without further notice to any products herein. **onsemi** makes no warranty, representation or guarantee regarding the suitability of its products for any particular purpose, nor does **onsemi** assume any liability arising out of the application or use of any product or circuit, and specifically disclaims any and all liability, including without limitation special, consequential or incidental damages. **onsemi** does not convey any license under its patent rights nor the rights of others.

onsemi, , and other names, marks, and brands are registered and/or common law trademarks of Semiconductor Components Industries, LLC dba "**onsemi**" or its affiliates and/or subsidiaries in the United States and/or other countries. **onsemi** owns the rights to a number of patents, trademarks, copyrights, trade secrets, and other intellectual property. A listing of **onsemi**'s product/patent coverage may be accessed at www.onsemi.com/site/pdf/Patent−Marking.pdf. **onsemi** reserves the right to make changes at any time to any products or information herein, without notice. The information herein is provided "as−is" and **onsemi** makes no warranty, representation or guarantee regarding the accuracy of the information, product features, availability, functionality, or suitability of its products for any particular purpose, nor does **onsemi** assume any liability arising out of the application or use of any product or circuit, and specifically disclaims any and all liability, including without limitation special, consequential or incidental damages. Buyer is responsible for its products and applications using **onsemi** products, including compliance with all laws, regulations and safety requirements or standards, regardless of any support or applications information provided by **onsemi**. "Typical" parameters which may be provided in **onsemi** data sheets and/or specifications can and do vary in different applications and actual performance may vary over time. All operating parameters, including "Typicals" must be validated for each customer application by customer's technical experts. **onsemi** does not convey any license under any of its intellectual property rights nor the rights of others. **onsemi** products are not designed, intended, or authorized for use as a critical component in life support systems or any FDA Class 3 medical devices or medical devices with a same or similar classification in a foreign jurisdiction or any devices intended for implantation in the human body. Should Buyer purchase or use **onsemi** products for any such unintended or unauthorized application, Buyer shall indemnify and hold **onsemi** and its officers, employees, subsidiaries, affiliates, and distributors harmless against all claims, costs, damages, and expenses, and reasonable attorney fees arising out of, directly or indirectly, any claim of personal injury or death associated with such unintended or unauthorized use, even if such claim alleges that **onsemi** was negligent regarding the design or manufacture of the part. **onsemi** is an Equal Opportunity/Affirmative Action Employer. This literature is subject to all applicable copyright laws and is not for resale in any manner.

ADDITIONAL INFORMATION

TECHNICAL PUBLICATIONS:
Technical Library: www.onsemi.com/design/resources/technical−documentation
onsemi Website: www.onsemi.com

ONLINE SUPPORT: www.onsemi.com/support
For additional information, please contact your local Sales Representative at www.onsemi.com/support/sales

Unikeyic Electronics

Global Electronic Components Distributor

Click to view pricing, inventory, delivery, and lifecycle information:

ON Semiconductor:

74LCX244WM MMVL2101T1G MVMBF0201NLT1G NCV7344AD10R2G BAS19LT3G ESD9X7.0ST5G NTS2101PT1G FAN3229TMX-F085 MMSZ5255BT1G RB751V40T1G 1N4749ATR CAT823TTDI-GT3 CAV25M01YE-GT3 MC7815CTG NL17SZ126DFT2G QT7810X SVC704-TL-E NCV20072DR2G NCV431BSNT1G FDMC86261P FDMS86202 FOD3120SDV LM2901MX MC14538BDTR2G NTS4101PT1G 1N5344BRLG 74ABT541CMTC MC34161DG MC74LVX244DWR2G SBAT54CWT1G-M02