GENERAL DESCRIPTION

The OPA348AIDBVR/OPA348AIDCKR is a CMOS operational amplifier that uses the proprietary auto-calibration technique to simultaneously provide very low offset voltage,near-zero drift over time and temperature.This miniature,high-precision,low quiescent current amplifiers offer high-impedance inputs that have a common-mode range 200mV beyond the rails,and rai-to-rail output that swings within 50mV of the rails, single or dual supplies as low as 2.1V(±1.35V)and up to 5.5V(±2.75V)can be used.
This device is optimized for low voltage,single supply operation.
The OPA348AIDBVR/OPA348AIDCKR offers excellent CMRR without the crossover associated with traditional complementary input stages . This design results in superior performance for driving analog-to-digital converters (ADC)without degradation of differential linearity.
The OPA348AIDBVR / OPA348AIDCKR is available in the 5-pin SOT-23-5 and SC70-5 packages , and specified for operation from -40℃ to 85℃.

FEATURES

- VDD range:2.1V to 5.5V
- Low Ofset Voltage:0.5mV (Typical)
- Low Drift:0.65μV/C(Typical)
- Low Noise
- Quiescent Current:28μA
- Rail to Rail Input/Output
- MicroSize Packages:SC70-5 and SOT23-5

Applications

- Transducers
- Temperature Measurement
- Electronic Scales
- Medical instrumentation
- Handheld Test Equipment

Reference News

PIN CONFIGURATION		Marking	
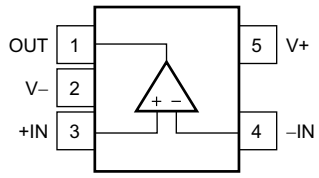	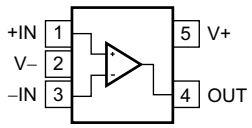		
SOT-23-5	SC70-5	SOT-23-5	SC70-5

PIN DESCRIPTION

NAME	PIN		I/O	DESCRIPTION
	DBV (SOT-23)	DCK (SC70)		
–IN	4	3	I	Negative (inverting) input
+IN	3	1	I	Positive (noninverting) input
NC	—	—	—	No internal connection (can be left floating)
OUT	1	4	O	Output
V–	2	2	—	Negative (lowest) power supply
V+	5	5	—	Positive (highest) power supply

REEL SPECIFICATION

P/N	PKG	QTY
OPA348AIDBVR	SOT-23-5	3000
OPA348AIDCKR	SC70-5	3000

SIMPLIFIED SCHEMATIC

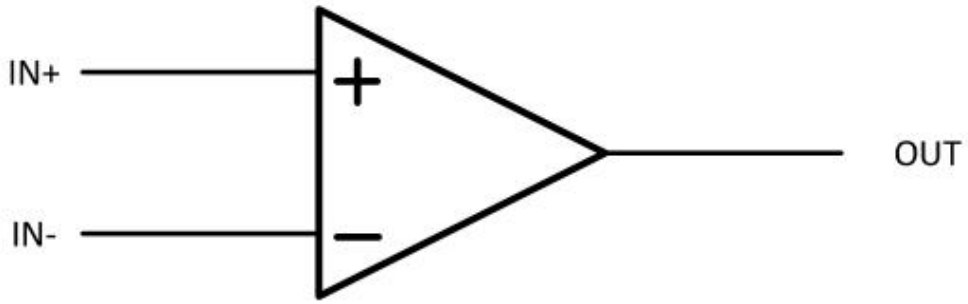

Figure 1.Simpliied Schematic

ABSOLUTE MAXIMUM RATINGS

Thermal Resistance 0 Jc.....130°C/W
Supply Voltage.....2.1 to 5.5V
Signal Input Terminals Voltage.....-0.1 to (V+) +0.1V
Operating Junction Temperature ..... 150℃
Operating Temperature Range ..... -40°C to 85°C
Storage Temperature ..... -65℃ to 150℃

ELECTRICAL CHARACTERISTICS

(At TA=25° C, RL=10k connected to Vs/2, and Vour=Vs/2, unless otherwise noted.)

PARAMETER	CONDITIONS	MIN	TYP	MAX	UNIT
Input Offset Voltage	Vs=±2.5V	-3	0.5	3	mV
nput Offset Voltage Drift	TA=-40°℃ to 85°℃		0.65		μV/℃
Power Supply Rejection Ratio	Vs =2.1V to 5.5V TA=-40℃ to 85℃	80	90		dB
Input Bias Curren	TA=25℃		2.0		pA
Input Offset Current			1.0		pA
Common-mode Voltage Range		(V-)-0.1		(V+)+0.1	V
Common-mode Rejection Ratio	V-)-0.1<Vcm<(V+)+0.1 TA=-40℃ to 85℃	80	95		dB
Open Loop Voltage Gain	(V-)+100mV<Vo<(V+)-100mV, RL=10k TA=-40°℃ to 85℃	80	100		dB
Gain-bandwidth product	CL=120pF		1.5		MHz
Slew Rate	G=+1		1.2		V/μs
Specified Voltage Range		1.8		5.5	V
Quiescent Current			28	40	μA
Operating Temperature Range		-40		85	℃
Storage Temperature Range		-65		150	℃

TYPICAL PERFORMANCE CHARACTERISTICS

(At T_A = 25°C, V_S=5V, C_L=20pF, unless otherwise noted.)

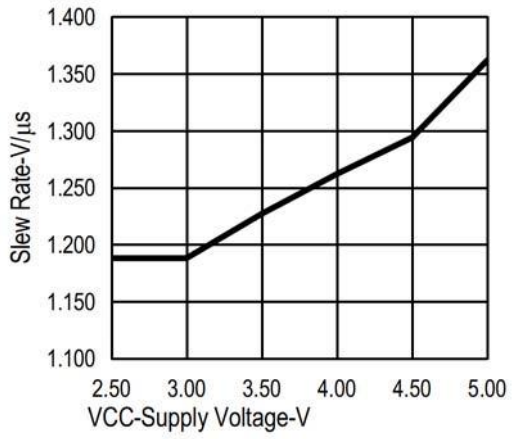

Figure 2. Slew Rate vs Supply Voltage

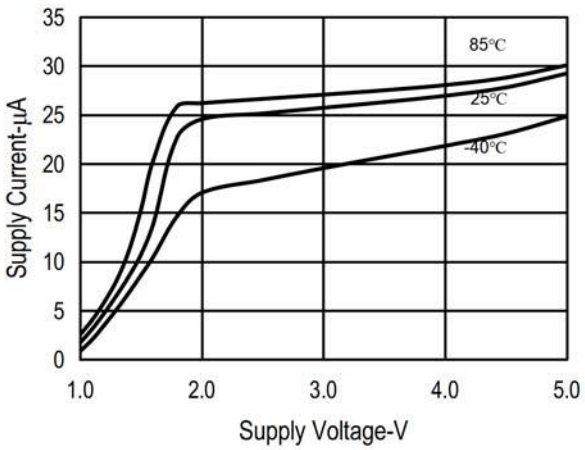

Figure 3. Supply Current vs Supply Voltage

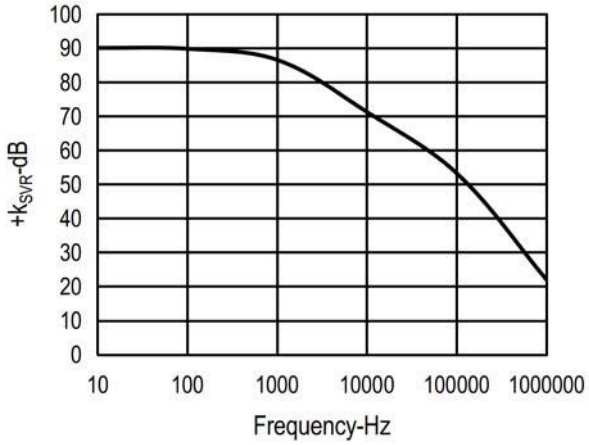

Figure 4. +kSVR vs Frequency

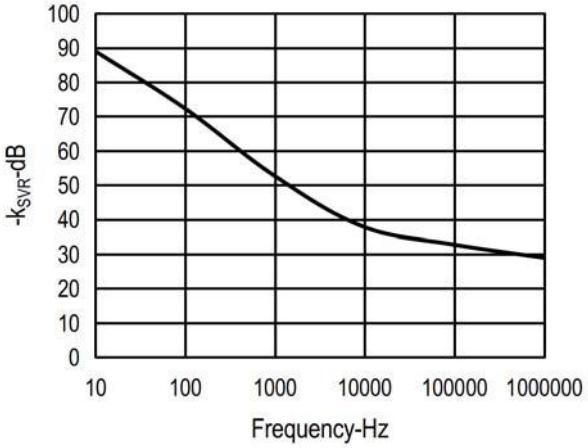

Figure 5. -kSVR vs Frequency

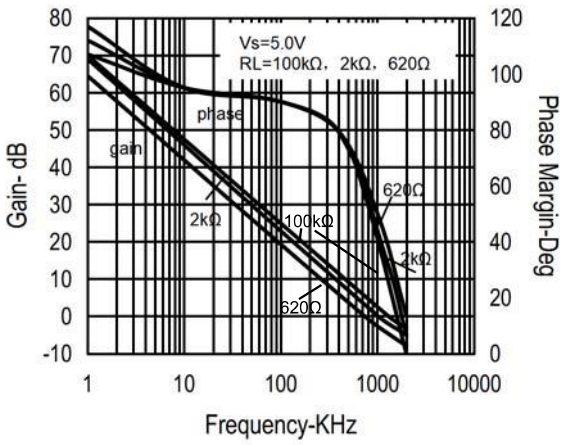

Figure 6. Frequency Response vs Resistive Load

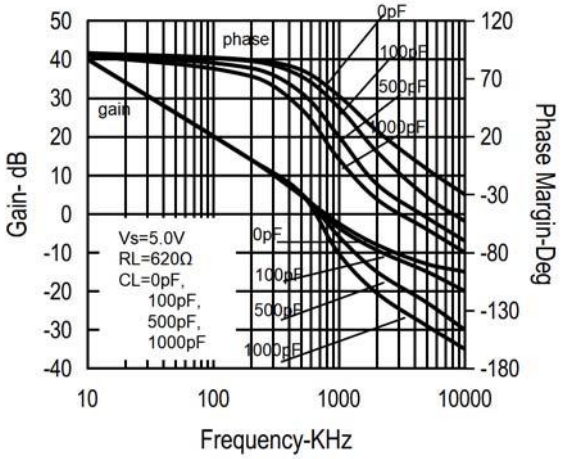

Figure 7. Frequency Response vs Capacitive Load

TYPICAL PERFORMANCE CHARACTERISTICS

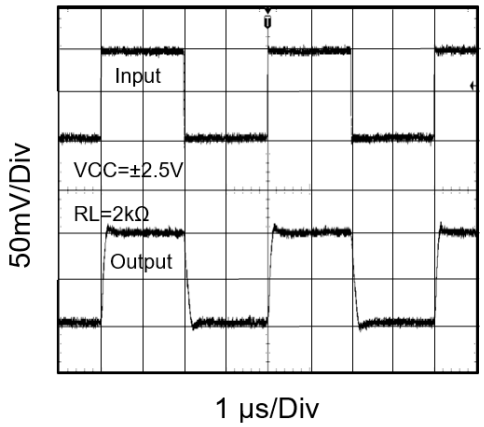

Figure 8. Noninverting Small-Signal Pulse Response

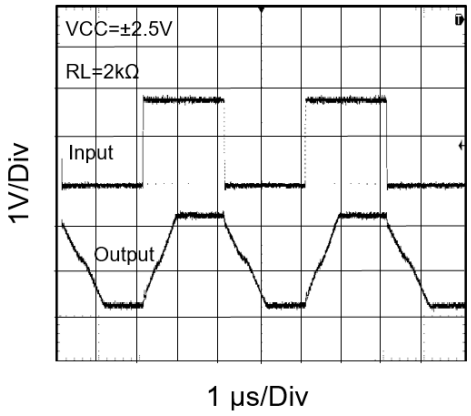

Figure 9. Noninverting Large-Signal Pulse Response

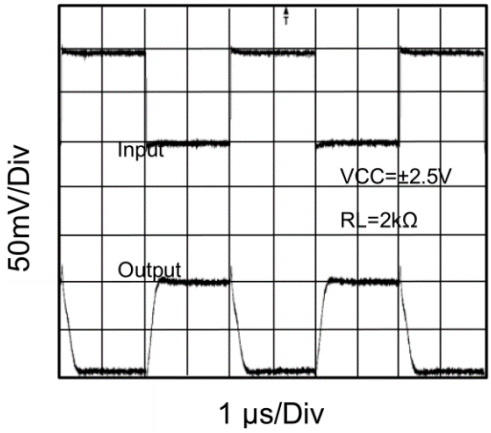

Figure 10. Inverting Small-Signal Pulse Response

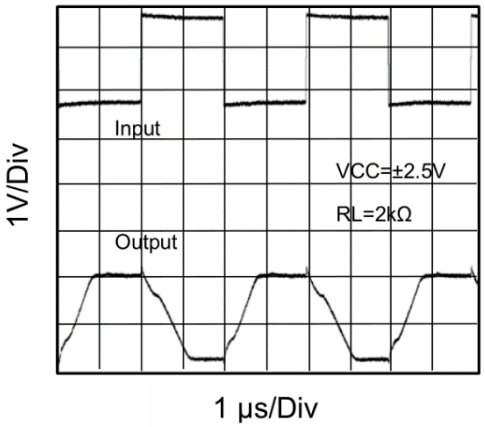

Figure 11. Inverting Large-Signal Pulse Response

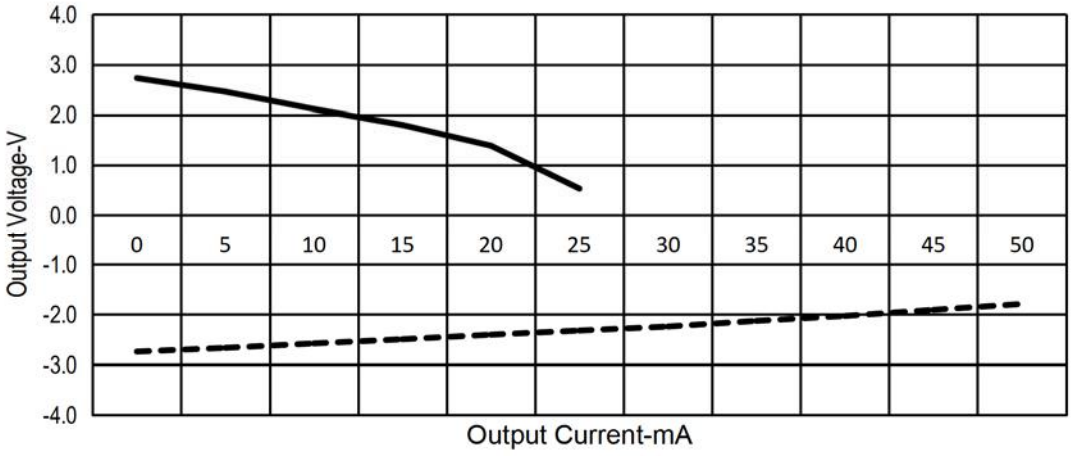

Figure 12. Output Voltage vs Output Current

FUNCTIONAL DESCRIPTION

Operating Voltage

The OPA348AIDBVR/OPA348AIDCKR devices are fully specified and ensured for operation from 2.1V to 5.5V . In addition , many specifications apply from -40℃ to 85℃. Parameters that vary significantly with operating voltages or temperature are shown in the Typical Characteristics graphs.

Unity-Gain Bandwidth

The unity-gain bandwidth is the frequency up to which an amplifier with a unity gain may be operated without greatly distorting the signal .The OPA348AIDBVR/OPA348AIDCKR device has a 1.5-MHz unity-gain bandwidth.

APPLICATIONS INFORMATION

The OPA348AIDBVR/OPA348AIDCKR is a unity-gain stable, precision operational amplifier with very low drift; offset voltage these devices are also free from output phase reversal. Applications with noisy or high-impedance power supplies require decoupling capacitors close to the device power-supply pins. In most cases, 0.1μF capacitors are adequate.

Typical Application

Figure 13 shows a simple circuit to convert a single-ended input into differential output.TheOPA348AIDBVR/OPA348AIDCKR could be used to build this circuit.The circuit is compo-sed of two amplifiers.One amplifier acts as a buffer and creates a voltage,VouT+.The second amplifier inverts the input and adds a reference voltage to generate Vour-.Both Vour+ and Vour-range from 0.5 to 2V.The diference,VDIFF ,is the difference between Vour+and VouT-.

Slew Rate

The slew rate is the rate at which an operational amplifier can change its output when there is a change on the input. The OPA348AIDBVR/OPA348AIDCKR devices have a 1.2 -V/μ s slew rate .The OPA348AIDBVR/OPA348AIDCKR is characterized toperform with this technique;the recommended resistor value is approximately 20k.

Device Functional Modes

The OPA348AIDBVR / OPA348AIDCKR device has a single functional mode. The device is powered on as long as the power supply voltage is between 2.1V (±1.35V) and 5.5V(±2.75V).

Detailed Design Procedure

Linearity over the input range is key for good dc accuracy.The common mode input range and the output swing limitations determine the linearity. In general , an amplifier with rail-to-rail input and output swing is required . Bandwidth is a key concern for this design .Because OPA348AIDBVR/OPA348AIDCKR has a bandwidth of 1MHz . this circuit will only be able to process signals with frequencies of less than 1 MHz.

Because the transfer function of Vour-is heavily relianton resistors (R1,R2,R3,and R4) use resistors with low tolerances to maximize performance and minimize error. This design used resistors with resistance values of 36 k with tolerances measured to be within 2%.If the noise of the system is a key parameter, the user can select smaller resistance values (6 k or lower)to keep the overall system noise low. This ensures that the noise from the resistors is lower than the amplifier noise.

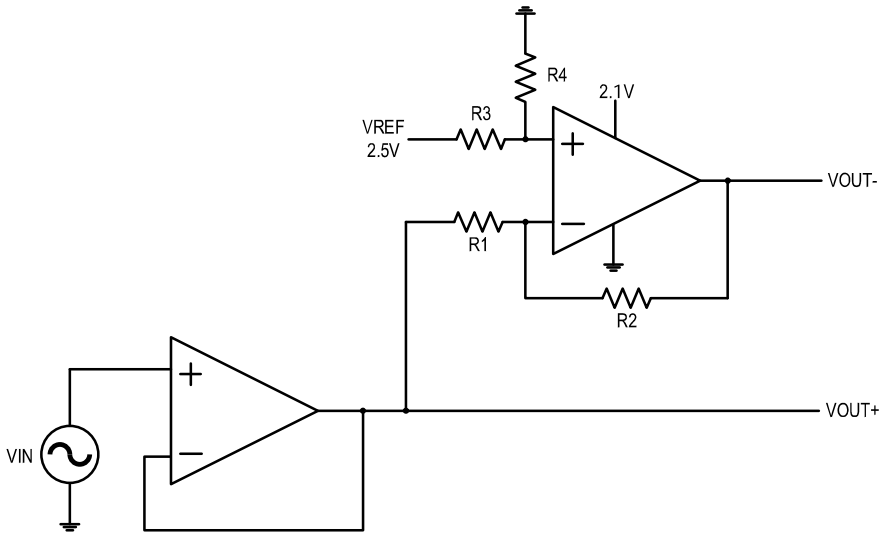

Figure 13. Schematic for Single-Ended Input to Differential Output Conversion

LAYOUT

Use good PCB layout practices for best operational performance of the device, including:

- Keep the length of input traces as short as possible.
- Run the input traces as far away from the supply lines as possible to reduce parasitic coupling.
- Place components close to device and to each other to reduce parasitic capacitance and parasitic errors.
- Use low-ESR, ceramic bypass capacitors to reduce the coupled noise by providing low impedance power sources local to the analog circuitry.
- Grounding for analog and digital portions of circuitry separately to suppresse the noise.

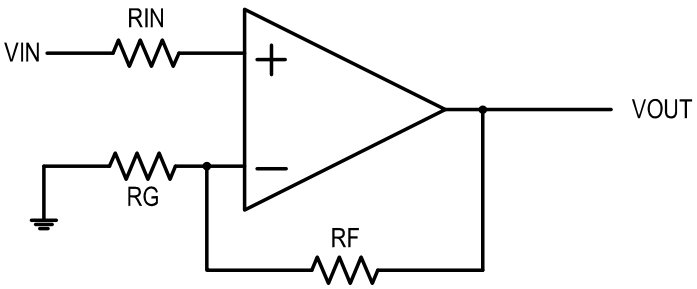

Package Outline Dimensions (All dimensions in mm(inch).)

SC-70-5

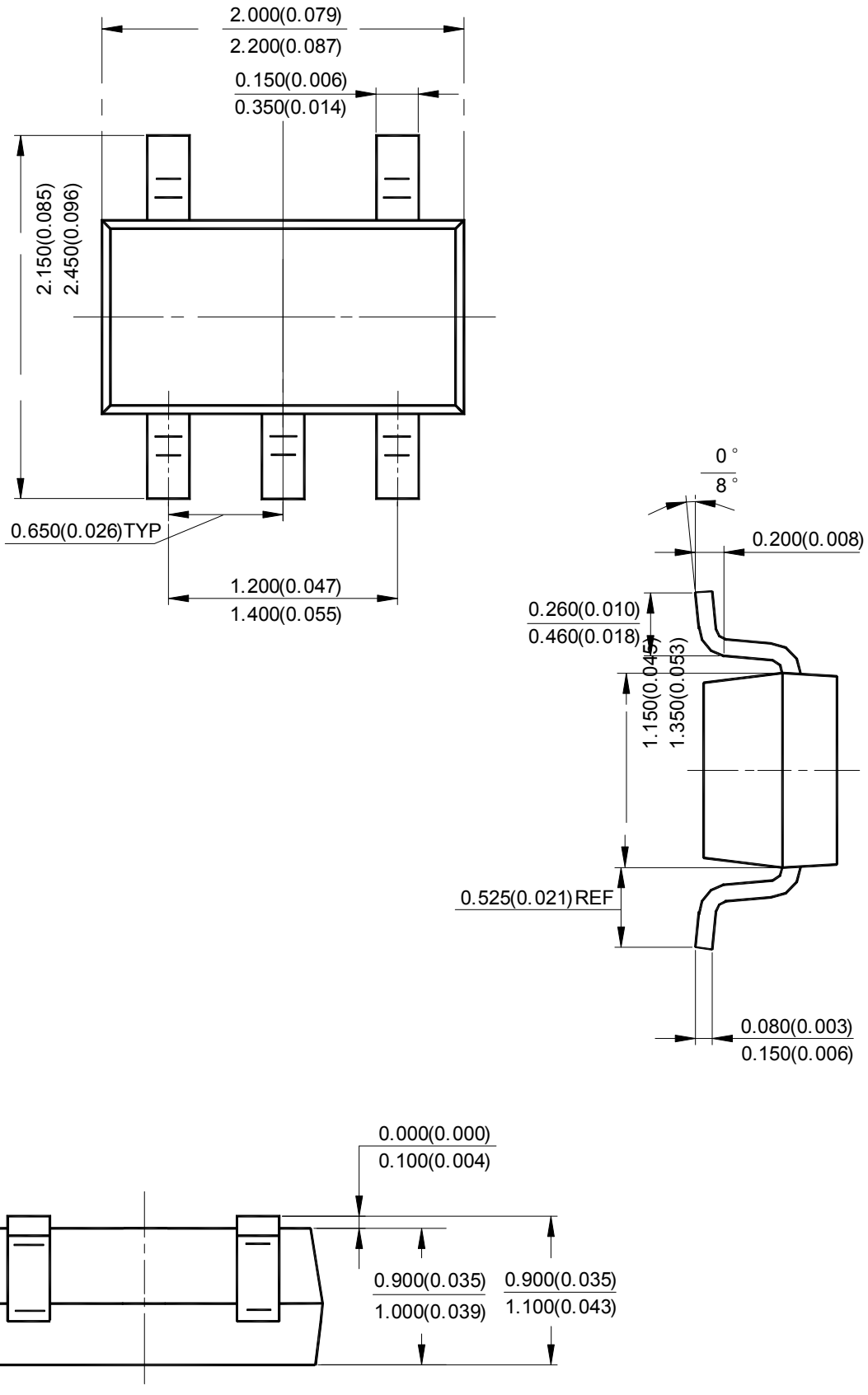

Package Outline Dimensions (Cont. All dimensions in mm(inch).)

SOT-23-5

