Technical Data
Data Sheet N2101, Rev. -

UG2D Ultra-Fast Recovery Rectifier Diodes

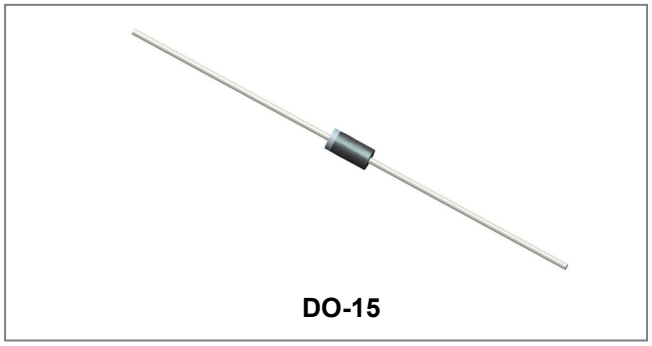

DO-15

Features

- Glass Passivated Die Construction
- High surge forward current capability
- Plastic Case Material has UL Flammability Classification Rating 94V-O
- High speed switching
- This is a Pb − Free Device
- All SMC parts are traceable to the wafer lot
- Additional testing can be offered upon request

Circuit Diagram



Mechanical Data

- Case: JEDEC DO-15 molded plastic body
- Terminals: Plated axial leads, solderable per MIL-STD-750, Method 2026
- Polarity: Color band denotes cathode end
- Mounting Position: Any
- Weight: 0.014 ounce, 0.40 grams

Maximum Ratings:

Characteristics	Symbol	Condition	Max.	Units
Peak Repetitive Reverse Voltage Working Peak Reverse Voltage DC Blocking Voltage	V_{RRM} V_{RWM} V_R	-	200	V
Average Rectified Forward Current	$I_{F\ (AV)}$	50% duty cycle @T_C=150°C, rectangular wave form	2	A
Peak One Cycle Non-Repetitive Surge Current	I_{FSM}	8.3ms, Half Sine pulse	80	A

Electrical Characteristics:

Characteristics	Symbol	Condition	Max.	Units
Forward Voltage Drop*	V_{F1}	@ 2A, Pulse, T_J = 25°C	0.95	V
Reverse Current*	I_{R1}	@V_R = rated V_R T_J = 25°C	5	μA
	I_{R2}	@V_R = rated V_R T_J = 150°C	300	μA
Reverse Recovery Time	t_{rr}	I_F=500mA, I_R=1A,and I_{rm}=250mA	15	ns

* Pulse width < 300 μs, duty cycle < 2%

Technical Data
Data Sheet N2101, Rev. -

RoHS

Thermal-Mechanical Specifications:

Characteristics	Symbol	Condition	Specification	Units
Junction Temperature	T_J	-	-55 to +175	°C
Storage Temperature	T_{stg}	-	-55 to +150	°C
Typical Thermal Resistance Junction to Lead	$R_{\theta JL}$	DC operation	55	°C/W
Approximate Weight	wt	-	0.09	g

Ratings and Characteristics Curves

FIG1: Forward CurrentDerating Curve

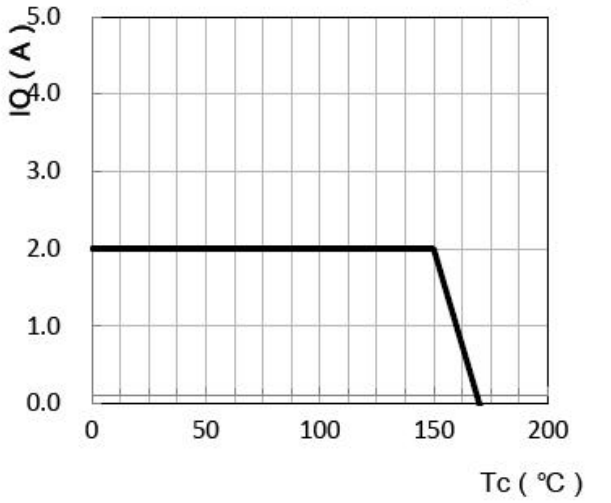

FIG2:Surge Forward Current Capadility

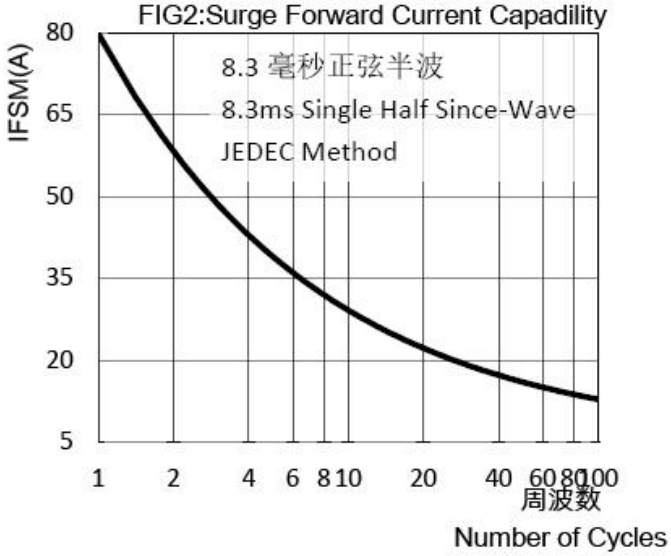

FIG3:Instantaneous Forward Voltage

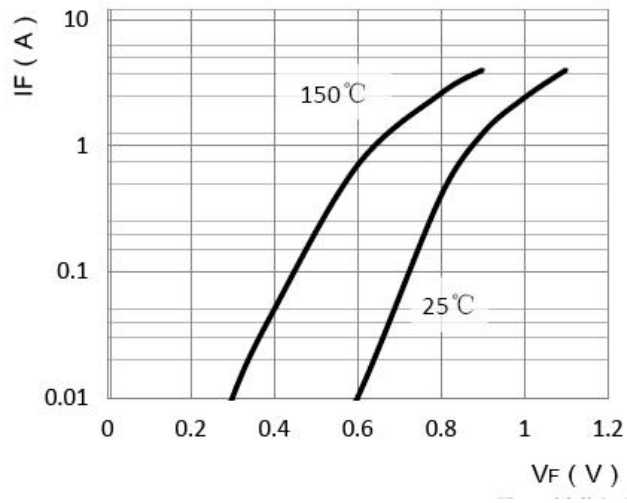

FIG4:Typical Reverse Characteristics

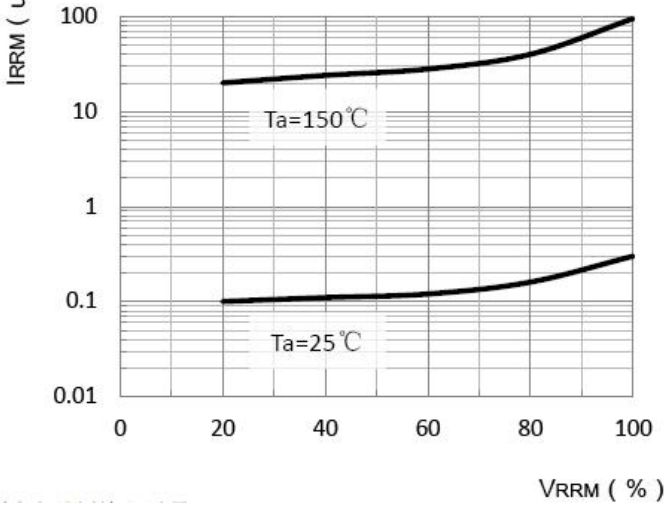

Technical Data
Data Sheet N2101, Rev. -

Diagram of circuit and Testing wave form of reverse recovery time

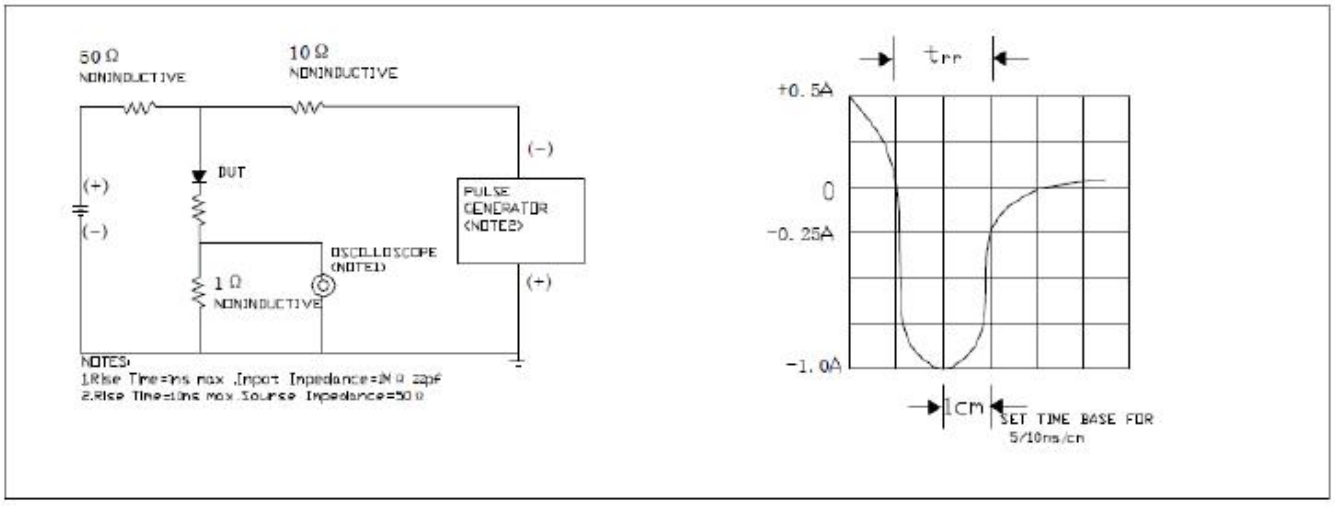

Mechanical Dimensions DO-15

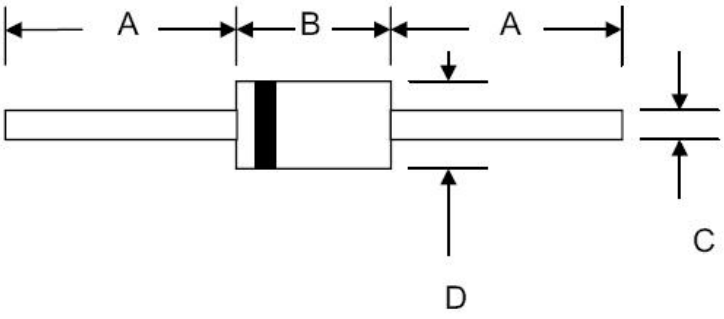

SYMBOL	Millimeters		Inches	
	Min.	Max.	Min.	Max.
A	25.4	-	1.000	-
B	5.5	7.62	0.217	0.300
C	0.7	0.9	0.028	0.034
D	2.6	3.6	0.104	0.140

Ordering Information

Device	Package	Shipping
UG2D	DO-15 (Pb-Free)	3000pcs /tape

For information on tape and reel specifications, including part orientation and tape sizes, please refer to our tape and reel packaging specification.

Marking Diagram



Where XXXXX is YYWWL

UG2D = Part Name
SSG = SSG
YY = Year
WW = Week
L = Lot Number

Cautions: Molding resin
Epoxy resin UL:94V-0

Technical Data
Data Sheet N2101, Rev. -

RoHS

Carrier Tape Specification DO-15

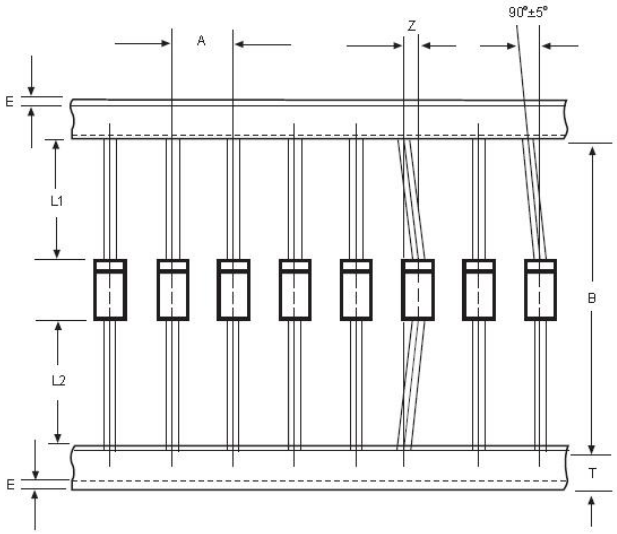

SYMBOL	Millimeters	
	Min.	Max.
A	4.50	5.50
B	50.9	53.9
Z	-	1.20
T	5.60	6.40
E	-	0.80
IL1-L2I	-	1.0

DISCLAIMER:
1- The information given herein, including the specifications and dimensions, is subject to change without prior notice to improve product characteristics. Before ordering, purchasers are advised to contact the SMC Diode Solutions sales department for the latest version of the datasheet(s).
2- In cases where extremely high reliability is required (such as use in nuclear power control, aerospace and aviation, traffic equipment, medical equipment , and safety equipment) , safety should be ensured by using semiconductor devices that feature assured safety or by means of users' fail-safe precautions or other arrangement .
3- In no event shall SMC Diode Solutions be liable for any damages that may result from an accident or any other cause during operation of the user's units according to the datasheet(s). SMC Diode Solution assumes no responsibility for any intellectual property claims or any other problems that may result from applications of information, products or circuits described in the datasheets.
4- In no event shall SMC Diode Solutions be liable for any failure in a semiconductor device or any secondary damage resulting from use at a value exceeding the absolute maximum rating.
5- No license is granted by the datasheet(s) under any patents or other rights of any third party or SMC Diode Solutions.
6- The datasheet(s) may not be reproduced or duplicated, in any form, in whole or part, without the expressed written permission of SMC Diode Solutions.
7- The products (technologies) described in the datasheet(s) are not to be provided to any party whose purpose in their application will hinder maintenance of international peace and safety nor are they to be applied to that purpose by their direct purchasers or any third party. When exporting these products (technologies), the necessary procedures are to be taken in accordance with related laws and regulations..

Unikeyic Electronics

Global Electronic Components Distributor

Click to view pricing, inventory, delivery, and lifecycle information:

SMC:

MBR60150CT S8ULCC36-2 STD20100CE UG2KB100 MBR30100 S2M0120120K 151CMQ045
MBR40200WT SF14G 183NQ100R-1 3.0SMCJ22CA BZT52B5V1S MBRF2060CT SDURD1030
SST24A-800BW 5.0SMCJ60CA CESD24VD5 SMBJ33CATR STB60100C 5.0SMCJ33A 83CNQ080 MB6F
MBR4080CT MBRB10200CT MBRF10100CT MMSZ5261B MBR1550S SCT825B SDUR1040 SDURB860A