PULSE-WIDTH-MODULATION BATTERY CHARGER

GENERAL DESCRIPTION

The CM6628 is a constant current, constant voltage power supply controller, which incorporate a voltage mode, a current mode circuit, and pulse width modulation (PWM) switching regulator control circuit.

An external sense resistor will set the charge current with ±8% accuracy. An internal resistor divider and precision reference set the final float voltage to 5V with ± 2% accuracy. With a 100 KHz switching frequency, the CM6628 provides a simple solution to the EMI problem. High efficiency up to 90% will minish application component heat.

The CM6628 also has over-voltage protect, over-thermal protect, and short circuit protect function. At the beginning of the charge, the over-current circuit will limit the charge current not too high.

The CM6628 is available in a 6-pin SOT 23-6 package.

FEATURES

- Wide Input Supply Range: 10V to 42V
- High Efficiency Current Mode PWM Controller with 100KHz Switching Frequency
- ±2% Charge Voltage Accuracy
- Constant Switching Frequency for Minimum Noise
- ±8% Charge Current Accuracy
- Cable compensation function
- Automatic Battery Recharge
- Automatic Shutdown When Input Supply is Removed
- Available in a 6-pin SOT23-6 package

APPLICATIONS

- SMPS
- Charger
- Portable Computers
- Handheld Instruments

TYPICAL APPLICATION

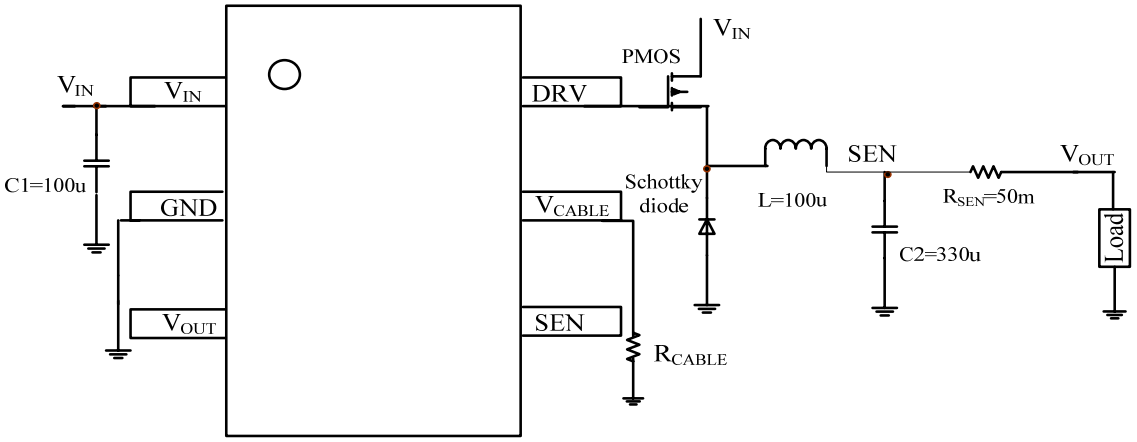

Figure 1.FOR 5V/1A

PIN CONFIGURATIONS

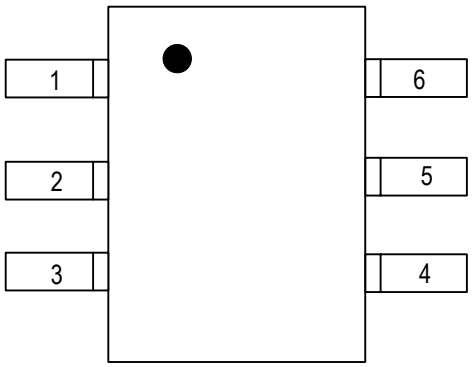

Figure2 Pin configuration

PIN DEFINITION

PIN	NAME	DESCRIPTION
1	V_{IN}	Power Supply Input.
2	GND	The ground of IC.
3	V_{OUT}	Output power supply. Connect to the external charge equipment. Note1
4	SEN	Output Voltage feedback.
5	V_{CABLE}	Connect an equal resistor to set the compensation voltage and improve the output power which the cable wasted. If float this pin, cable compensation function will not work.
6	DRV	Gate Drive Output. Driver output for the external P-Channel MOSFET. The voltage at this pin is internally clamped to 8V below V_{IN}.

Note1: V_{OUT} can be programmed to compensate the wasting voltage of cable.

ABSOLUTE MAXIMUM RATINGS

PARAMETER	SYMBOL	MIN	MAX	UNITS
Input Supply Voltage	V_{IN}	10	42	V
Operating Temperature Range	T_{OPR}	-40	85	°C
Storage Temperature Range	T_{STG}	-20	125	°C
Junction Temperature	θJA	---	125	°C
Lead Temperature (Soldering, 10s)	T_{LTG}	---	260	°C

ELECTRICAL CHARACTERISTICS

(Circuit of Figure 1,T_A = 25°C, V_{IN}=12V, V_{OUT}=5V, unless otherwise noted.)

SYMBOL	PARAMETER	CONDITIONS	MIN	TYP	MAX	UNITS
V_{IN}	Power Supply Input Voltage	-	10	-	42	V
$\Delta V_{OUT}/V_{OUT}$	Output Voltage Accuracy	-	-	±2	±5	%
I_{CHG}	Constant Current Mode Charge Current	R_{SEN}=25mΩ	-	2000	-	mA
		R_{SEN}=50mΩ	-	1000	-	mA
$\Delta I_{CHG}/I_{CHG}$	Constant Current Accuracy	-	-	±8	±12	%
I_Q	Quiescent current	No load	-	-	220	μA
V_{RIPPLE}	Output Ripple Voltage	I_{LOAD}=1A	50	-	80	mV
T_{ON}	The time of output voltage up to V_{OUT}	V_{OUT}=5V	6	10	12	mS
F	Frequency	I_{LOAD}=0.5A	80	100	120	KHz
V_{SHORT}	Short Circuit threshold	-	1.0	1.5	1.8	V
	Recover Short Circuit threshold	-	1.5	1.8	2.0	V
I_{SHORT}	Short Circuit Current	When short circuit happend	1.5	2	3	mA
V_{CABLE}	Cable compensation voltage	$V_{CABLE} = \frac{1500K}{R_{CABLE}} \times I_{LOAD} \times R_{SEN}$	-	-	500	mV
T_{PRO}	Over temperature threshold	-	110	120	130	℃
T_{REL}	Release threshold from over temperature	-	80	90	100	℃

TYPICAL OPERATING CHARACTERISTICS

(Circuit of Figure 1,T_A = 25°C, V_{IN}=12V, V_{OUT}=5V, unless otherwise noted.)

Efficiency vs Load Current

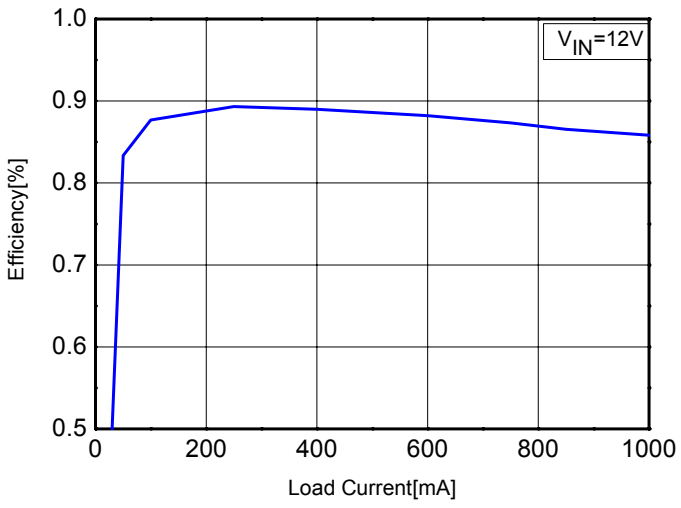

Efficiency vs Load Current

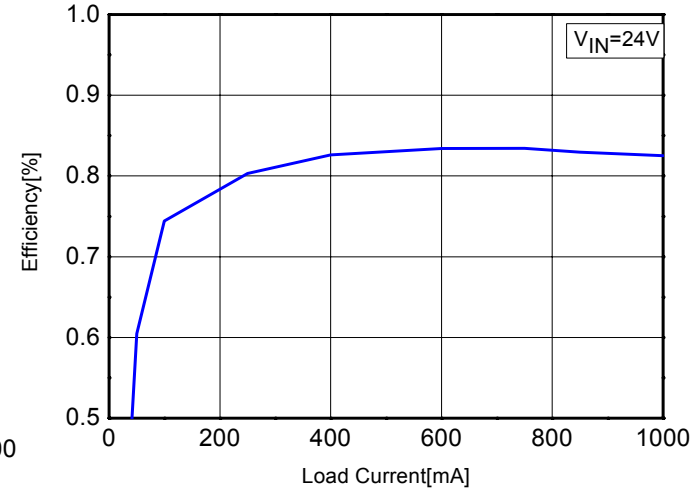

Output Voltage vs Input Voltage

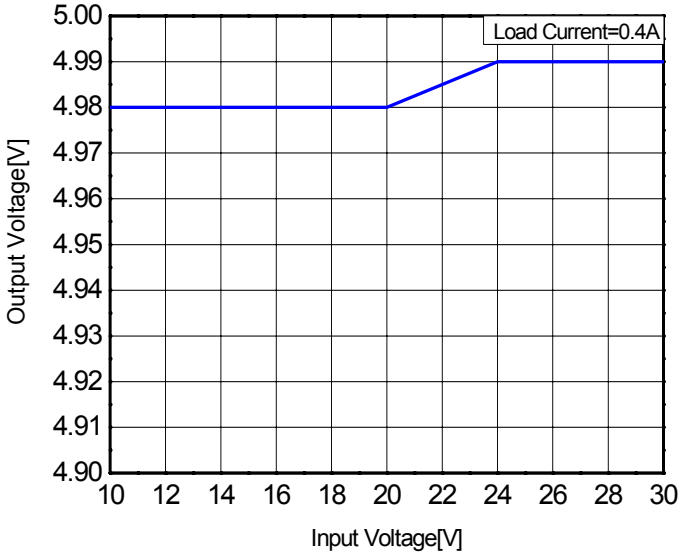

Output Voltage vs Input Voltage

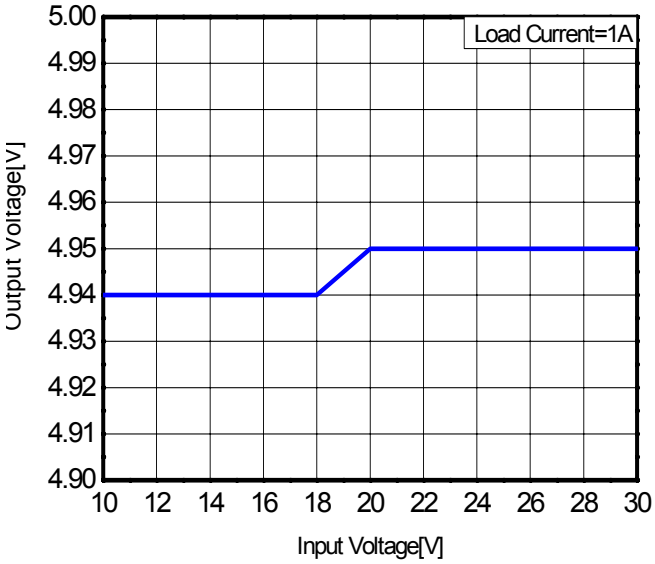

Output Ripple Voltage vs Input Voltage

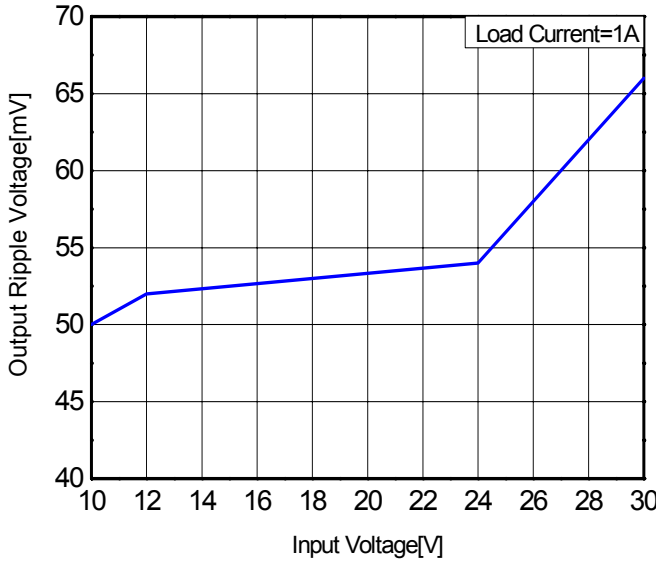

Output Ripple Voltage vs Input Voltage

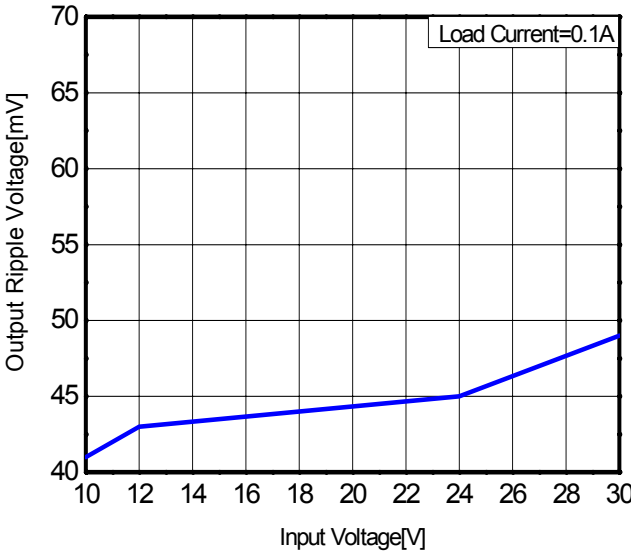

Output Ripple Voltage vs Input Voltage

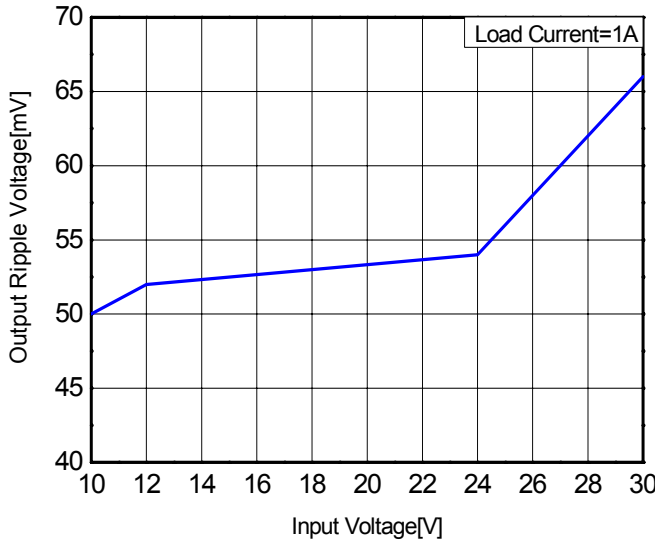

Output Ripple Voltage vs Input Voltage

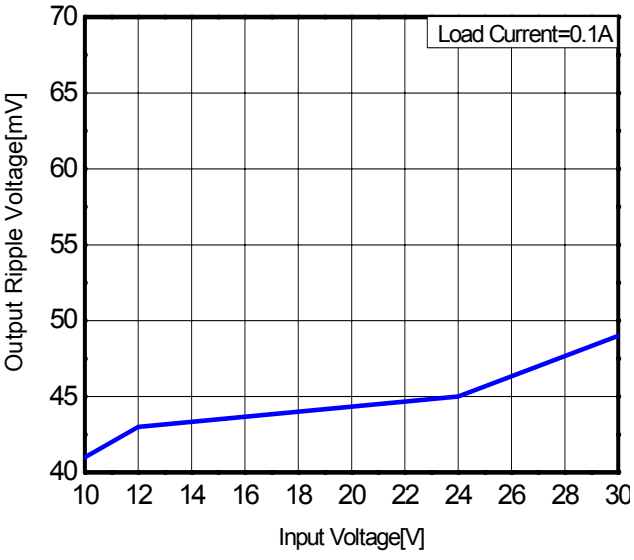

Cable compensation vs Load Current

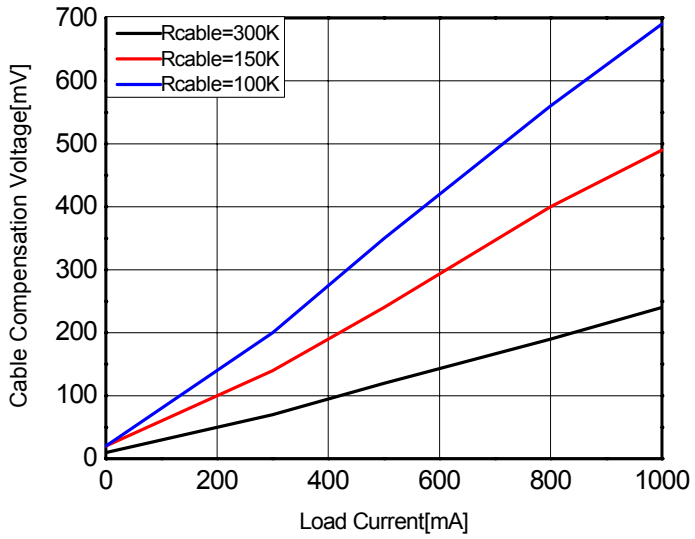

Quiescent current vs Input Voltage

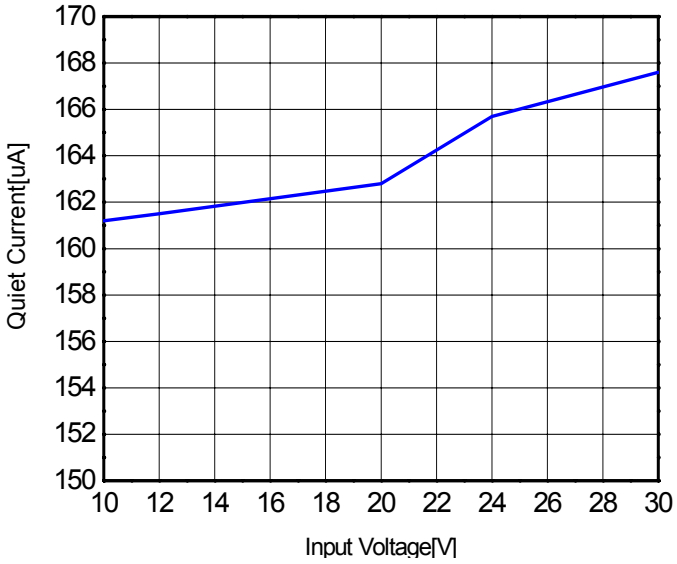

FUNCTION DIAGRAM

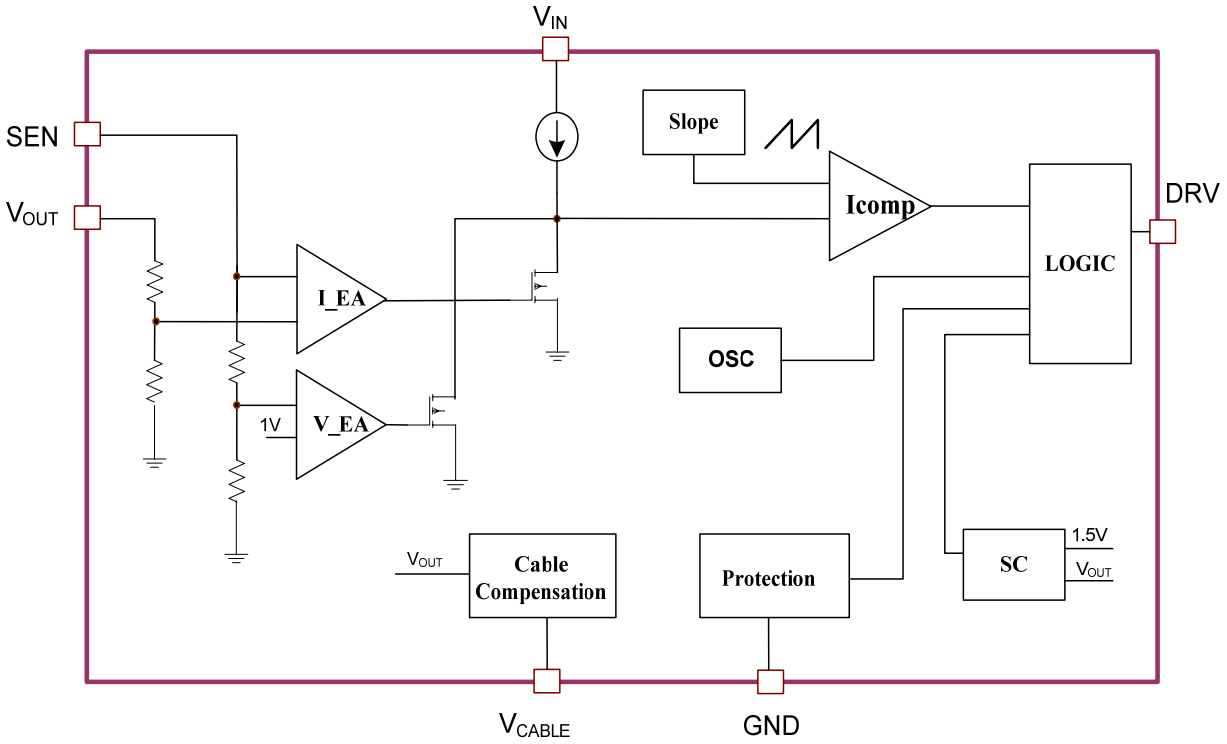

OPERATION

Introduction

The CM6628 is designed to be a power supply control; it incorporates a constant current circuit and a constant voltage circuit. The charge current is set by an external sense resistor (RSEN) across the SEN and V_{OUT} pins. The final output voltage is internally set to 5V, the internal amplifier and resistor divider provide regulation with ±2% accuracy.

Start-Up

When system detect the input power connect to IC, the internal start-up circuit will send a signal to and enable the IC. If the input voltage is below 4V, the IC should not start up.

Constant Current and Voltage circuit

During normal operation, the constant current charge loop start-up at first, but it will be replaced by the constant voltage loop, when the output voltage is higher than design (5V). In the constant current loop, the average current of inductor is set to be followed the external sense resistor. This constant current function controlled by error amplifier I-EA, and the amplifier make sure the current ±5% accuracy. In the voltage loop, system regulate SEN voltage by switching at a constant frequency transferring the power to the load in each cycle, uses a slope circuit, voltage mode PWM controller.

A simplified function diagram of charge current and charge voltage is shown in Figure 4:

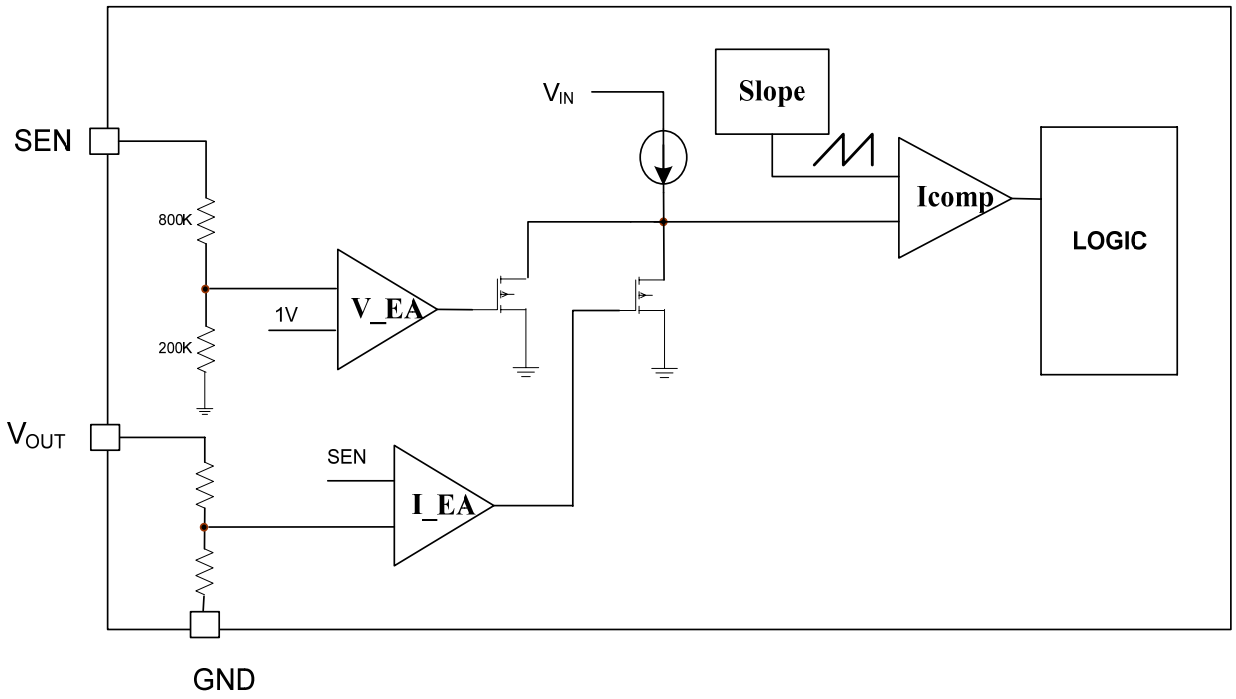

Cable Compensation

The cable of car charger will lose some power, reducing the output voltage. Add voltage compensation function will increase the output voltage and make the output of cable is remained to be the design value. An external resistor will be connected to the VCABLE pin to matching the immanent resistor of cable. In the cable compensation circuit, the voltage of the VCABLE pin will be raised as the load current increase; the reference voltage of voltage loop will be raised to an appropriate value, and finished the compensation function.

If there's no load, no compensation resistor or output current is zero, the output voltage don't rise. If not use this function, let the VCABLE pin hang in the air. The selection of external compensation resistor is based on the equivalent resistance of cable. The relation of compensation voltage and resistor is as the formula 1.

$$V_{CABLE} = \frac{1500K}{R_{CABLE}} \times I_{LOAD} \times R_{SEN} \qquad \textbf{Formula 1}$$

Over Voltage protection

When the output voltage of CM6628 is 10% higher then the design voltage, the PMOS will be turned off.

Thermal Shutdown

An internal thermal loop can monitors the die temperature. If the die temperature attempts to rise above a preset value of approximately 120℃, it can turn off the charge. This feature protects the CM6628 from excessive temperature and allows the user to push the limits of the power handling capability of a given circuit board without risk of damaging the CM6628.

Short Circuit protection

At the beginning of enable the IC, system will charge the load about 100ms. If the short circuit protection module detect the output voltage is fall down 1.5V, it will send a single to logic circuit for shut down the IC. When short circuit happened, a current about 2 mA will charge the load. If the short circuit state is resumed, the charge current will raise output above 1.5V, and the module will detect it and free from protecting state.

Over Current Protection

CM6628 has an internal over-current protection circuit that limits the inrush current during start-up. At the beginning of the start-up, the over-current protection circuit will detect the current, if it's too high to exceed the safe value, the PMOS will be turn-off. But when output is rise to the design voltage, the protect function will not active anymore. The I-EA will replace the function to limiting the current.

APPLICATION INFORMATION

The basic application circuit of CM6628 is shown in Figure 1. External components selection is depend on load requirement, and begin with the selection of inductor followed by capacitor.

Inductor Selection

The inductor is chosen based on the desired ripple current. Large value inductors result in lower ripple current and small value inductors result in higher ripple current. Higher V_{IN} or V_{OUT} also increases the ripple current. Always consider the losses associated with the DCR and its effect on the total converter efficiency when selecting an inductor. For most designs, the CM6628 operates with inductors of 100uH, the inductor is selected to limit the ripple current to some predetermined value, typically 20～40% of the full load current at the maximum input voltage. The formula of inductance value is as below:

$$\Delta I_L = \mathrm{K} \times \frac{1 - V_{OUT}/V_{IN}}{L \times f} \qquad (\mathrm{K}= 0.2\sim0.4)$$ **Formula 2**

$$L = \frac{V_{OUT}}{f \times \Delta I_L}\left(1 - \frac{V_{OUT}}{V_{IN}}\right)$$ **Formula 3**

The DC current rating of the inductor should be at least equal to the maximum load current plus half the ripple current to prevent core saturation. For example, $\triangle I_L$=1000mA×40%=400mA, thus, a 1400mA rated inductor should be enough for most application (1000mA+400mA). For better efficiency, choose a low DCR inductor.

Input Capacitor Selection

The input capacitor reduces the surge current drawn from the input and switching noise from the device. The input capacitor impedance at the switching frequency shall be less than input source impedance to prevent high frequency switching current passing to the input. A low ESR input capacitor sized for maximum RMS current must be used. A 100uF ceramic capacitor for most application is sufficient.

Output Capacitor Selection

The output capacitor is required to keep the output voltage ripple small and to ensure regulation loop stability. The output capacitor must have low impedance at the switching frequency. Ceramic capacitors with X5R or X7R dielectrics are recommended due to their low ESR and high ripple current. The output ripple V_{OUT} is determined by the formula below:

$$\Delta V_{OUT} = \Delta I_L \left(ESR + \frac{1}{8\,fC_{OUT}}\right)$$ **Formula 4**

Load Current limit Programming

The constant current I_{CHG} is programmed with a sense resistor connected between the inductor and output. The voltage drop of the resistor (RSEN) is internally regulated to 50mV, which sets the current flowing through R_{SEN}.
For the best accuracy, a 2% or better resistor is recommended. Table 1 shows several typical 1% R_{SEN} values.

I_{CHG}(mA)	R_{SEN}(mΩ)
2000	25
1000	50

For other constant current values, use the following equation to choose R_{SEN}:

$$R_{SEN} = \frac{0.05}{I_{CHG}}$$ **Formula 5**

The application circuit of limiting 2A load current as follow.

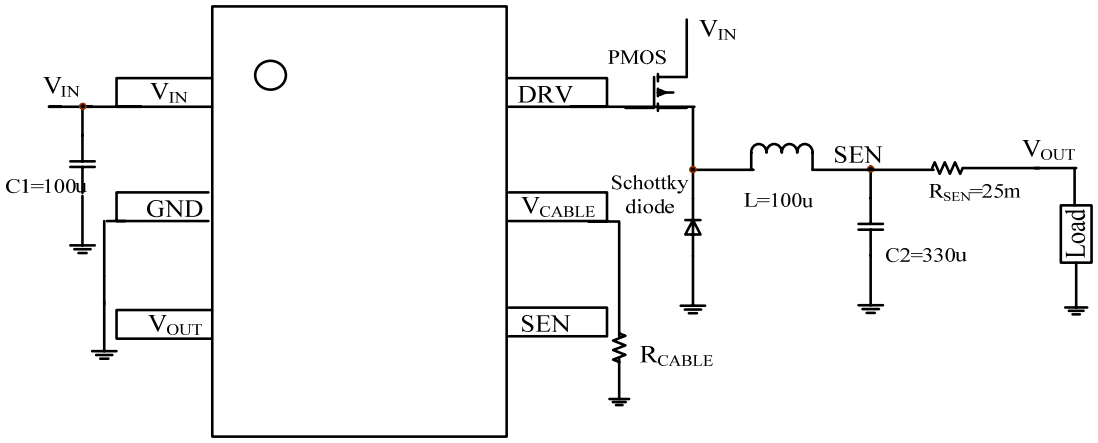

PACKAGE DESCRIPTION

6-Lead Plastic SOT-23

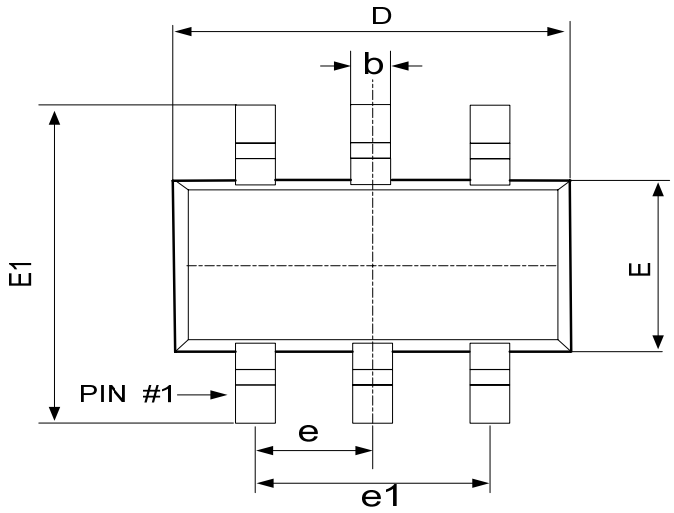

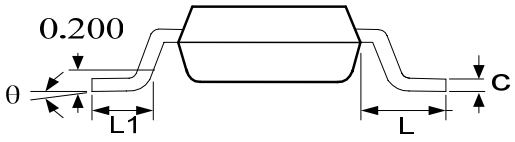

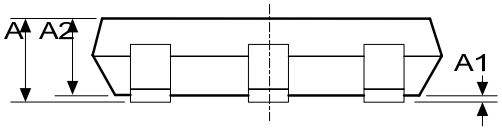

Symbol	Dimensions In Millimetres		Dimensions In Inches	
	Min	Max	Min	Max
A	1.050	1.250	0.041	0.049
A1	0.000	0.100	0.000	0.004
A2	1.050	1.150	0.041	0.045
b	0.300	0.500	0.012	0.020
c	0.100	0.200	0.004	0.008
D	2.820	3.020	0.111	0.119
E	1.500	1.700	0.059	0.067
E1	2.650	2.950	0.104	0.116
e	0.950(BSC)		0.037(BSC)	
e1	1.800	2.000	0.071	0.079
L	0.300	0.600	0.012	0.024
θ	0°	8°	0°	8°