TAOGLAS



Datasheet

Cat6A Premium Ethernet Cable

Part No:
TEC11WHT1 Series

Description:

Shielded Cat6A SF/FTP 26AWG Patch Cable

Shielded 8P8C Plug to Plug

Features:

SF/FTP (Triple shielded)

50µ" Gold plating

PoE++

Drain wire

Snagless with protection latch

100% Pass Patch Cord Test

1.	Introduction	3
2.	Specifications	4
3.	Mechanical	5
4.	Part numbers	9
5.	Packaging	10
	Changelog	12

Taoglas makes no warranties based on the accuracy or completeness of the contents of this document and reserves the right to make changes to specifications and product descriptions at any time without notice. Taoglas reserves all rights to this document and the information contained herein. Reproduction, use or disclosure to third parties without express permission is strictly prohibited.

1. Introduction

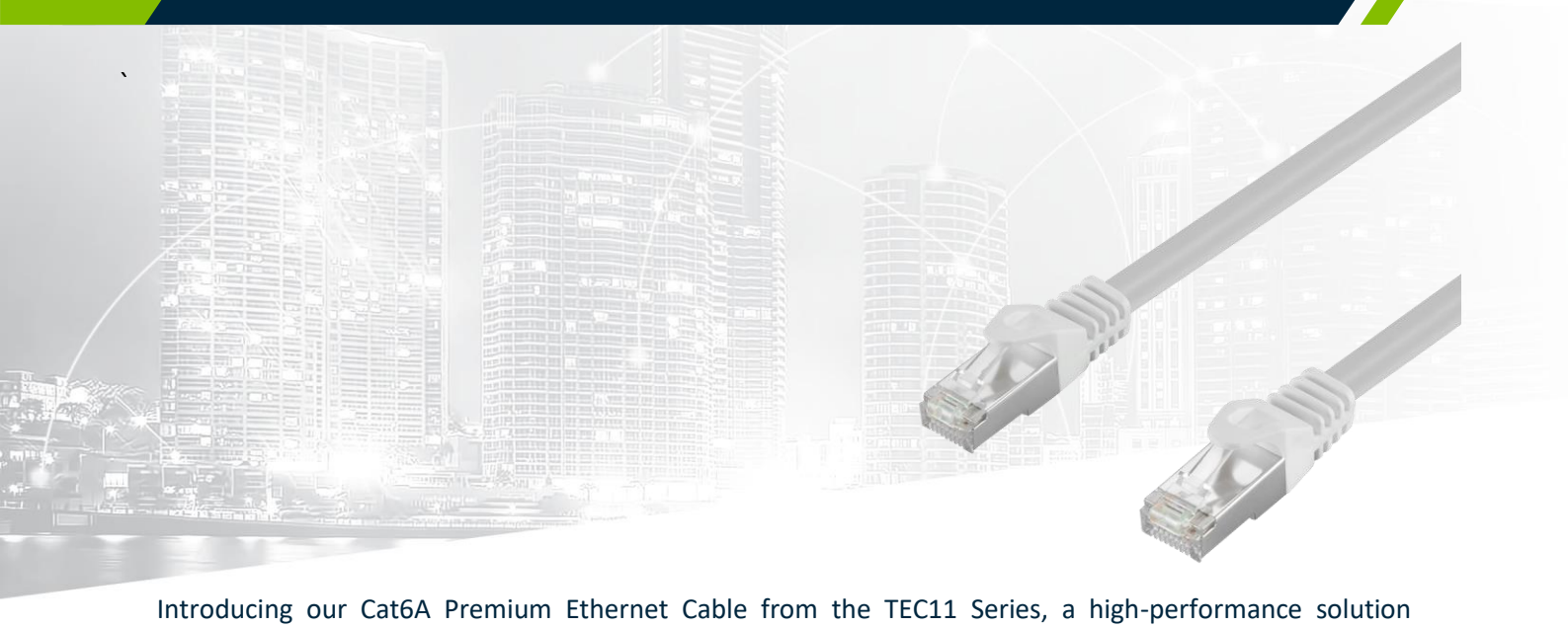

Introducing our Cat6A Premium Ethernet Cable from the TEC11 Series, a high-performance solution designed to meet your demanding connectivity requirements. This shielded Cat6A SF/FTP 26AWG Patch Cable ensures optimal signal integrity, and its 8P8C Plug to Plug configuration facilitates seamless connections. With a 50µ" gold-plated three-piece plug featuring snagless and a protection latch, this cable guarantees secure and reliable performance. Rigorously tested and achieving a flawless 100% Pass in the Patch Cord Test, our Cat6A cable is your trusted choice for robust and efficient networking. Upgrade your network infrastructure with the superior quality and advanced features of the TEC11 Series.

Typical Applications Include:

- Home and Office Networking
- Manufacturing and Infrastructure
- Internet Service Providers
- Gaming
- Data Centres

Taoglas Magnetics offer an extensive product line of Ethernet cables designed for commercial and industrial grade applications, supporting 10/100 Base-T up to 10G Base-T. Designed to deliver top-tier performance Taoglas Ethernet cables provide reliable performance and maintain signal integrity that meets IEEE 802.3 standards, and they are ETL certified. The Power over Ethernet options are also available including PoE, PoE+ and PoE++.

The Taoglas Ethernet cables are designed with a high-quality Shielded Foiled Twisted Pair configuration to ensure data transmission remains clear and free from interference, even in environments with high EMI. The cables are equipped with snaggles and a robust protection latch that firmly secures the connection. Taoglas products are fully compliant with the REACH and RoHS directive.

For customized products or support with integration, contact your regional Taoglas customer support team for further information.

2. Specifications

Data Rate	
Transmission characteristics	Cat6A up to 500MHz
Data rate	10 Gbps
	5 Gbps
	2.5 Gbps
	1 Gbps
	100 Mbps

Electrical Performance @25°C	
Electrical Test	100% Open Short, Miss Wire Test
Insulation Resistance	DC 300V 10MΩ min
Contactor Resistance	2Ω max
PoE	PoE++

FLUKE Test	
TIA CAT6A CHANNEL (+POE) TEST PASS Loop Resistance	<25Ω
Unbalance Resistance	<0.2Ω
Pair to Pair resistance	<0.2Ω
3FT,6FT,10FT, 15FT CAT6A PATCH CORD TEST	PASS 100%

Material Specifications	
Shield	Plated Nickel
Pins	50µ" Gold plating
Plug	Polycarbonate, 94V-2, NO Poison

Environmental Specifications	
Operating Temperature	-20°C TO +60°C

Compliance
ETL recognized - FILE NO. 5027866
IEEE 802.3af/802.3at/802.3bt PoE Standard (PoE+ AND PoE++) Patch Cable Use
RoHS and REACH Compliant

Storage requirements	
Humidity	MSL - 1
Storage Temperature	-40°C TO +85°C

3. Mechanical Drawings

3.1 Cable

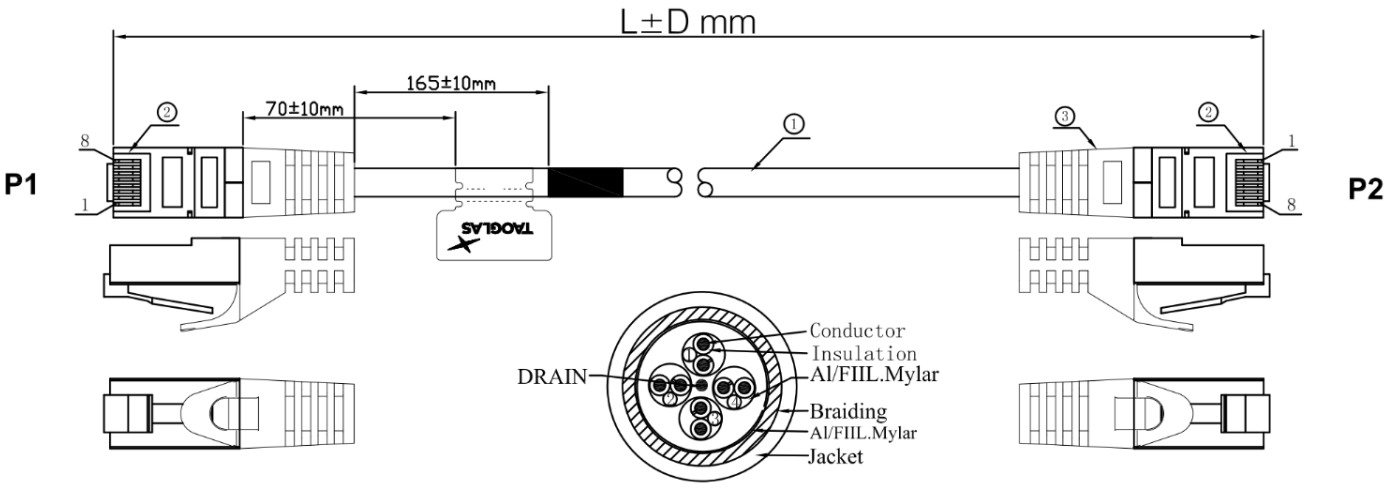

P/N	L	D
TEC11WHT1.0914	914mm (3ft)	± 30 mm
TEC11WHT1.1829	1829mm (6ft)	± 30 mm
TEC11WHT1.3048	3048mm (10ft)	± 50 mm
TEC11WHT1.4572	4572mm (15ft)	± 50 mm

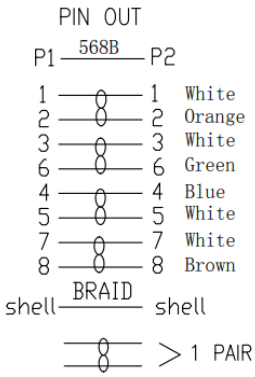

Specification	
Outer Diameter (OD)	6.3 ± 0.2mm
Cable construction	Drain Wire (1/0.40BC)
	26AWG (7/0.16BC 1Pair + AL/FOIL) x 4
	AL/FOIL
	Braiding (5/16/0.10TC)
	PVC JACKET
Connector 1	RJ45
Connector 2	RJ45

P/N	Cable Weight (g)
TEC11WHT1.0914	50.11
TEC11WHT1.1829	88
TEC11WHT1.3048	141.11
TEC11WHT1.4572	208.5

3.2 Cable label

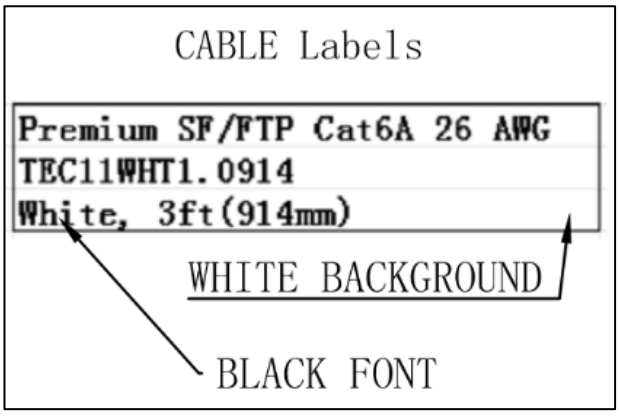

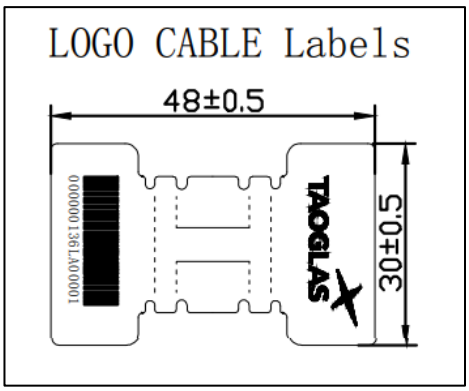

Print:www.taoglas.com TAOGLAS CAT6A SF/FTP COPPER PVC PATCH CABLE CONFORMS TO ISO/IEC 11801 & EN 50288 & TIA/EIA 568 D.2 c(ETL)us 5027866 Listed 4PR 26AWG 60° C STRANDED

3.3 Plug

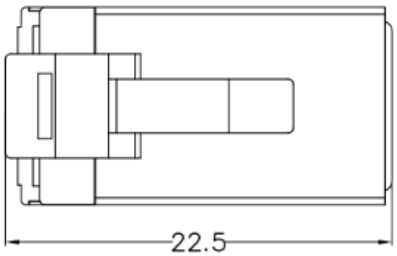
22.5

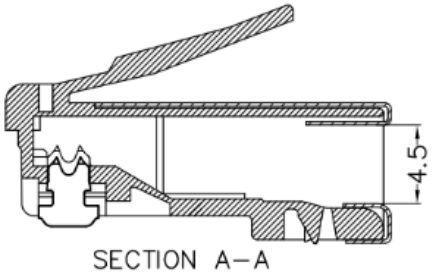
4.5
SECTION A–A

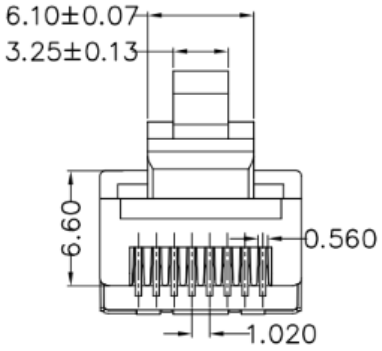
6.10±0.07
3.25±0.13
6.60
0.560
1.020

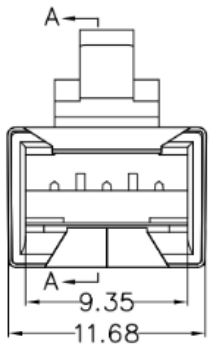
A
A
9.35
11.68

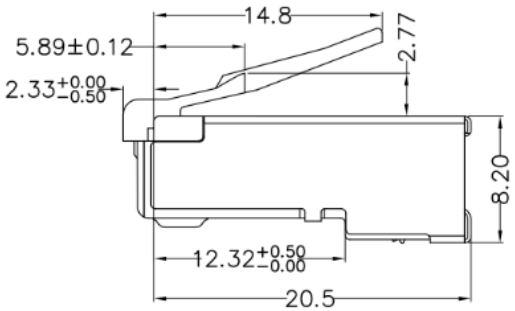
14.8
5.89±0.12
2.33+0.00 −0.50
2.77
8.20
12.32+0.50 −0.00
20.5

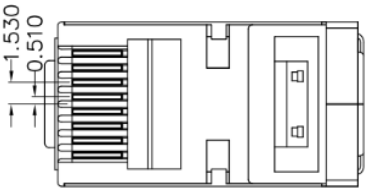
1.530
0.510

3.4 Boot

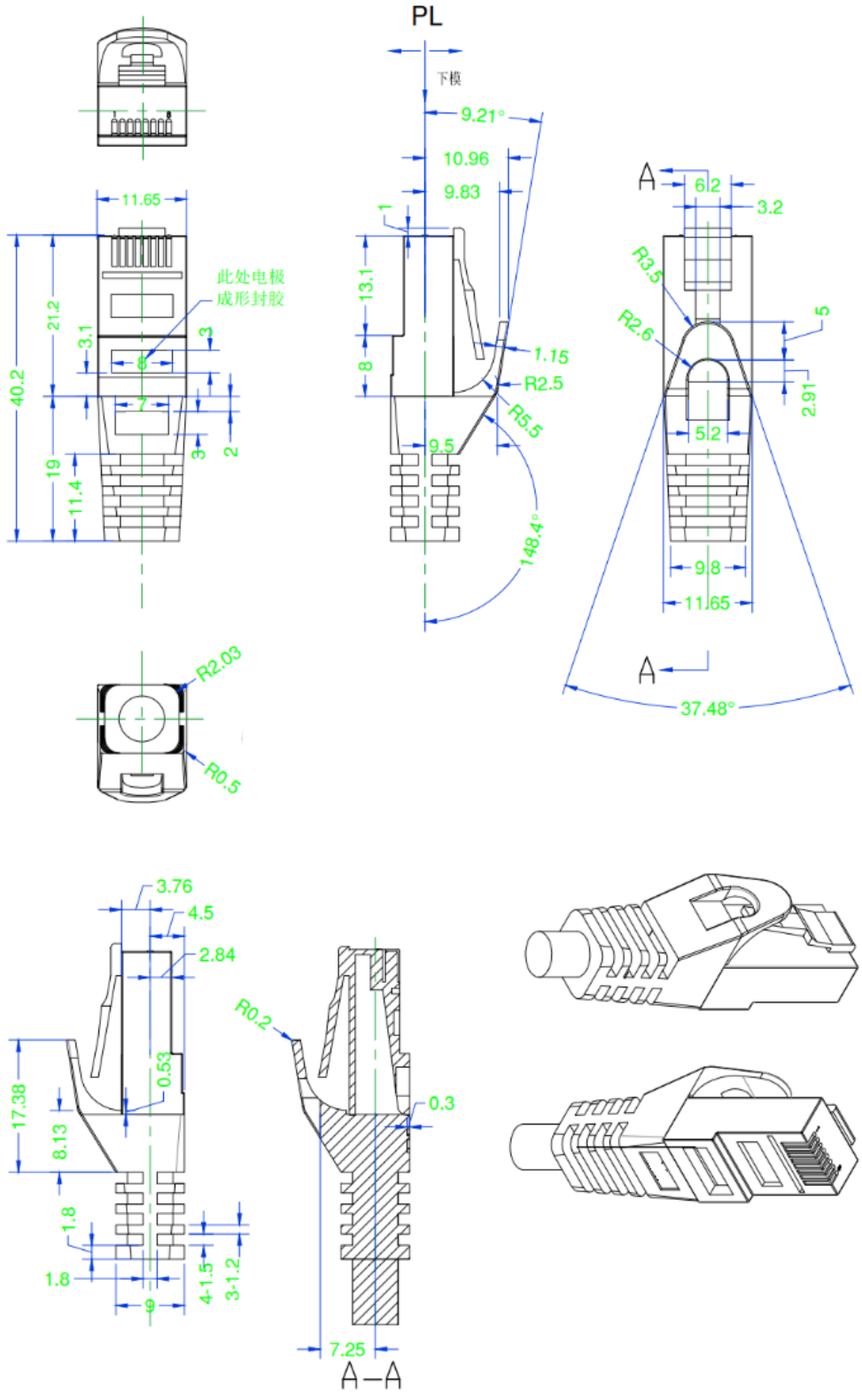
PL
下模
9.21°
10.96
9.83
1
13.1
8
1.15
R2.5
R5.5
9.5
148.4°
11.65
此处电极
成形封胶
40.2
21.2
3.1
3
7
3
2
19
11.4
A
6.2
3.2
R3.5
R2.6
5
2.91
5.2
9.8
11.65
A
37.48°
R2.03
R0.5
3.76
4.5
2.84
0.53
17.38
8.13
1.8
1.8
4-1.5
3-1.2
R0.2
0.3
7.25
A–A

4. Part numbers

4.1 TEC11WHT1 Series

P/N	Colour	Length
TEC11WHT1.0914	White	3ft (914mm)
TEC11WHT1.1829	White	6ft (1829mm)
TEC11WHT1.3048	White	10ft (3048mm)
TEC11WHT1.4572	White	15ft (4572mm)

5. Packaging

5.1 SPQ

1 pcs/bag

Bag dimension: 210*265 mm

Taoglas P/N	Winding Cable Size (D*D)	SPQ Weight
TEC11WHT1.0914	120*120mm	60.11g
TEC11 WHT1.1829	150*150mm	98g
TEC11 WHT1.3048	160*160mm	151.11g
TEC11 WHT1.4572	160*160mm	218.5g





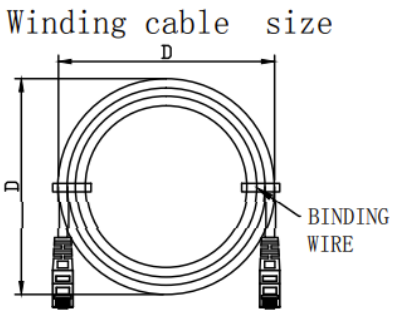

5.2 Bag Label

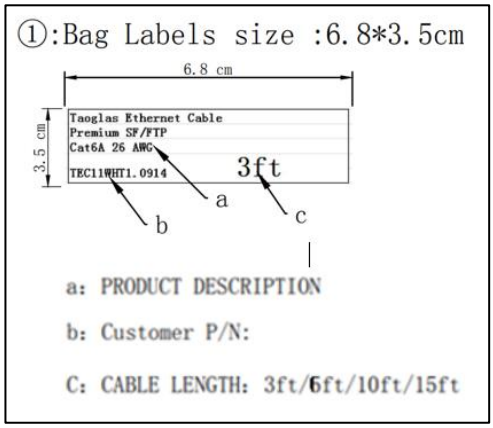

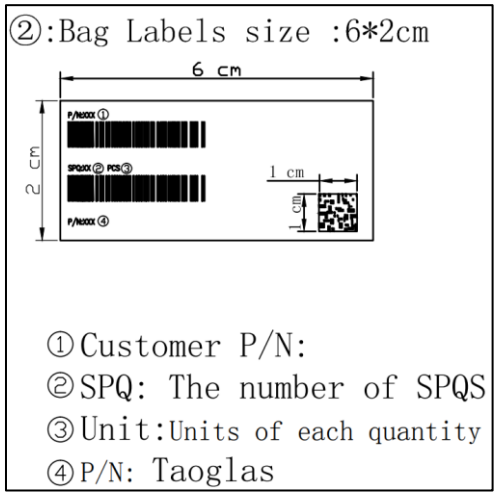

5.3 Carton

Carton dimensions: 400*300*280mm



Taoglas P/N	Bags per Carton	Gross Carton Weight
TEC11WHT1.0914	120pcs/carton	7743.2 g
TEC11 WHT1.1829	70pcs/carton	7390 g
TEC11 WHT1.3048	45pcs/carton	7329.95 g
TEC11 WHT1.4572	40pcs/carton	9270 g

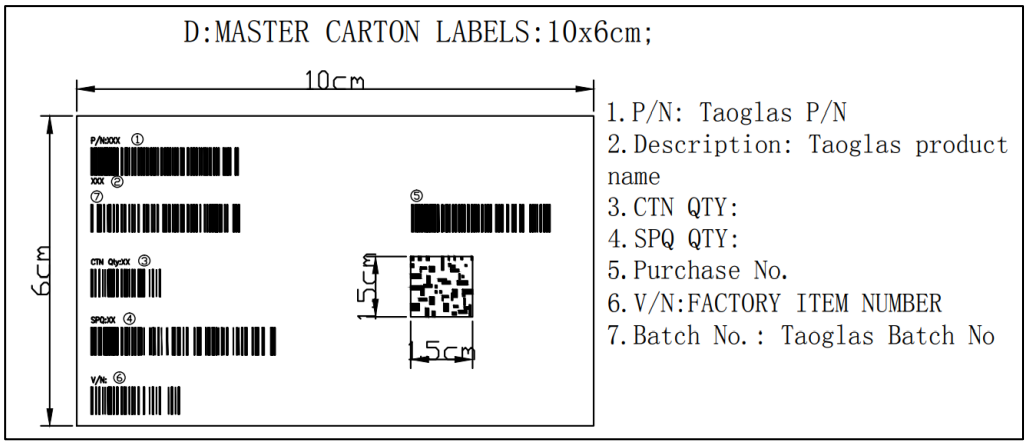

Changelog

Changelog for the datasheet

SPE-23-8-292 – TEC11WHT1

Revision: A (Original First Release)	
Date:	2024-01-01
Notes:	
Author:	Javier Vasena

Previous Revisions

TAOGLAS®

www.taoglas.com



© Taoglas

Unikeyic Electronics

Global Electronic Components Distributor

Click to view pricing, inventory, delivery, and lifecycle information:

TAOGLAS:

FXUB70.A.07.C.001 TG.55.8113W FXUB66.01.0150C PMB.MA9.01 QHA.50.A.301111 TI.42.A113 TI.84.A113 A.80.A.101111 FXP830.24.0100B GSA.8827.A.101111 LLP.5875.Y.A.30 MA251.A.BI.001 OMB.868.B05F21 RECE.20449.001E.01 TG.30.8112 FK2FIG TI.45.A113 WS.03.B.305151 FK.G3.SMBFST.D.AP FXUB71.A.54.C.001 ALA.01.07.0095A ISA.05.A.033822 PC104.07.0165C FXC.46.A.DG LLP.2500.X.B.30 TI.33.A111 AGGBP.SLS.25A.07.0060A PCB.MMCXFRAJ.A AGGBP.SLS.18A.07.0060A EMPCB.SMAMST.A