New

Electro-Pneumatic Regulator
Electronic Vacuum Regulator

CE c UL us LISTED

RoHS IP65

- Stepless control of air pressure proportional to an electrical signal
- Added Fieldbus compliant specifications to Series ITV1000/2000/3000!

New

Reduced wiring

Applicable Fieldbus protocols

CC-Link DeviceNet PROFIBUS

Built-in communication board, so no converter needed.



Added RS-232C specification to serial communications!

Compact/lightweight (Integrated communicatioin parts)

Weight: 350 g Note 1) **(ITV1000)**

Power consumption: 4 W Note 1) **or less**

Note 1) Value for communications type. (PROFIBUS DP)

Note 2) ITV1000. Dimensions in parentheses ( ) are for the CC-Link or PROFIBUS DP.

▼ Electro-Pneumatic Regulators

Series ITV0000



Maximum flow rate
6 ℓ/min (ANR)
Set pressure: 0.6 MPa
Supply pressure: 1.0 MPa

Series ITV1000



Maximum flow rate
200 ℓ/min (ANR)
Set pressure: 0.6 MPa
Supply pressure: 1.0 MPa
Grease-free specification (wetted parts)

Series ITV2000



Maximum flow rate
1500 ℓ/min (ANR)
Set pressure: 0.6 MPa
Supply pressure: 1.0 MPa

Series ITV3000



Maximum flow rate
4000 ℓ/min (ANR)
Set pressure: 0.6 MPa
Supply pressure: 1.0 MPa

▼ Electronic Vacuum Regulators

Series ITV009□



Series ITV209□



Series ITV

SMC

CAT.EUS60-15F-UK

Compact Electro-Pneumatic Regulator *Series ITV0000*
Compact Vacuum Regulator *Series ITV009□*



Compact 15 mm
With a simplified high-density circuit board design, an extremely compact size has been achieved.



Lightweight 100 g

Realizes space-saving and reduction of weight for manifold use.

Stations can easily be increased or decreased due to DIN rail mount design.

Model	Pressure range	Power supply voltage	Input signal	Output signal	Option
ITV001□	0.1 MPa	24 VDC 12 VDC	4 to 20 mA DC 0 to 20 mA DC 0 to 5 VDC 0 to 10 VDC	Analogue output 1 to 5 V	• Cable connectors Straight type Right angle type • Brackets Flat bracket L-bracket
ITV003□	0.5 MPa				
ITV005□	0.9 MPa				
ITV009□	–100 kPa				

■ Cable connectors

Straight type and right angle type are available.

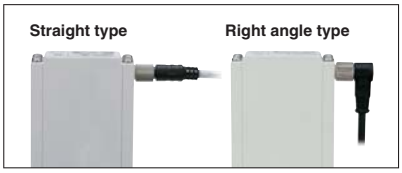

■ Built-in One-touch fittings
■ With error indication LED
■ Brackets

Flat and L-brackets are available.


Flat bracket


L-bracket

● Equivalent to IP65
● Linearity: Within ±1% (F.S.)
Hysteresis: Within 0.5% (F.S.)
Repeatability: Within ±0.5% (F.S.)
● High-speed response time: 0.1 sec (Without load)
● High stability

Sensitivity within 0.2% (F.S.)

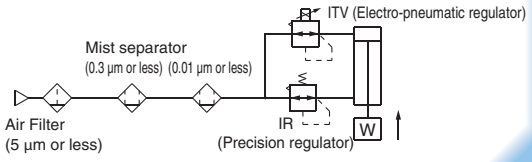

Electro-Pneumatic Regulator *Series ITV1000/2000/3000*
Electronic Vacuum Regulator *Series ITV209□*



New **Added Fieldbus compliant specifications to Series *ITV1000/2000/3000*!**

● Reduced wiring

Applicable Fieldbus protocols

CC-Link DeviceNet PROFIBUS

New **Added RS-232C specification to serial communications!**


ITV1000


ITV2000


ITV3000


ITV2090

● Sensitivity: Within 0.2% (F.S.)
● Linearity: Within ±1% (F.S.)
● Hysteresis: Within 0.5% (F.S.)
● IP65
● Cable connections in 2 directions

Straight type

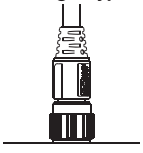

Right angle type

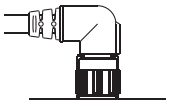

● Grease-free specification (Series ITV1000)

● Application examples

Multi-stage control to analogue control

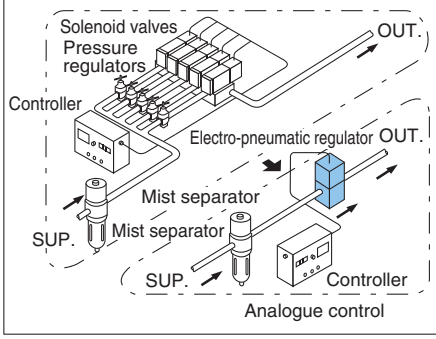

Electrostatic coating control

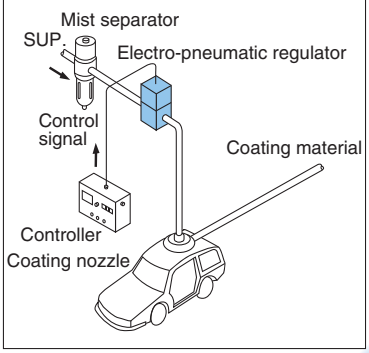

Electro-Pneumatic Regulator
Electronic Vacuum Regulator

Series ITV

● Stepless control of air pressure proportional to an electrical signal.

	Series	Model	Set pressure range	Input signal	Port size	Page
Electro-Pneumatic Regulator	Series ITV0000 	ITV001□	0.001 to 0.1 MPa	Current type: 4 to 20 mA DC Current type: 0 to 20 mA DC Voltage type: 0 to 5 VDC Voltage type: 0 to 10 VDC	Built-in One-touch fittings Metric size: ø4 Inch size: ø5/32	1
		ITV003□	0.001 to 0.5 MPa			
		ITV005□	0.001 to 0.9 MPa			
	Series ITV1000 New 	ITV101□	0.005 to 0.1 MPa	Current type: 4 to 20 mA DC (Sink type) Current type: 0 to 20 mA DC (Sink type) Voltage type: 0 to 5 VDC Voltage type: 0 to 10 VDC Preset input New CC-Link compatible New DeviceNet™ compatible New PROFIBUS DP compatible New RS-232C communication	1/8, 1/4	9
		ITV103□	0.005 to 0.5 MPa			
		ITV105□	0.005 to 0.9 MPa			
	Series ITV2000 New 	ITV201□	0.005 to 0.1 MPa		1/4, 3/8	9
		ITV203□	0.005 to 0.5 MPa			
		ITV205□	0.005 to 0.9 MPa			
	Series ITV3000 New 	ITV301□	0.005 to 0.1 MPa		1/4, 3/8, 1/2	9
		ITV303□	0.005 to 0.5 MPa			
		ITV305□	0.005 to 0.9 MPa			
Electronic Vacuum Regulator	Series ITV009□ 	ITV009□	−1 to −100 kPa	Current type: 4 to 20 mA DC Current type: 0 to 20 mA DC Voltage type: 0 to 5 VDC Voltage type: 0 to 10 VDC	Built-in One-touch fittings Metric size: ø4 Inch size: ø5/32	28
	Series ITV209□ New 	ITV209□	−1.3 to −80 kPa	Current type: 4 to 20 mA DC (Sink type) Current type: 0 to 20 mA DC (Sink type) Voltage type: 0 to 5 VDC Voltage type: 0 to 10 VDC Preset input New CC-Link compatible New DeviceNet™ compatible New PROFIBUS DP compatible New RS-232C communication	1/4	35

Compact Electro-Pneumatic Regulator

Series ITV0000

CE RoHS

How to Order

For single unit and single unit for manifold

ITV00 [1] [0] – [3] [ ] [ ] [ ] [ ]

Pressure range

1	0.1 MPa
3	0.5 MPa
5	0.9 MPa

Power supply voltage

0	24 VDC ±10%
1	12 to 15 VDC

Input signal

0	Current type 4 to 20 mA DC
1	Current type 0 to 20 mA DC
2	Voltage type 0 to 5 VDC
3	Voltage type 0 to 10 VDC

Built-in One-touch fittings type

For single unit

Symbol		SUP 1	OUT 2	EXH 3
—	Metric size (Light grey)	ø4		
U	Inch size (Orange)	ø5/32"		

For manifold

Symbol		SUP 1	OUT 2	EXH 3
—	Metric size (Light grey)	ø6	ø4	ø6
U	Inch size (Orange)	ø1/4"	ø5/32"	ø1/4"

Cable connector (Option)

N	Without cable connector
S	Straight type 3 m
L	Right angle type 2 m

Bracket/Option for single unit only

—	Without bracket
B	Flat Bracket 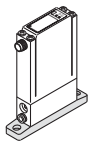
C	L-bracket 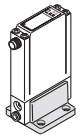

Base type

—	For single unit
M	For manifolds

Manifold

IITV00 – [02] [ ] – [n]

Stations

02	2 stations
03	3 stations
⋮	⋮
10	10 stations

Option

If a DIN rail longer than the specified stations is required, specify the applicable stations in two digits.
(Maximum 10 stations)
Example) **IITV00-05-07**

One-touch fitting size for supply/exhaust parts (End plate)

—	ø6 (Light grey)
U	ø1/4" (Orange)

Note) A DIN rail with the length specified by the number of stations is attached to the manifold. For dimensions of the DIN rail, refer to the external dimensions.

How to Order Manifold Assembly (Example)

Indicate the part numbers of electro-pneumatic regulators and options to be mounted below the manifold part number.

Example)
Due to the common supply/exhaust feature, note that different pressure range combinations are not available.

IITV00-03·····1 set (Manifold part no.)
∗ITV0030-3MS·····2 sets (Electro-pneumatic regulator part no. (1, 2 stations))
∗ITV0030-3ML·····1 set (Electro-pneumatic regulator part no. (3 stations))

Indicate part numbers in order starting from the first station on the D side.

Note) Combination with having different pressure ranges is not available due to common supply/exhaust features.

The asterisk (∗) specifies mounting. Add an asterisk (∗) at the beginning of electro-pneumatic regulator part numbers to be mounted.

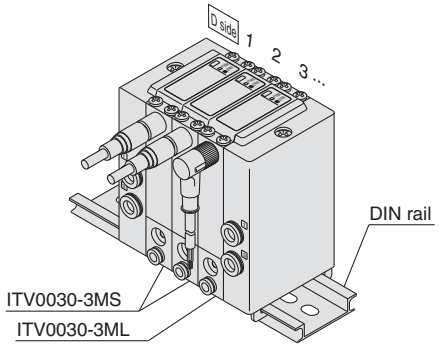

SMC

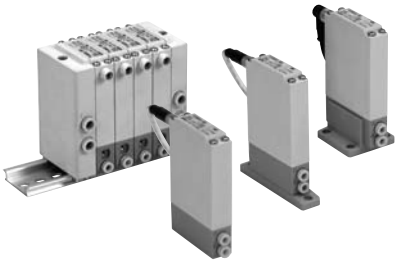

Specifications

Model		ITV001□	ITV003□	ITV005□
Minimum supply pressure		Set pressure +0.1 MPa		
Maximum supply pressure		0.2 MPa	1.0 MPa	
Set pressure range		0.001 to 0.1 MPa	0.001 to 0.5 MPa	0.001 to 0.9 MPa
Maximum flow rate		3.5 ℓ/min(ANR) (Supply pressure: 0.2 MPa)	6 ℓ/min(ANR) (Supply pressure: 0.6 MPa)	6 ℓ/min(ANR) (Supply pressure: 0.6 MPa)
Power supply	**Voltage**	24 VDC ±10%, 12 to 15 VDC		
	Current consumption	Power supply voltage 24 VDC type: 0.12 A or less Power supply voltage 12 to 15 VDC type: 0.18 A or less		
Input signal	**Voltage type**	0 to 5 VDC, 0 to 10 VDC		
	Current type	4 to 20 mA DC, 0 to 20 mA DC		
Input impedance	**Voltage type**	Approximately 10 kΩ		
	Current type	Approximately 250 Ω		
Output signal	**Analogue output**	1 to 5 VDC (Output impedance: Approximately 1 kΩ) Output accuracy: Within ±6% (Full span)		
Linearity		Within ±1% (Full span)		
Hysteresis		Within 0.5% (Full span)		
Repeatability		Within ±0.5% (Full span)		
Sensitivity		Within 0.2% (Full span)		
Temperature characteristics		Within ±0.12% (Full span)/°C		
Operating temperature range		0 to 50°C (No condensation)		
Enclosure		Equivalent to IP65 *		
Connection type		Built-in One-touch fittings		
Connection size	**For single unit**	Metric size	[1], [2], [3]: ø4	
		Inch size	[1], [2], [3]: ø5/32"	
	Manifold	Metric size	[1], [3]: ø6, [2]: ø4	
		Inch size	[1], [3]: ø1/4", [2]: ø5/32"	
Weight Note 1)		100 g or less (without option)		

Note 1) Indicates the weight of a single unit.
For IITV00-n
Total weight (g) Stations (n) x 100 + 130 (Weight of end block A, B assembly) + Weight (g) of DIN rail

Note 2) When there is a downstream flow consumption, pressure may become unstable depending on piping conditions.

Note 3) When the power is turned on, a noise may be generated. This noise is normal and does not indicate a fault.

* When using under the conditions equivalent to IP65, connect the fitting or tube to the breathing hole prior to use. (For details, refer to "Specific Product Precautions 1" on page 41)

Accessories (Option)

Bracket

Flat bracket assembly (includes 2 mounting screws)
P39800022



L-bracket assembly (includes 2 mounting screws)
P39800023



Tighting torque when assembling is 0.3 N·m.

Cable connector

Straight type
M8-4DSX3MG4



Right angle type
P398000-501-2



Working Principle

When the input signal rises, the air supply soloenoid valve ① turns ON. Due to this, part of the supply pressure passes through the air supply solenoid valve ① and changes to output pressure. This output pressure feeds back to the control circuit ④ via the pressure sensor ③. Here, pressure corrections continue until output pressure becomes proportional to the input signal, enabling output pressure that is proportional to the input signal.

Diagram of working principle

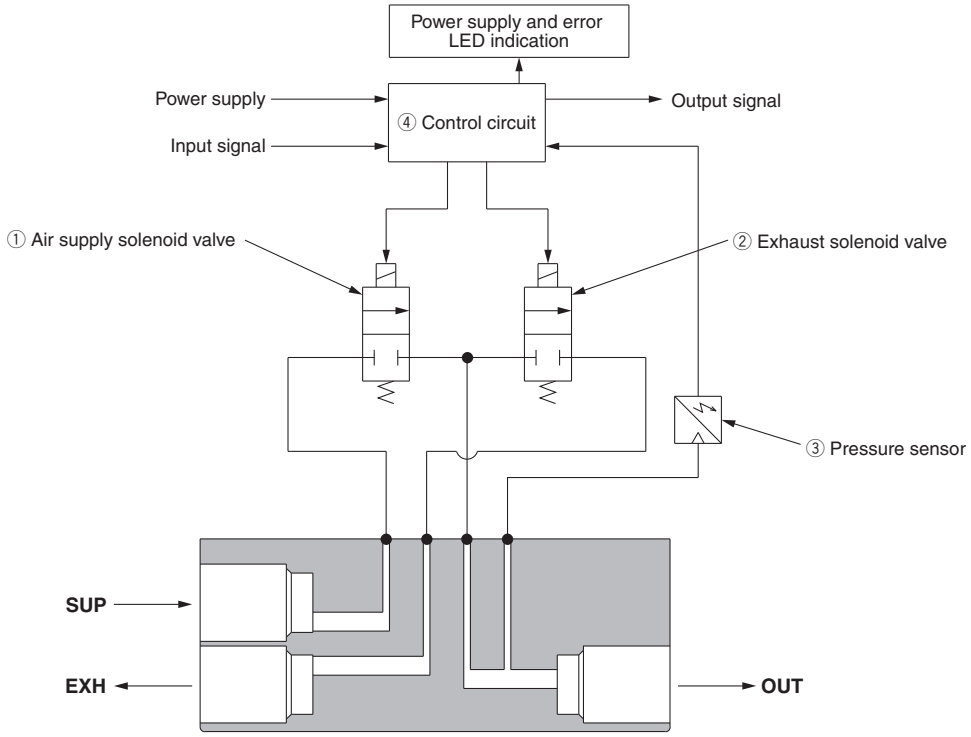

Block diagram

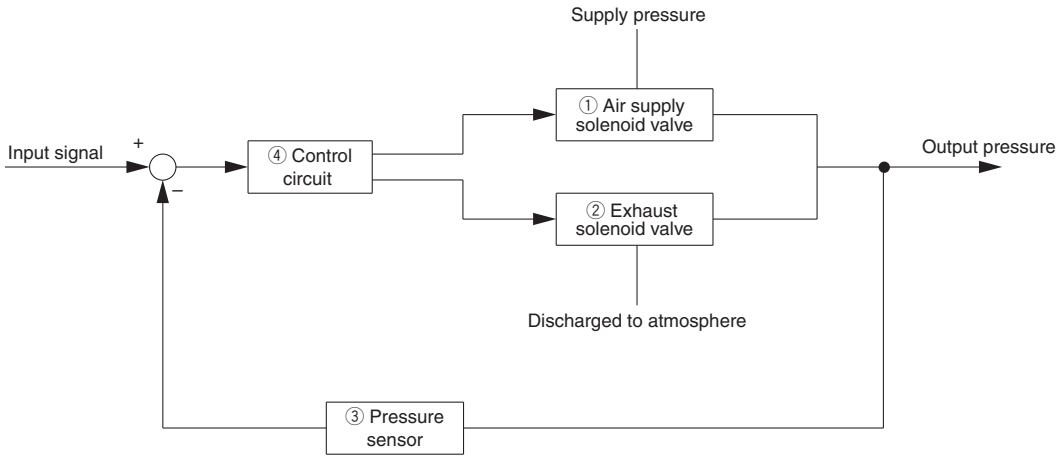

Series ITV001□

Linearity, Hyteresis

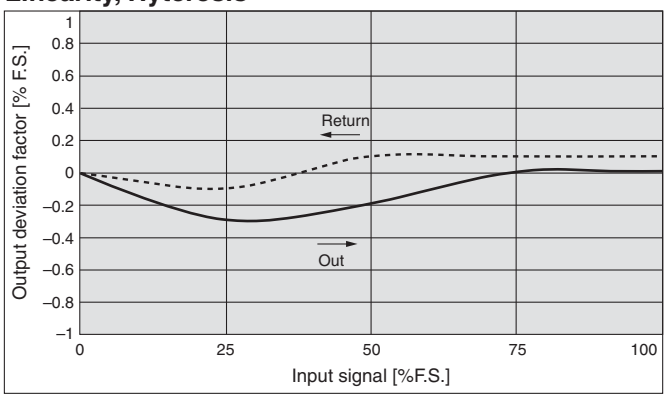

Repeatability

With 50% of signal input

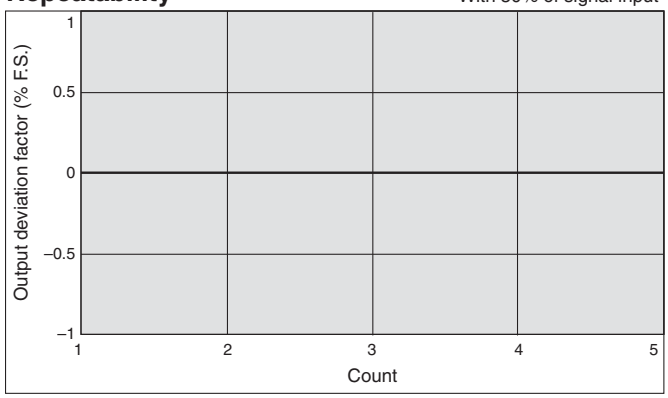

Pressure Characteristics

Set pressure: 0.05 MPa

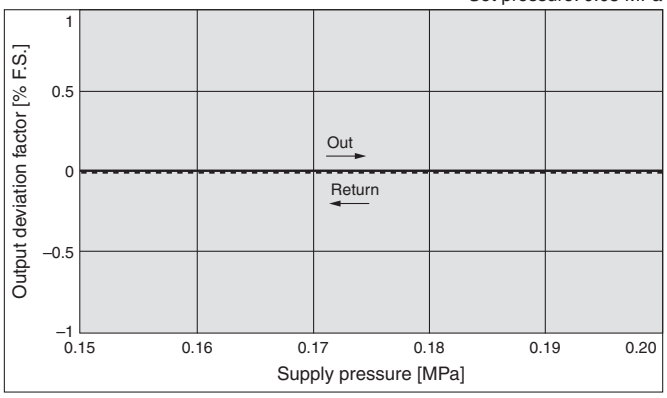

Flow Characteristics

Supply pressure: 0.2 MPa

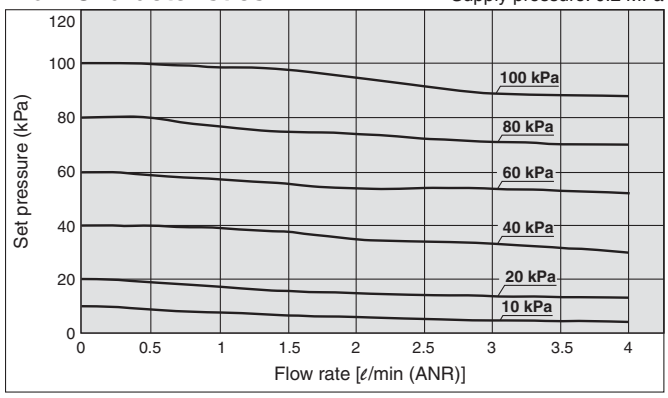

Series ITV003□

Linearity, Hyteresis

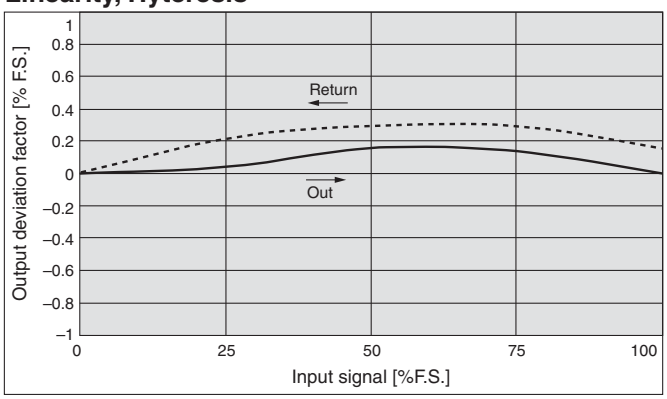

Repeatability

With 50% of signal input

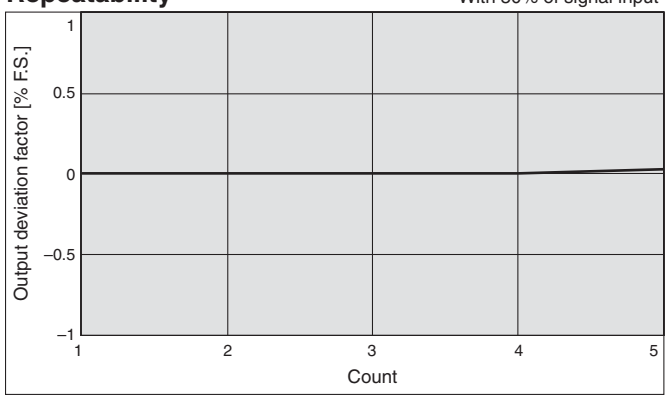

Pressure Characteristics

Set pressure: 0.25 MPa

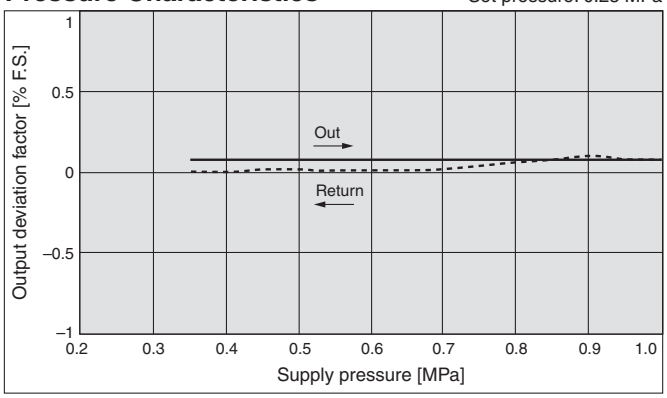

Flow Characteristics

Supply pressure: 0.6 MPa

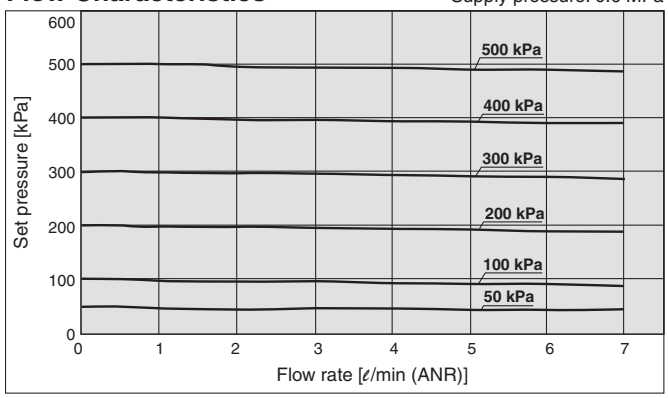

Series ITV005□

Linearity, Hyteresis

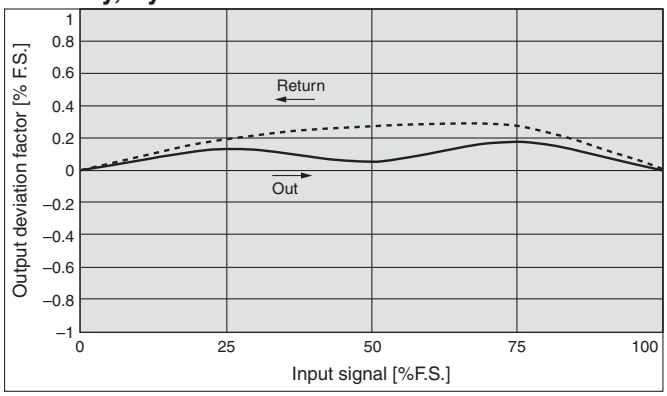

Repeatability

With 50% of signal input

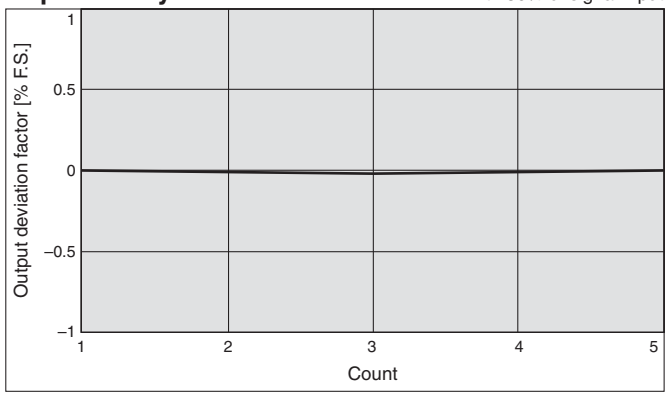

Pressure Characteristics

Set pressure: 0.45 MPa

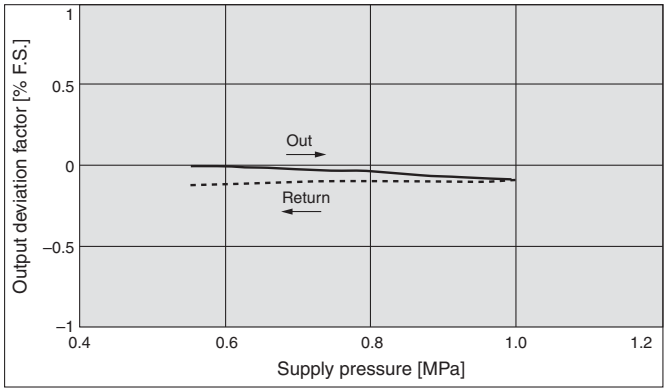

Flow Characteristics

Supply pressure: 1.0 MPa

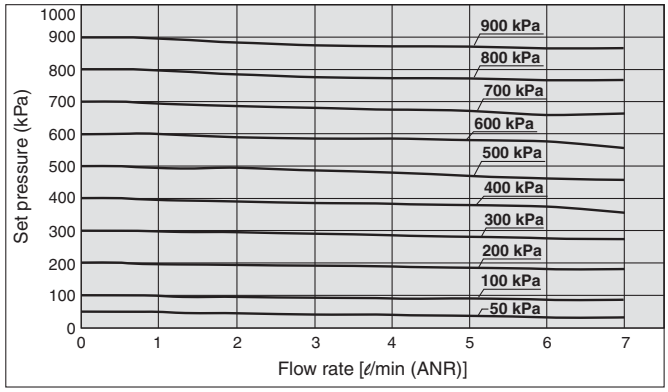

Dimensions

For Single Unit

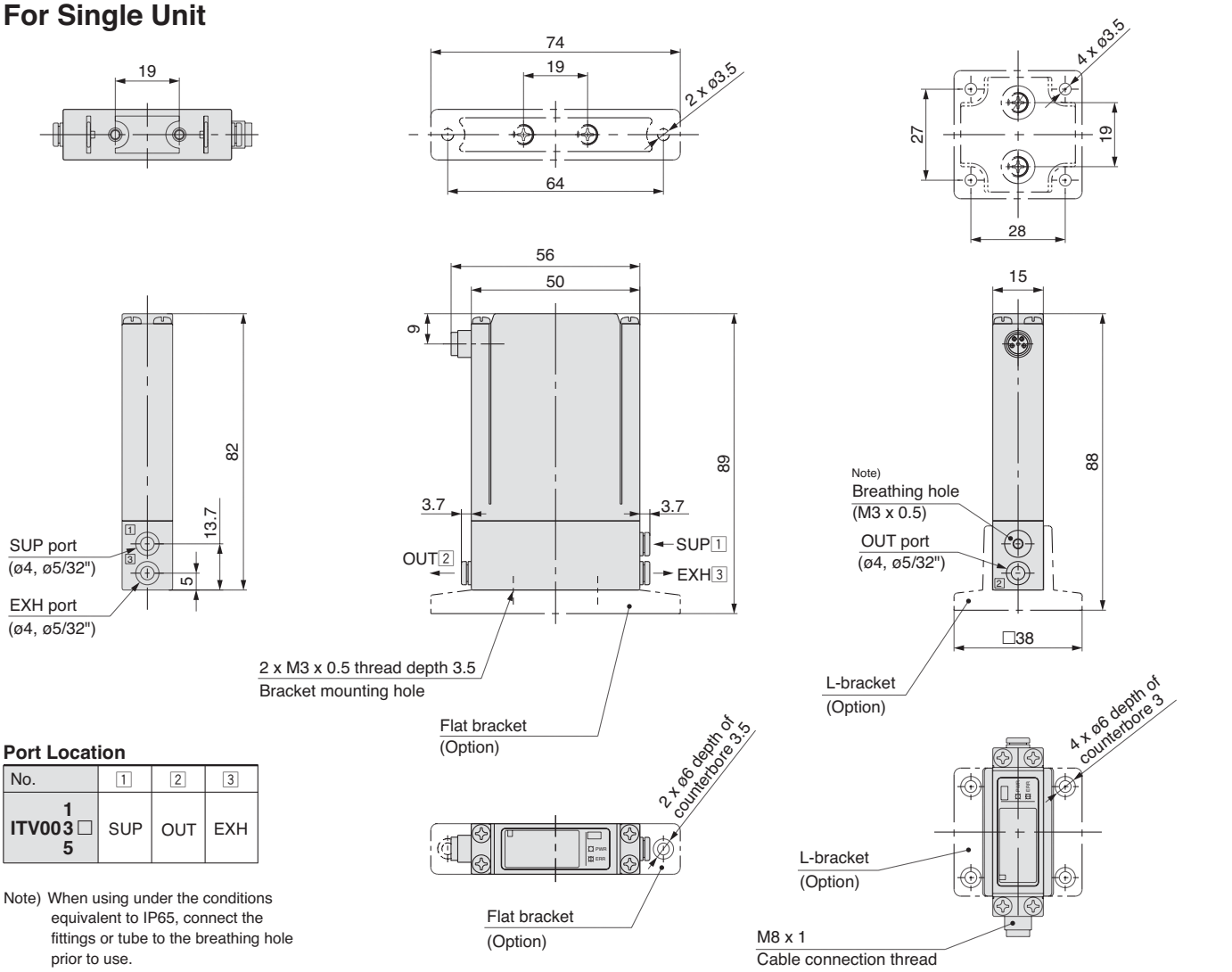

Port Location

No.	1	2	3
1 ITV003□ 5	SUP	OUT	EXH

Note) When using under the conditions equivalent to IP65, connect the fittings or tube to the breathing hole prior to use.
(For details, refer to "Specific Product Precautions 1" on page 41)

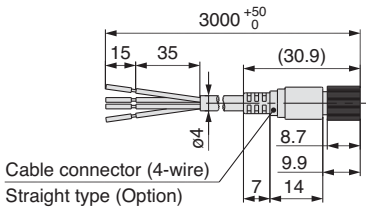

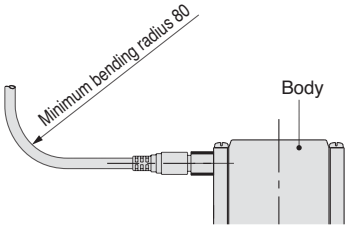

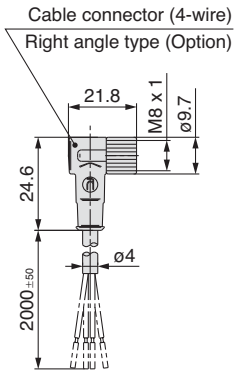

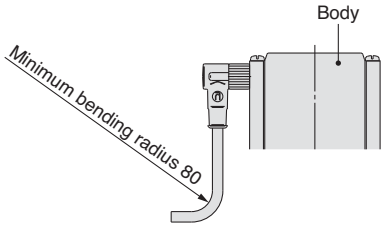

Dimensions

Single unit for manifold

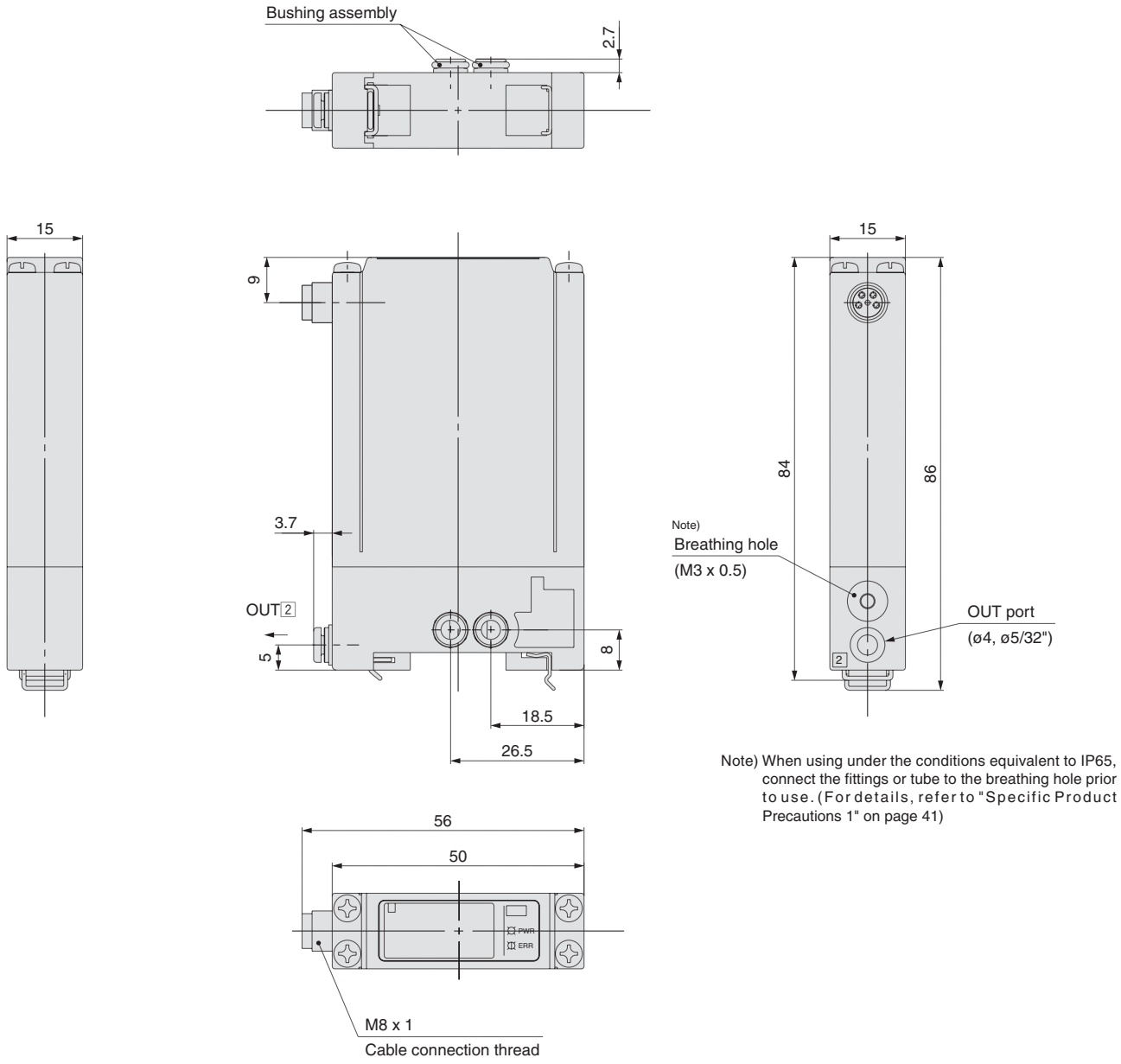

Note) When using under the conditions equivalent to IP65, connect the fittings or tube to the breathing hole prior to use. (For details, refer to "Specific Product Precautions 1" on page 41)

Note) For dimensions of the cable connector, refer to single unit on page 6.

Dimensions

Manifold

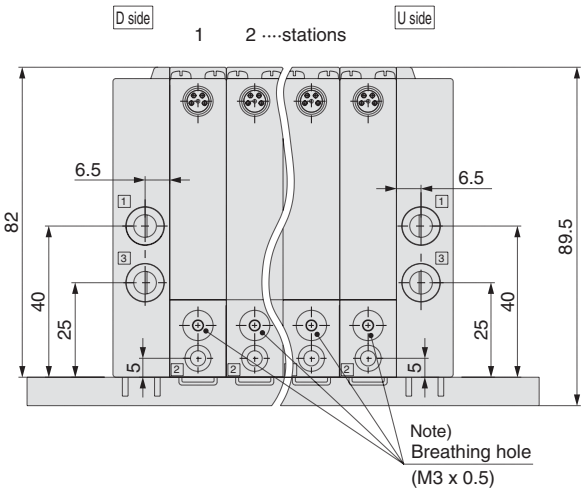

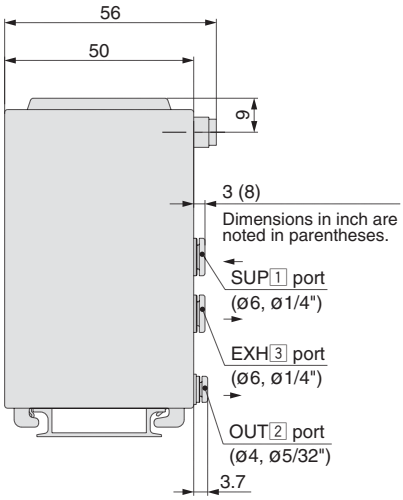

Note) When using under the conditions equivalent to IP65, connect the fittings or tubing to the breathing hole prior to use. (For details, refer to "Specific Product Precautions 1" on page 41).

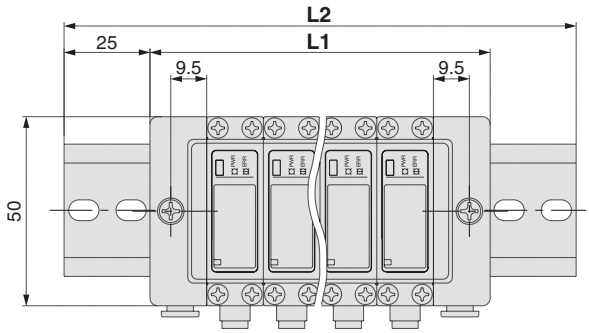

Port Location

No.	1	2	3
ITV003□5	SUP	OUT	EXH

Note) Stations are counted starting from the D side.

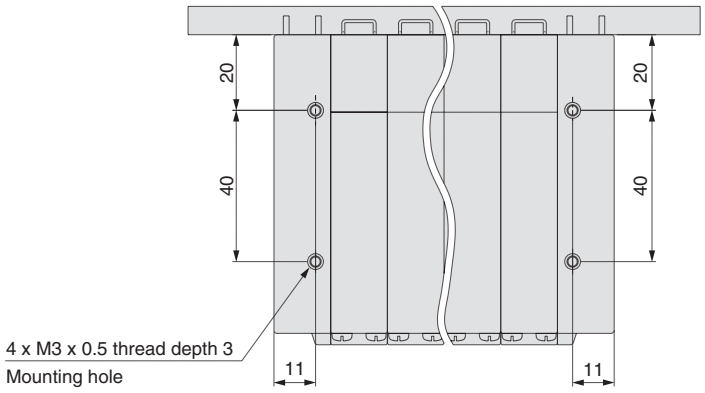

Note) For dimensions of the cable connector, refer to single unit on page 6.

[mm]

Manifold stations n	2	3	4	5	6	7	8	9	10
L1	60	75	90	105	120	135	150	165	180
L2	110.5	123	148	160.5	173	185.5	198	223	235.5
Weight of DIN rail [g]	20	22	27	29	31	34	36	41	43

Electro-Pneumatic Regulator

Series ITV1000/2000/3000

How to Order

ITV 3 0 1 0 – 0 1 F 2 S –

Model

1	1000 type
2	2000 type
3	3000 type

Pressure range

1	0.1 MPa
3	0.5 MPa
5	0.9 MPa

Power supply voltage

0	24 VDC
1	12 to 15 VDC

Note) Communication models (CC, DE PR, RC) are available only for 24 VDC.

Input signal/ Communication model

0	Current type 4 to 20 mA DC (Sink type)
1	Current type 0 to 20 mA DC (Sink type)
2	Voltage type 0 to 5 VDC
3	Voltage type 0 to 10 VDC
40	4 points preset input
52	16 points preset input (Switch output/NPN output)
53	16 points preset input (Switch output/PNP output)
60	10 bit digital input
CC	CC-Link
DE	DeviceNet™
PR	PROFIBUS DP
RC	RS-232C communication

Monitor output

1	Analogue output 1 to 5 VDC
2	Switch output/NPN output
3	Switch output/PNP output
4	Analogue output 4 to 20 mA DC (Sink type/+COM type)[Note 1)]
—	None

Note) For -COM type, see page 25 for details.

Thread type

—	Rc
N	NPT
T	NPTF
F	G

Port size

1	1/8 (1000 type)
2	1/4 (1000, 2000, 3000 type)
3	3/8 (2000, 3000 type)
4	1/2 (3000 type)

Bracket

—	Without bracket
B	Flat bracket
C	L-bracket

Cable connector type

S	Straight type 3 m
L	Right angle type 3 m
N	Without cable connector

Note) Order communication cable (other than RS-232C) separately. See below.

Pressure display unit

—	MPa
2	kgf/cm²
3	bar
4	psi
5	kPa

Note) For the communication models, CC, DE, PR and RC, only "—" is available as it does not have a pressure display.

Made to Order Specifications

Refer to pages 11, 25, 26 and 27 for details.

For communication cables, use the parts listed below
(refer to the catalogue [M8/M12 Connector] CAT.ES100-73 for details)
or order the product certified for the respective protocol (with M12 connector) separately.

Application	Communication cable part number	Remarks
CC-Link compatibility	PCA-1567720 (Socket type)	Dedicated Bus adapter supplied with the product.
	PCA-1567717 (Plug type)	
DeviceNet™ compatibility	PCA-1557633 (Socket type)	T-branch connector not supplied.
	PCA-1557646 (Plug type)	
PROFIBUS DP compatibility	PCA-1557688 (Socket type)	T-branch connector not supplied.
	PCA-1557691 (Plug type)	



ITV1000



ITV2000



ITV3000



Fieldbus-compatible model

JIS Symbol

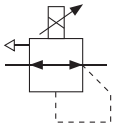

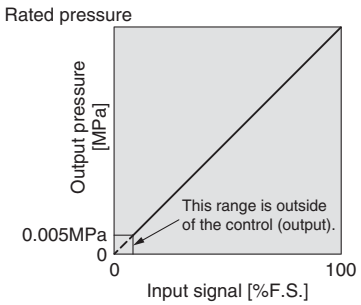

Figure 1. Input/output characteristics chart

Standard Specifications

Model		ITV101□ Note 10)	ITV103□ Note 10)	ITV105□ Note 10)
		ITV201□	ITV203□	ITV205□
		ITV301□	ITV303□	ITV305□
Minimum supply pressure		Set pressure +0.1 MPa		
Maximum supply pressure		0.2 MPa	1.0 MPa	
Set pressure range Note 1)		0.005 to 0.1 MPa	0.005 to 0.5 MPa	0.005 to 0.9 MPa
Power supply	Voltage	24 VDC ±10%, 12 to 15 VDC		
	Current consumption	Power supply voltage 24 VDC type: 0.12 A or less Note 8) Power supply voltage 12 to 15 VDC type: 0.18 A or less		
Input signal	Current type Note 2)	4 to 20 mA DC, 0 to 20 mA DC (Sink type)		
	Voltage type	0 to 5 VDC, 0 to 10 VDC		
	Preset input	4 points (Negative common), 16 points (No common polarity)		
Input impedance	Current type	250 Ω or less Note 6)		
	Voltage type	Approx. 6.5 kΩ		
	Preset input	Power supply voltage 24 VDC type: Approx. 4.7 kΩ Power supply voltage 12 VDC type: Approx. 2.0 kΩ		
Output signal (monitor output) Note 3)	Analogue output	1 to 5 VDC (Output impedance: Approximately 1 kΩ) 4 to 20 mA DC (Sink type) (Load impedance: 250Ω or less) Output accuracy within ±6% (Full span)		
	Switch output	NPN open collector output: Max. 30 V, 80 mA PNP open collector output: Max. 80 mA		
Linearity		Within ±1% (Full span)		
Hysteresis		Within 0.5% (Full span)		
Repeatability		Within ±0.5% (Full span)		
Sensitivity		Within 0.2% (Full span)		
Temperature characteristics		Within ±0.12% (Full span)/C		
Output pressure display Note 4)	Accuracy	±2%F.S. ±1 digit		
	Minimum unit	MPa: 0.001, kgf/cm^2: 0.01, bar: 0.01, psi: 0.1 Note 5) , kPa: 1		
Ambient and fluid temperature		0 to 50°C (No condensation)		
Enclosure		IP65		
Weight Note 9)	ITV10□□	Approx. 250 g (without options)		
	ITV20□□	Approx. 350 g (without options)		
	ITV30□□	Approx. 645 g (without options)		

Note 1) Please refer to Figure 1 for the relationship between set pressure and input. Because the maximum set pressure differs for each pressure display, refer to page 45.
Note 2) 2-wire type 4 to 20 mA DC is not available. Power supply voltage (24 VDC or 12 to 15 VDC) is required.
Note 3) Select either analogue output or switch output.
Further, when switch output is selected, select either NPN output or PNP output.
Note 4) Adjustment of numerical values such as the zero/span adjustment or preset input type is set based on the minimum units for output pressure display (e.g. 0.01 to 0.50 MPa). Note that the unit cannot be changed.
Note 5) The minimum unit for 0.9 MPa (130 psi) types is 1 psi.
Note 6) Value for the state with no over current circuit included. If an allowance is provided for an over current circuit, the input impedance varies depending on the input current. This is 350 Ω or less for an input current of 20 mA DC.
Note 7) The above characteristics are confined to the static state. When air is consumed on the output side, the pressure may fluctuate.
Note 8) For communication models, the maximum current consumption is 0.16 A or less.
Note 9) For communication models, add roughly 80 g to the weight (100 g for the PROFIBUS DP).
Note 10) The ITV1000 series is a Grease-free specification (Wetted parts).

Communication Specifications (CC, DE, PR, RC)

Model	ITV□0□0-CC	ITV□0□0-DE	ITV□0□0-PR	ITV□0□0-RC
Protocol	CC-Link	DeviceNet™	PROFIBUS DP	RS-232C
Version Note 1)	Ver 1.10	Volume 1 (Edition 3.8), Volume 3 (edition 1.5)	DP-V0	—
Communication speed	156 k/625 k 2.5 M/5 M/10 M bps	125 k/250 k/500 k bps	9.6 k/19.2 k/45.45 k 93.75 k/187.5 k/500 k 1.5 M/3 M/6 M/12 M bps	9.6 kbps
Configulation file Note 2)	—	EDS	GSD	—
I/O occupation area (input/output data)	4 word/4 word, 32 bit/32 bit (per station, remote device station)	16 bit/16 bit	16 bit/16 bit	—
Communication data resolution	12 bit (4096 resolution)	12 bit (4096 resolution)	12 bit (4096 resolution)	10 bit (1024 resolution)
Fail safe	HOLD Note 3)/CLEAR (Switch setting)	HOLD/CLEAR (Switch setting)	CLEAR	HOLD
Electric insulation Note 4)	No	No	Yes	No
Terminating resistor	—		Built into the product (Switch setting)	—

Note 1) Note that version information is subject to change.
Note 2) Configulation files can be downloaded from the SMC's website: http://www.smcworld.com
Note 3) The output HOLD value when a CC-Link communications error occurs can be set based on the bit area data.
Note 4) The insulation between the electrical signal of the communication system and ITV power supply.

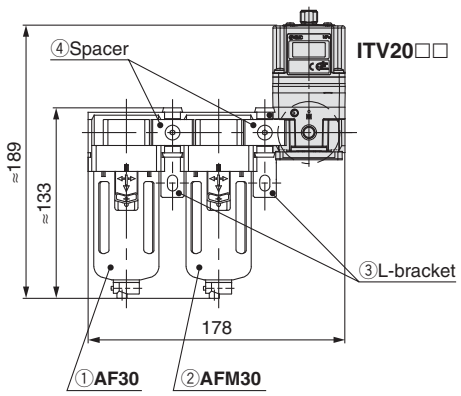

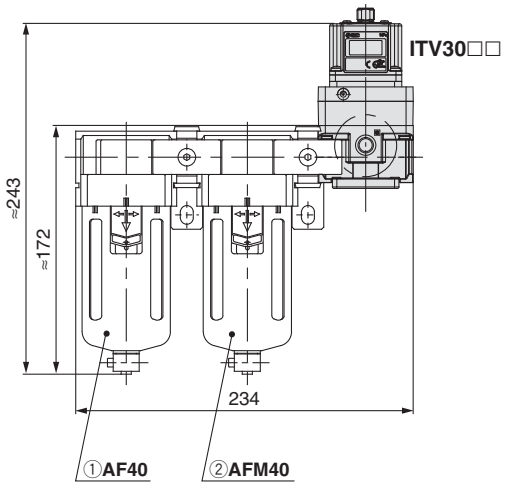

Combinations

◎ Standard specifications ○ Combination possible ▭ Combination not possible

∗ ITV10□□ models are not applicable.

Specifications		Symbol	Applicable model	
			ITV20□□	ITV30□□
Standard specifications	Set pressure max. 0.1 MPa	1	◎	◎
	Set pressure max. 0.5 MPa	3	◎	◎
	Set pressure max. 0.9 MPa	5	◎	◎
	Connection Rc 1/4	02	◎	◎
	Connection Rc 3/8	03	◎	◎
	Connection Rc 1/2	04		◎
Acces-sories	Bracket	B	○	○
	Bracket	C	○	○
Optional specifications	Connection NPT1/4	N02	○	○
	Connection NPT3/8	N03	○	○
	Connection NPT1/2	N04		○
	Connection G 1/4	F02	○	○
	Connection G 3/8	F03	○	○
	Connection G 1/2	F04		○

Modular Products and Accessory Combinations

∗ ITV10□□ models are not applicable.

Applicable products and accessories	Applicable model	
	ITV20□□	ITV30□□
① Air filter	AF30	AF40
② Mist separator	AFM30	AFM40
③ L-bracket	B310L	B410L
④ Spacer	Y30	Y40
⑤ Spacer with L-bracket (③ + ④)	Y30L	Y40L
⑥ Spacer with T-bracket	—	Y40T

Accessories (Option)/Part No.

Description		Part No.		
		ITV10□□	ITV20□□	ITV30□□
Flat bracket assembly (including mounting screws)		KT-ITV-F1	KT-ITV-F2	
L-bracket assembly (including mounting screws)		KT-ITV-L1	KT-ITV-L2	
Power cable connector	Straight type 3 m	P398020-500-3		
	Right angle type 3 m	P398020-501-3		
Bus adapter (CC-Link model only)		EX9-ACY00-MJ		

Dimensions

Flat bracket

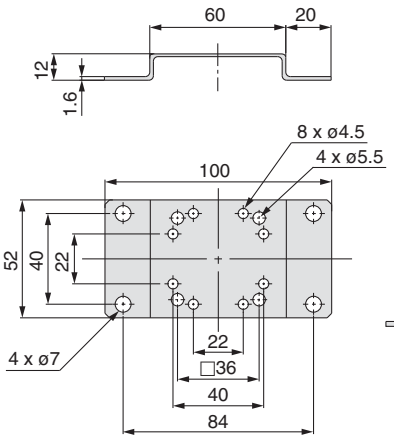

L-bracket

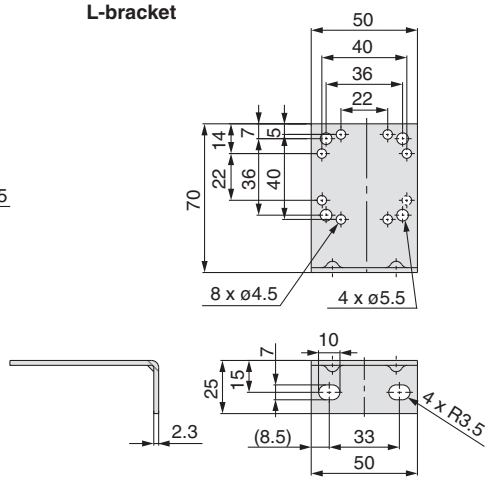

Made to Order
(Refer to pages 25, 26 and 27 for details.)

Symbol	CE-compliant	Specifications
X256	Compliant	Monitor analogue output 4-20mA (source type/-COM type)
X157	Compliant	Digital input type
X102	Compliant	Reverse type
X224	Compliant	High pressure type (SUP 1.2 MPa, OUT 1.0 MPa)
X25	Compliant	Set pressure range 1 to 100 kPa (Except Series ITV3000)
X410	Compliant	Linearity ±0.5% F.S. or less
X420	Compliant	With alarm output
X88	Compliant	High speed response type (Except Series ITV3000)
X26	Compliant	For manifold mounting (Except Series ITV3000)

Note 1) Manifolds are compatible with 2 to 8 stations. Consult with SMC for 9 stations or more.
Note 2) Products without symbols are also compatible. Consult with SMC separately.

Working Principles

When the input signal rises, the air supply solenoid valve ① turns ON, and the exhaust solenoid valve ② turns OFF. Therefore, supply pressure passes through the air supply solenoid valve ① and is applied to the pilot chamber ③. The pressure in the pilot chamber ③ increases and operates on the upper surface of the diaphragm ④.
As a result, the air supply valve ⑤ linked to the diaphragm ④ opens, and a portion of the supply pressure becomes output pressure.
This output pressure feeds back to the control circuit ⑧ via the pressure sensor ⑦. Here, a correct operation functions until the output pressure is proportional to the input signal, making it possible to always obtain output pressure proportional to the input signal.

Working Principle Diagram

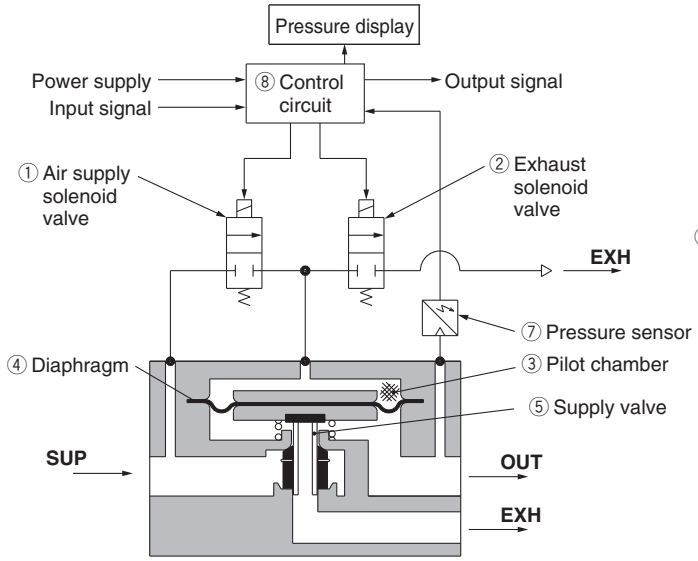

ITV1000

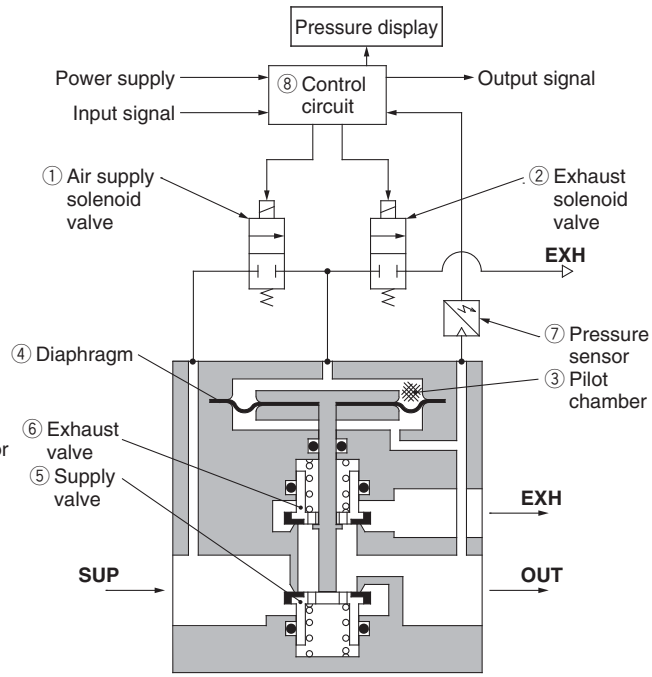

ITV2000, 3000

Block diagram

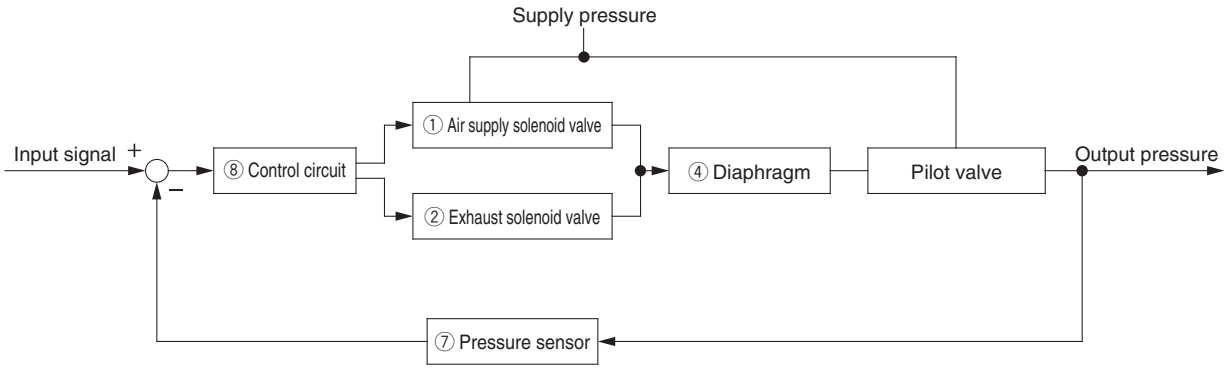

Series ITV101□

Linearity

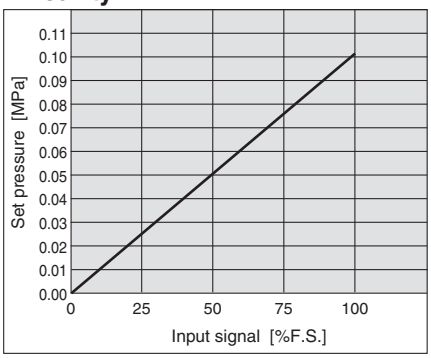

Hysteresis

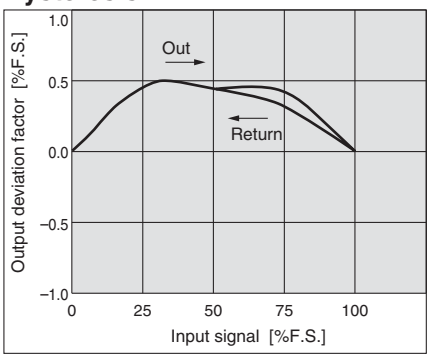

Repeatability

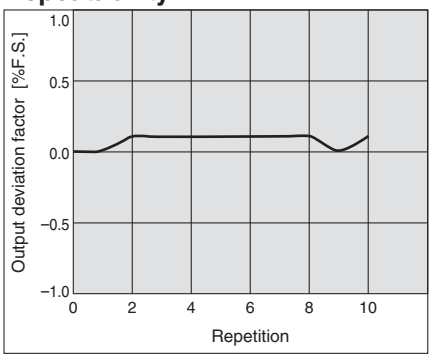

Pressure characteristics

Set pressure: 0.05 MPa

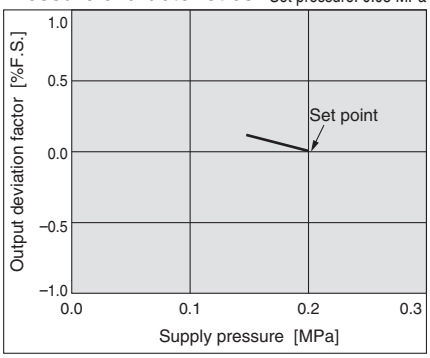

Flow characteristics

Supply pressure: 0.2 MPa

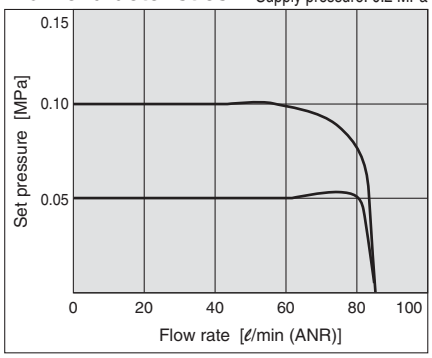

Relief flow characteristics

Supply pressure: 0.2 MPa

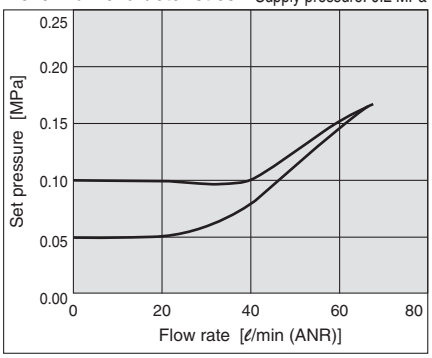

Series ITV201□

Linearity

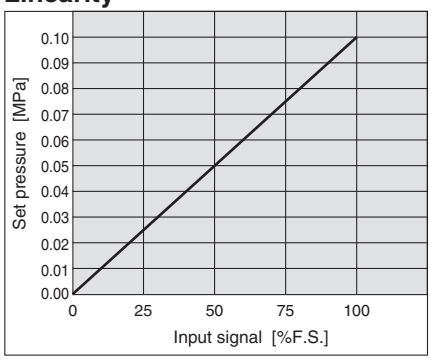

Hysteresis

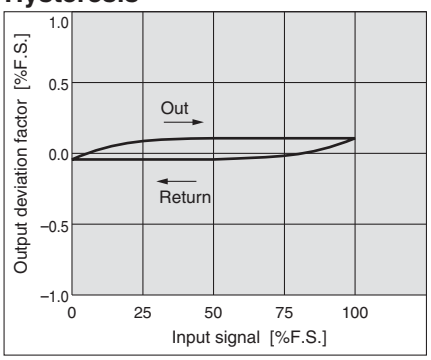

Repeatability

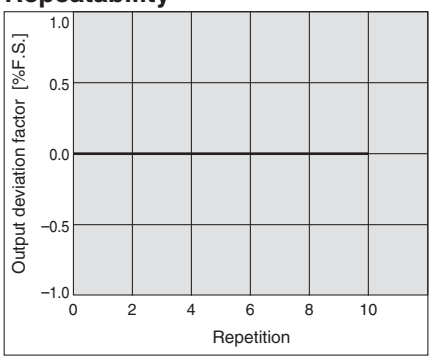

Pressure characteristics

Set pressure: 0.05 MPa

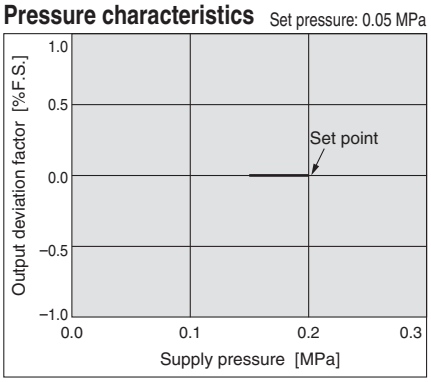

Flow characteristics

Supply pressure: 0.2 MPa

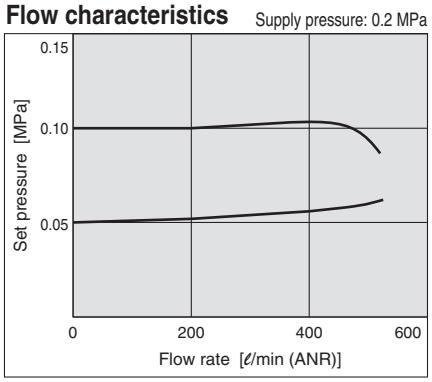

Relief flow characteristics

Supply pressure: 0.2 MPa

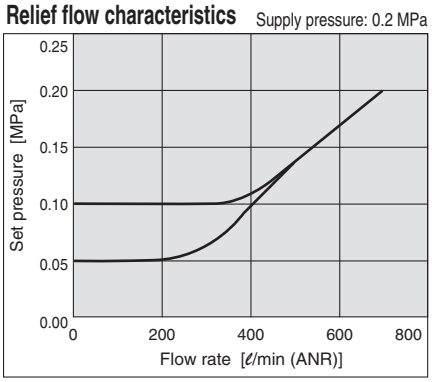

Series ITV301□

Linearity

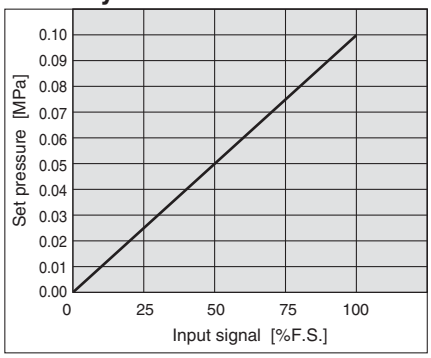

Hysteresis

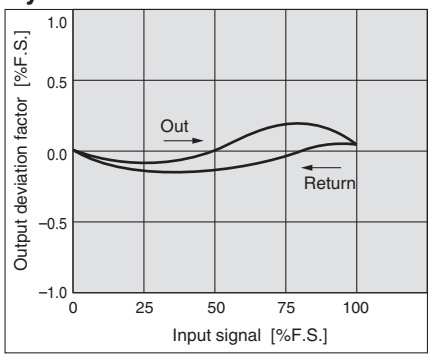

Repeatability

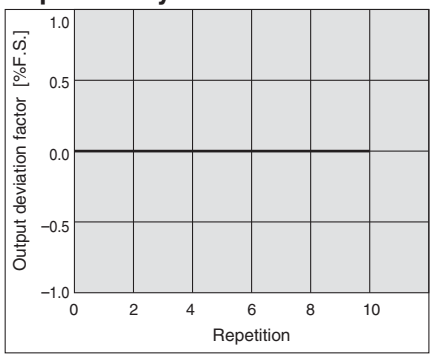

Pressure characteristics

Set pressure: 0.05 MPa

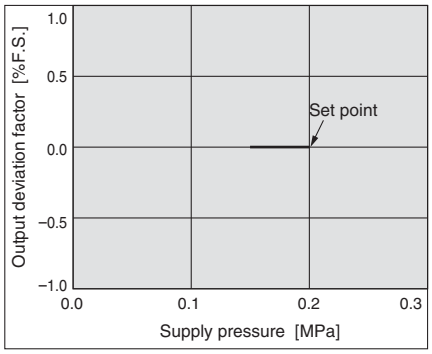

Flow characteristics

Supply pressure: 0.2 MPa

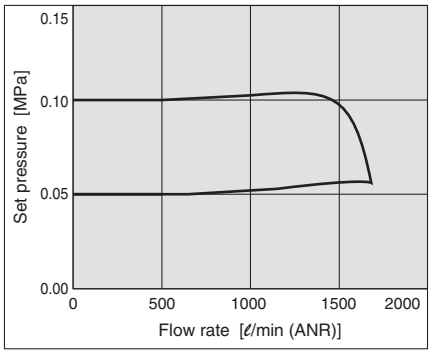

Relief flow characteristics

Supply pressure: 0.2 MPa

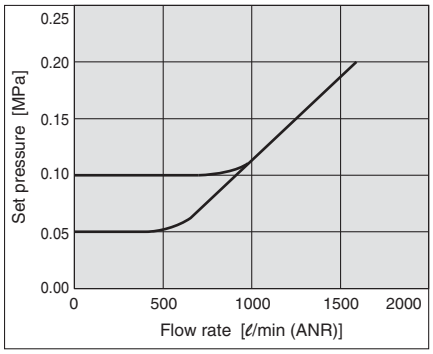

Series ITV103□

Linearity

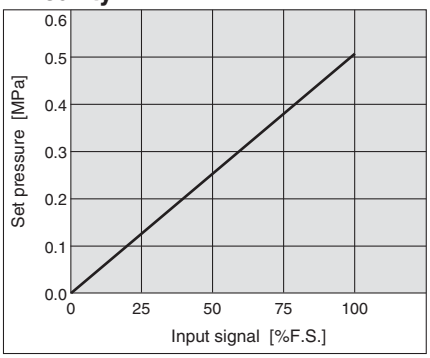

Hysteresis

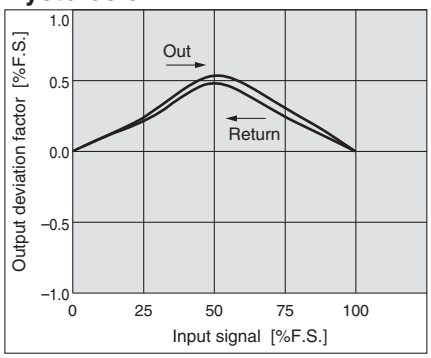

Repeatability

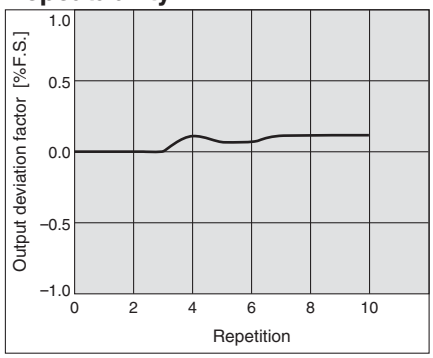

Pressure characteristics

Set pressure: 0.2 MPa

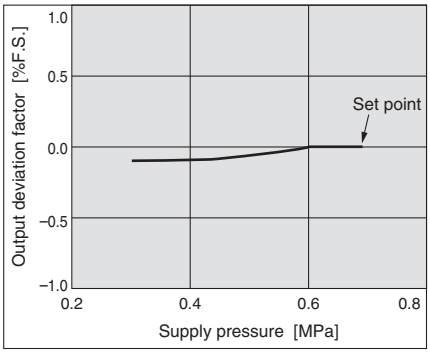

Flow characteristics

Supply pressure: 0.7 MPa

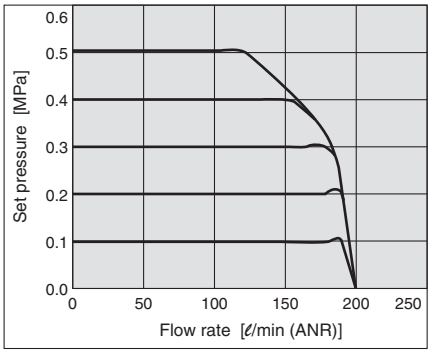

Relief flow characteristics

Supply pressure: 0.7 MPa

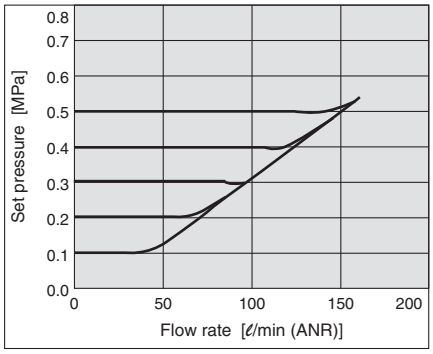

Series ITV203□

Linearity

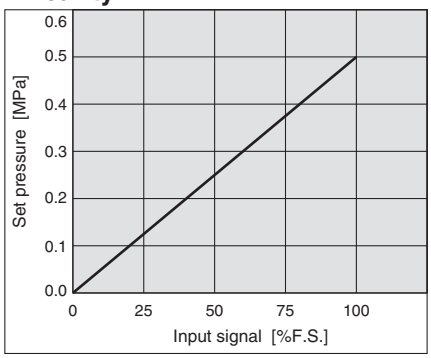

Hysteresis

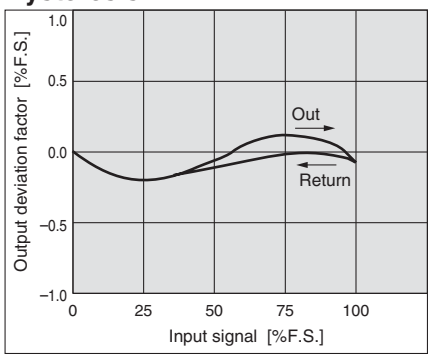

Repeatability

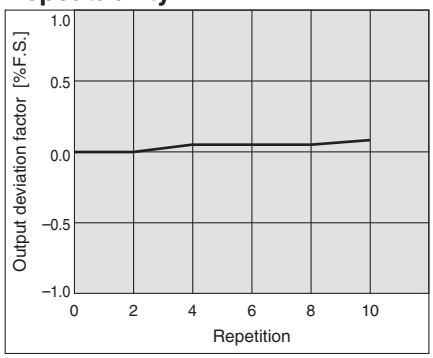

Pressure characteristics

Set pressure: 0.2 MPa

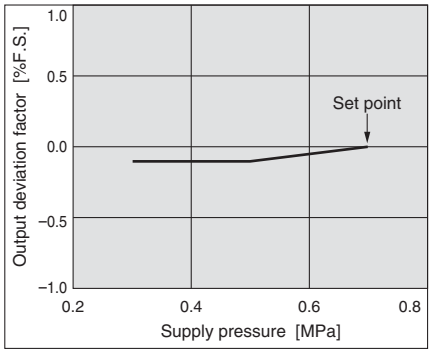

Flow characteristics

Supply pressure: 0.7 MPa

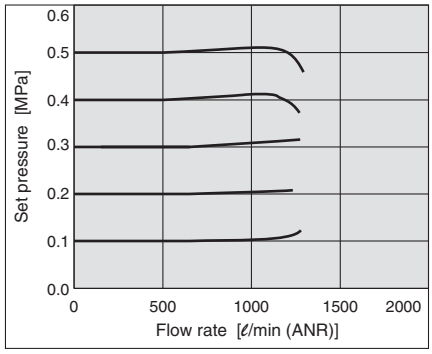

Relief flow characteristics

Supply pressure: 0.7 MPa

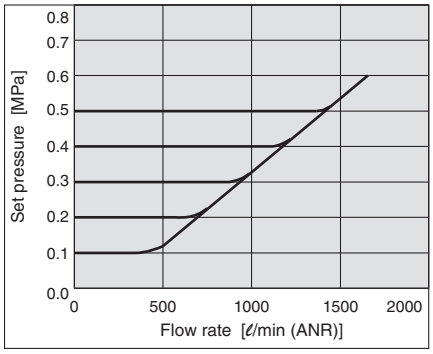

Series ITV303□

Linearity

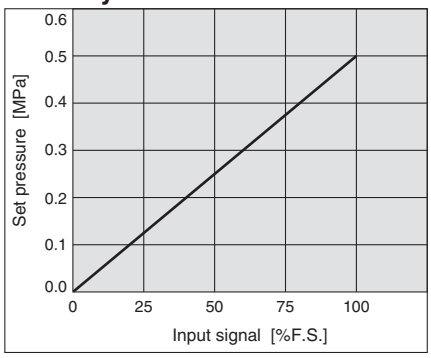

Hysteresis

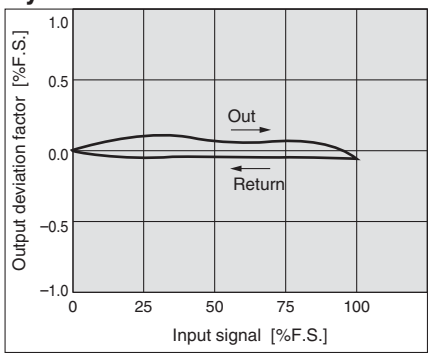

Repeatability

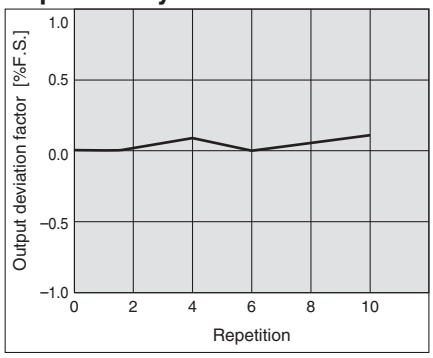

Pressure characteristics

Set pressure: 0.2 MPa

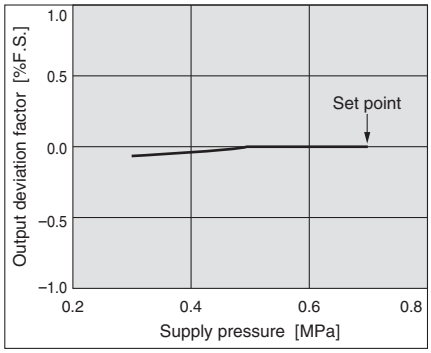

Flow characteristics

Supply pressure: 0.7 MPa

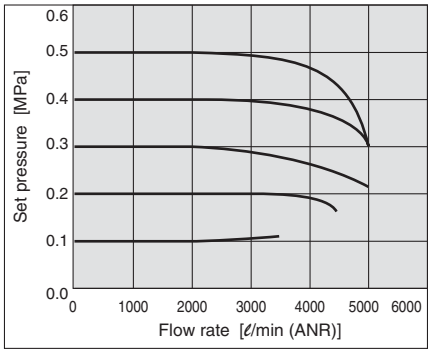

Relief flow characteristics

Supply pressure: 0.7 MPa

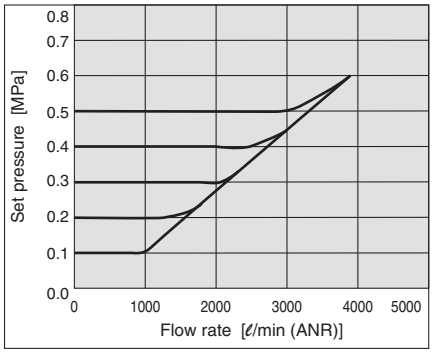

Series ITV105□

Linearity

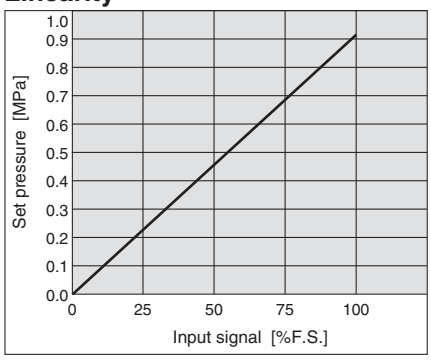

Hysteresis

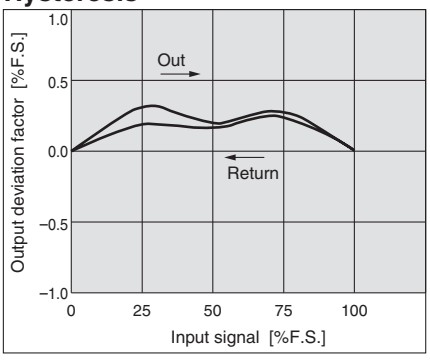

Repeatability

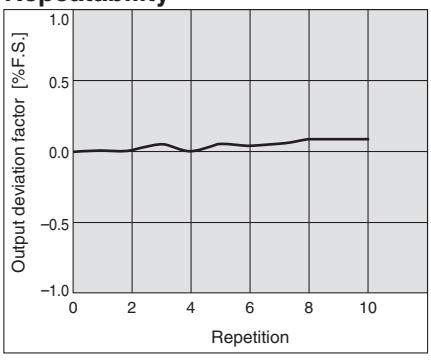

Pressure characteristics

Set pressure: 0.4 MPa

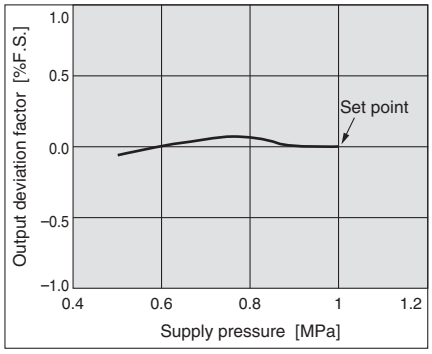

Flow characteristics

Supply pressure: 1.0 MPa

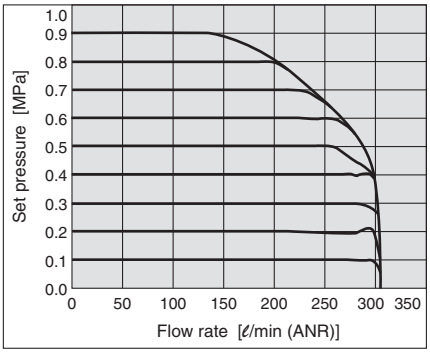

Relief flow characteristics

Supply pressure: 1.0 MPa

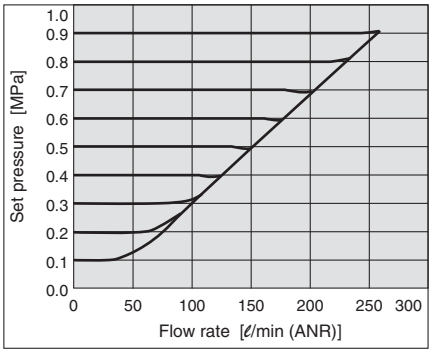

Series ITV205□

Linearity

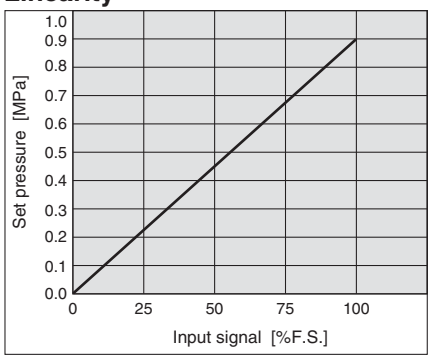

Hysteresis

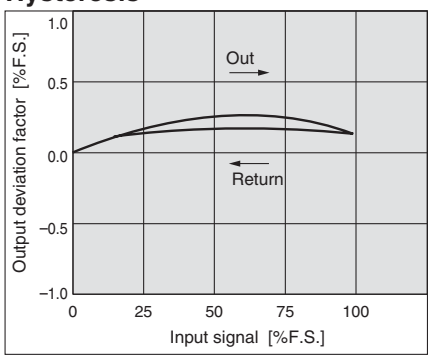

Repeatability

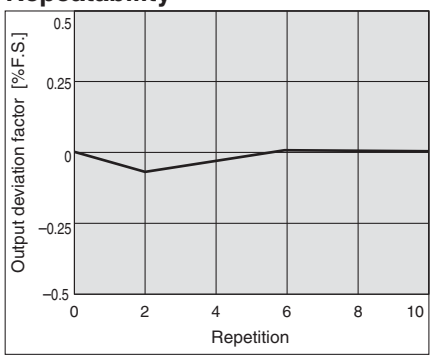

Pressure characteristics

Set pressure: 0.4 MPa

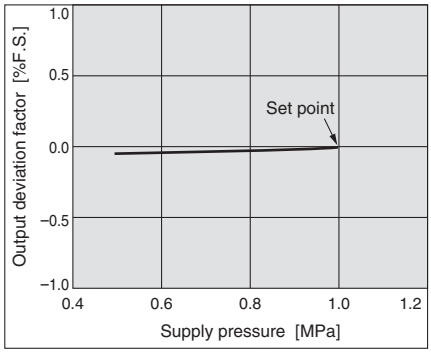

Flow characteristics

Supply pressure: 1.0 MPa

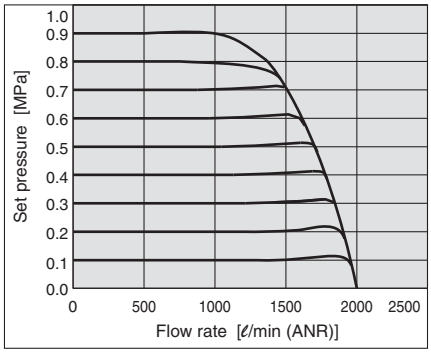

Relief flow characteristics

Supply pressure: 1.0 MPa

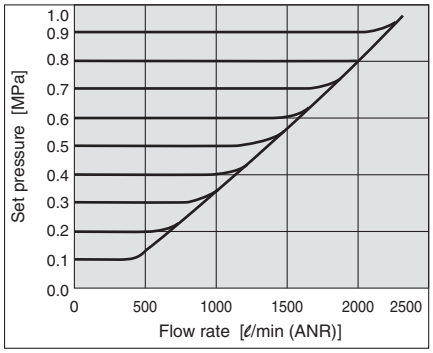

Series ITV305□

Linearity

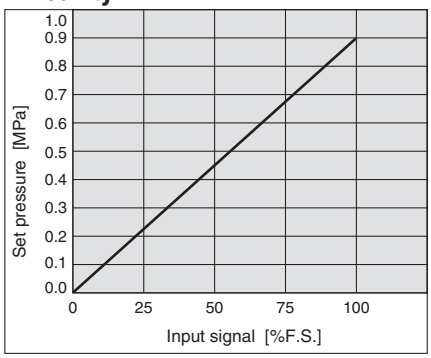

Hysteresis

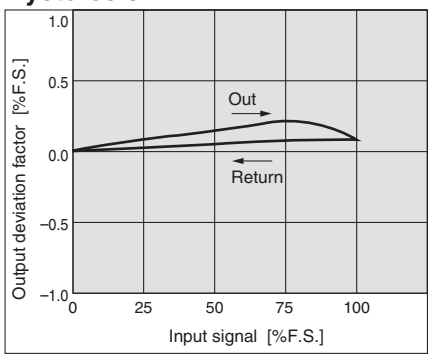

Repeatability

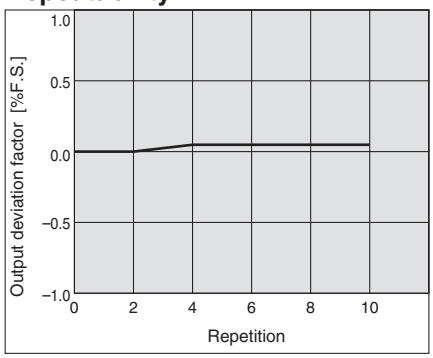

Pressure characteristics

Set pressure: 0.4 MPa

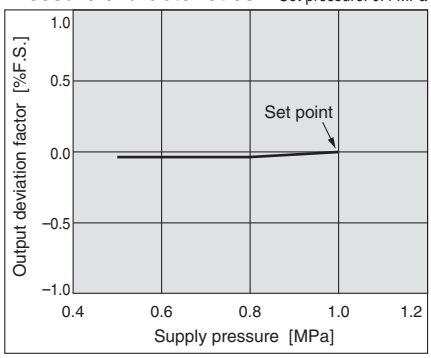

Flow characteristics

Supply pressure: 1.0 MPa

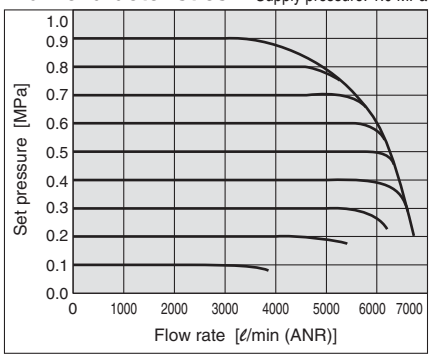

Relief flow characteristics

Supply pressure: 1.0 MPa

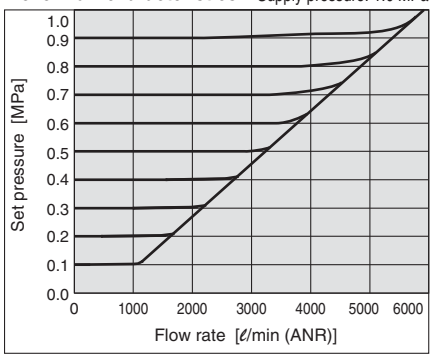

Dimensions

ITV10□□

Flat bracket

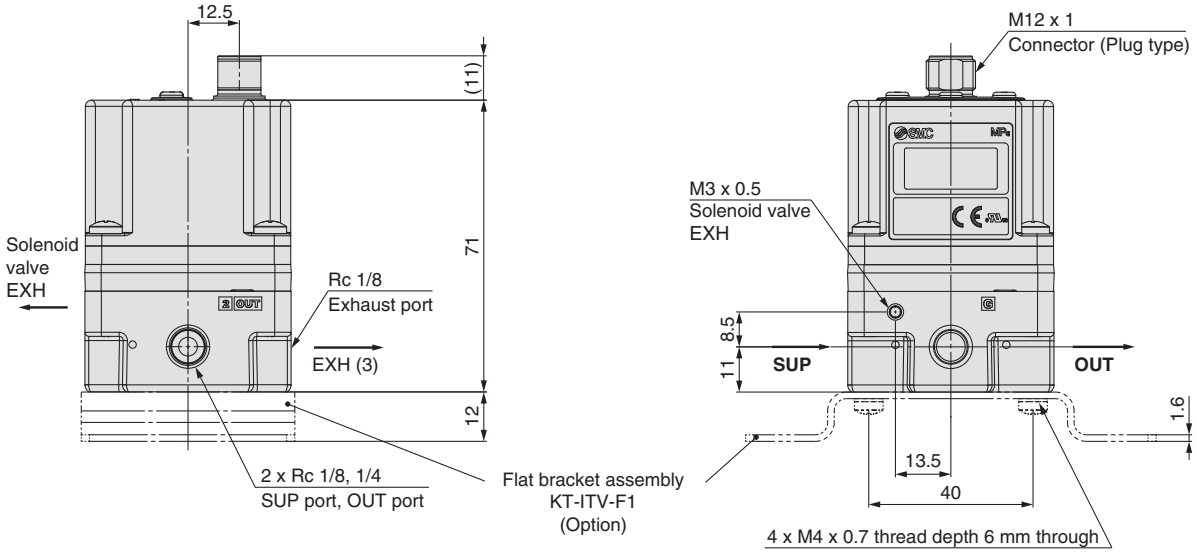

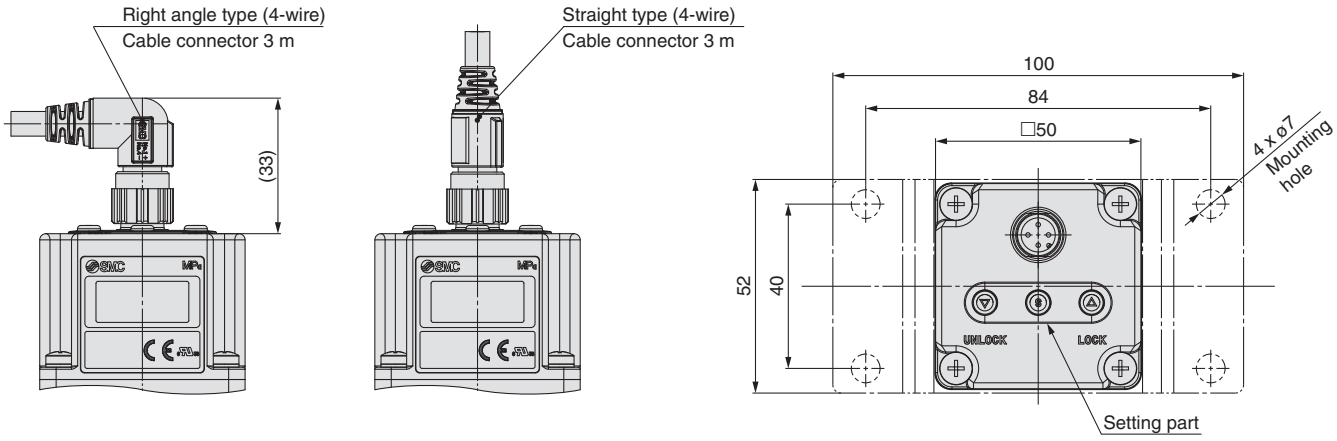

Note) Do not attempt to rotate, as the cable connector does not turn.

L-bracket

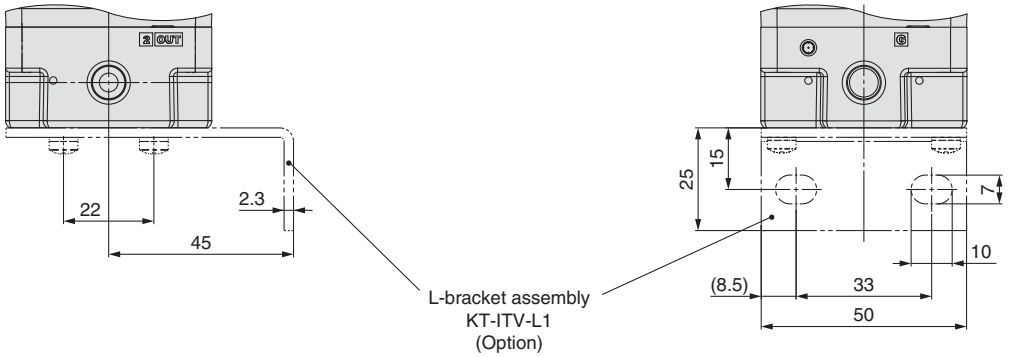

Dimensions (CC-Link, DeviceNet™, PROFIBUS DP and RS-232C)

CC-Link/ITV10□0-CC

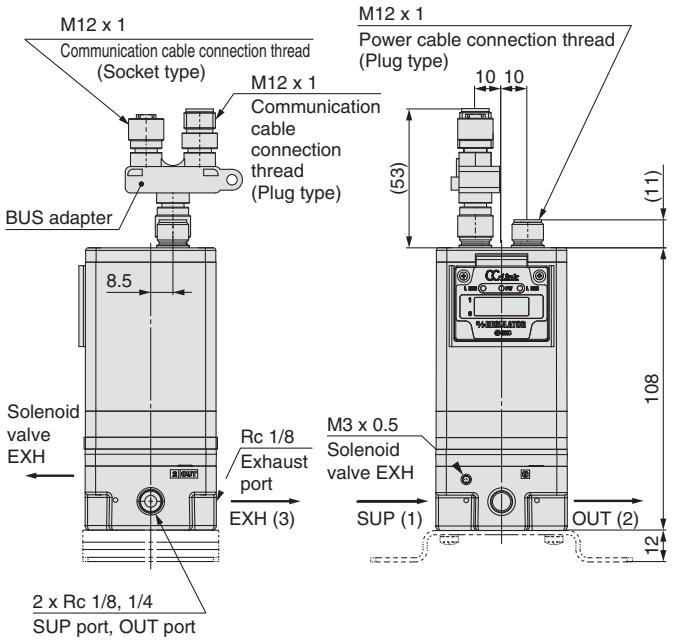

∗ Dimensions not shown are as on page 19.

DeviceNet™/ITV10□0-DE

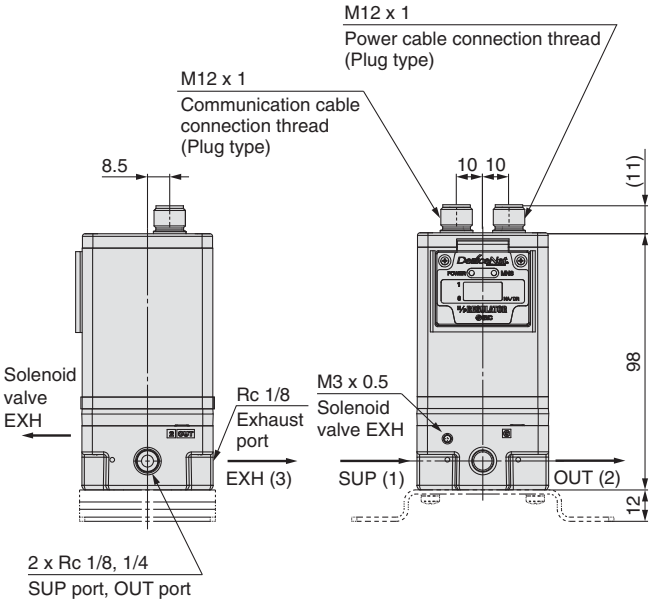

∗ Dimensions not shown are as on page 19.

PROFIBUS DP/ITV10□0-PR

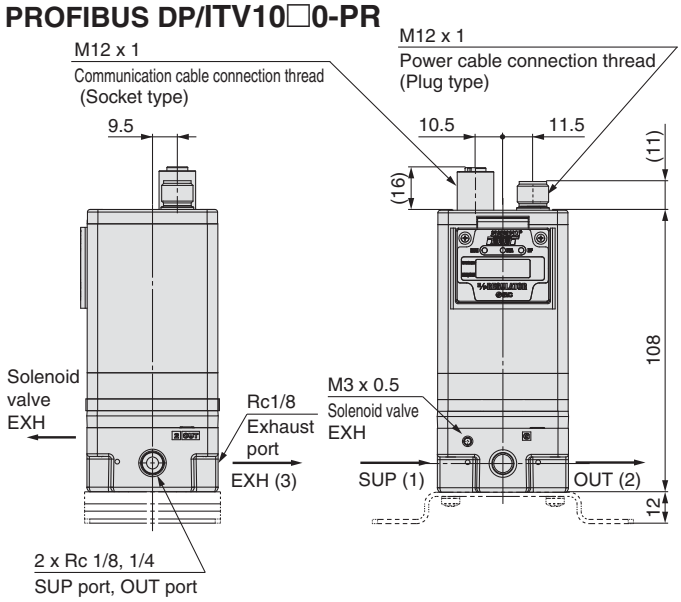

∗ Dimensions not shown are as on page 19.

RS-232C/ITV10□0-RC

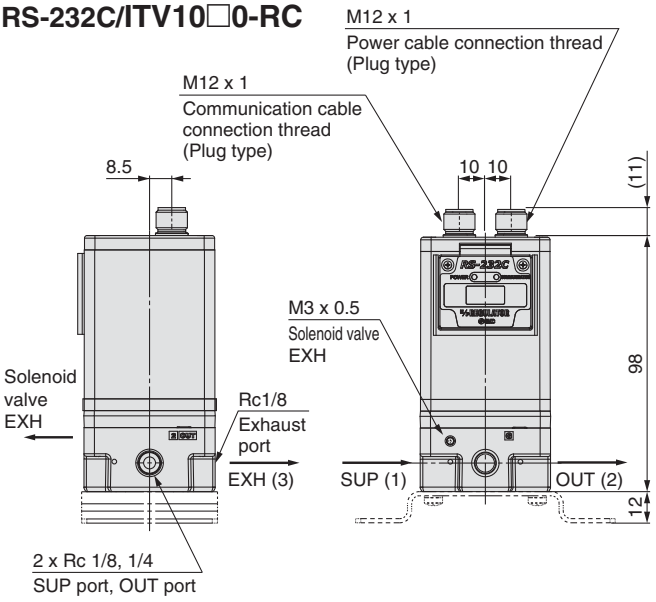

∗ Dimensions not shown are as on page 19.

With power cable connector ∗ ITV10□0-**52 53 CC DE PR RC** common dimensions

Note) Order communication cable (other than RS-232C) separately. (Refer to page 9.)

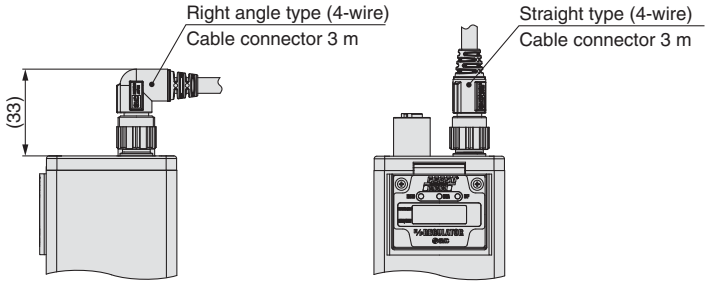

Note) Do not attempt to rotate, as the cable connector does not turn.

Dimensions

ITV20□□

Flat bracket

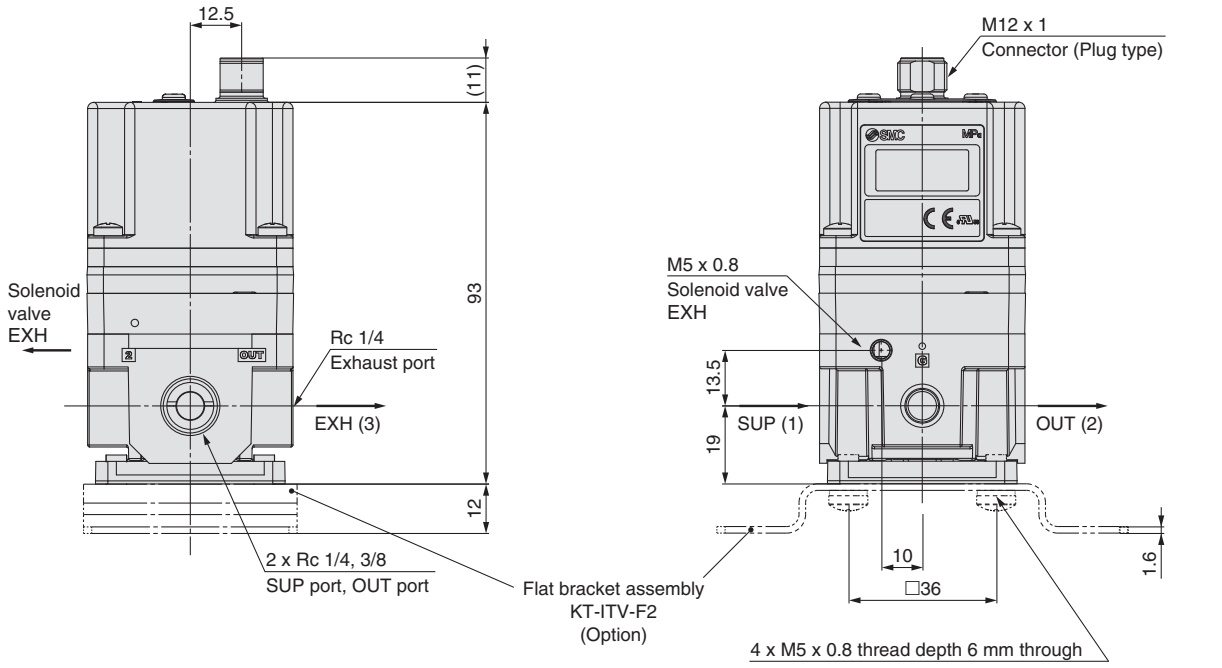

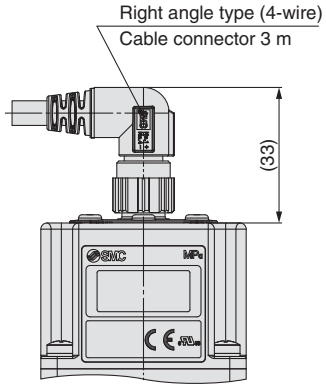

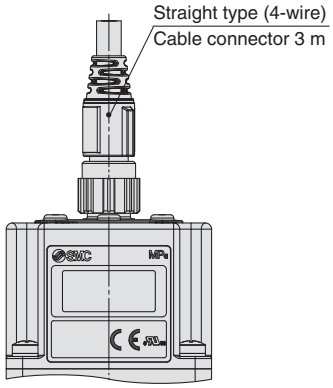

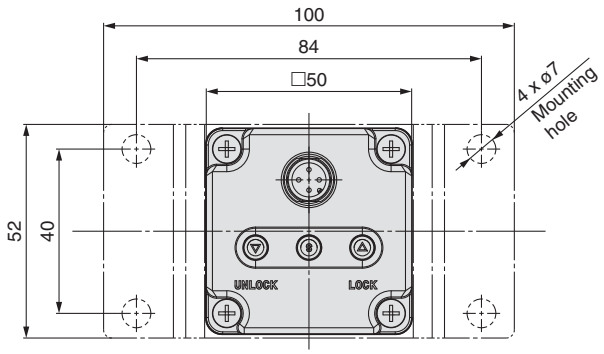

Note) Do not attempt to rotate, as the cable connector does not turn.

L-bracket

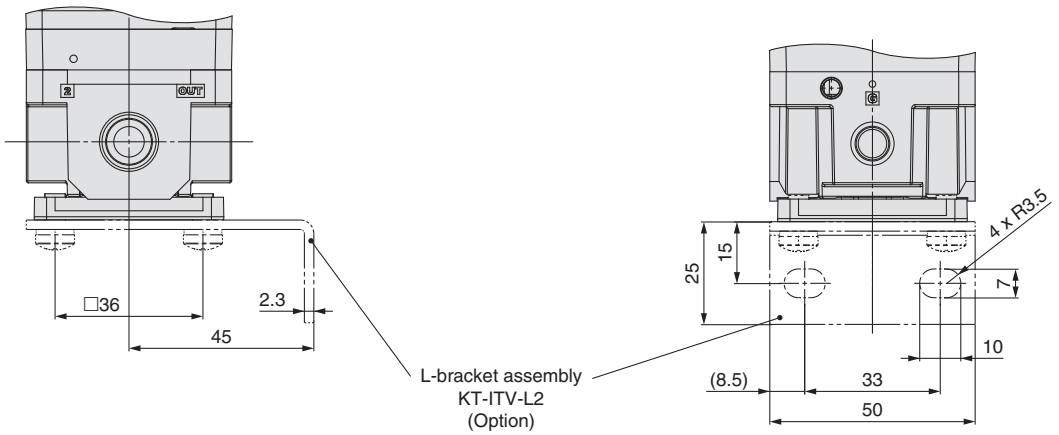

Dimensions (CC-Link, DeviceNet™, PROFIBUS DP and RS-232C)

CC-Link/ITV20□0-CC

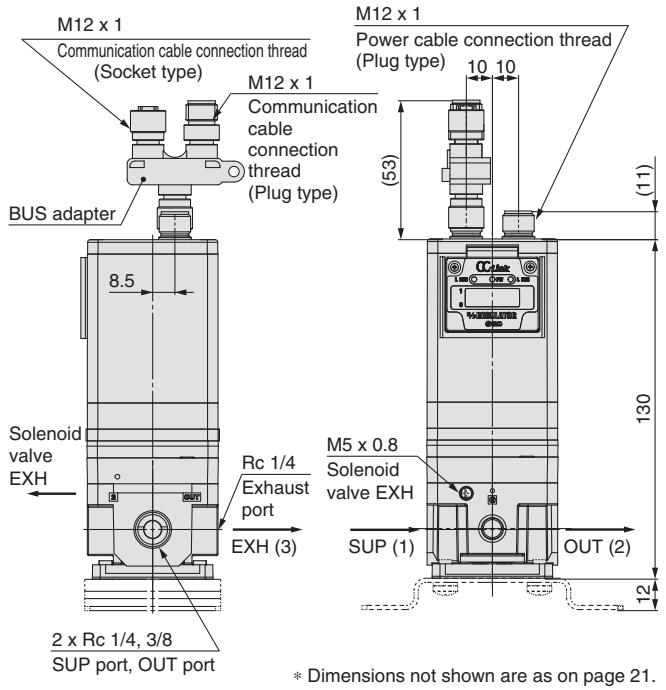

∗ Dimensions not shown are as on page 21.

DeviceNet™/ITV20□0-DE

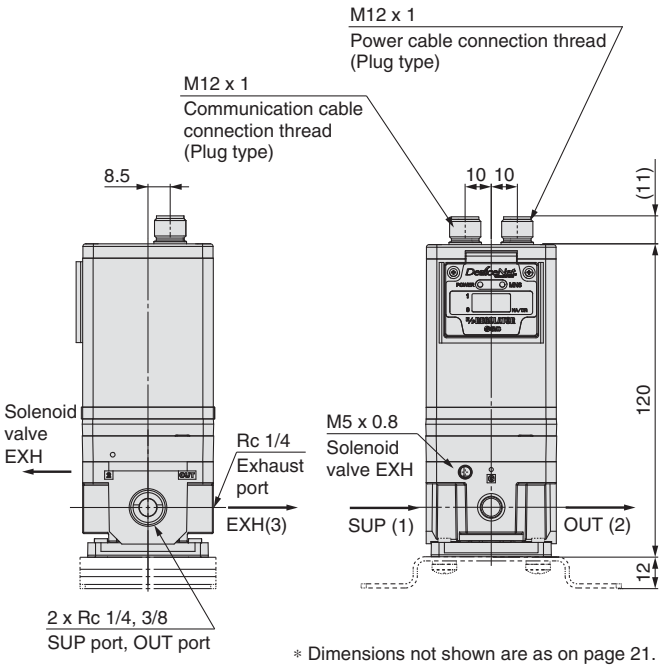

∗ Dimensions not shown are as on page 21.

PROFIBUS DP/ITV20□0-PR

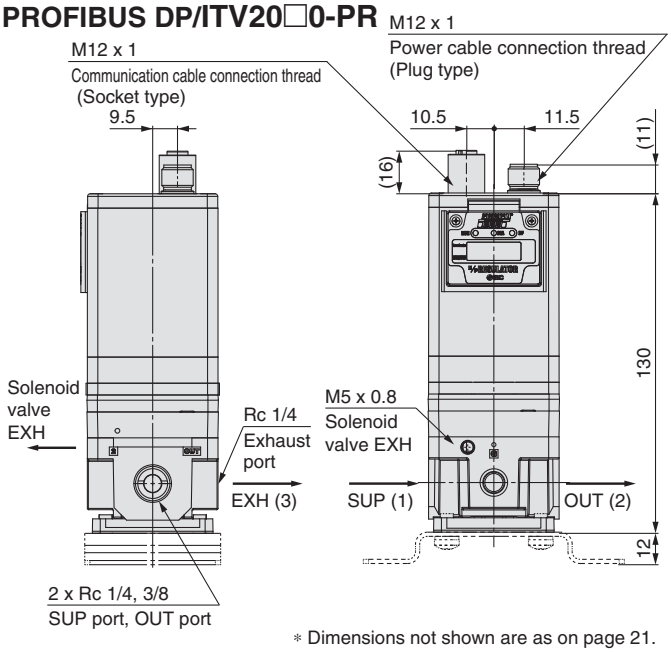

∗ Dimensions not shown are as on page 21.

RS-232C/ITV20□0-RC

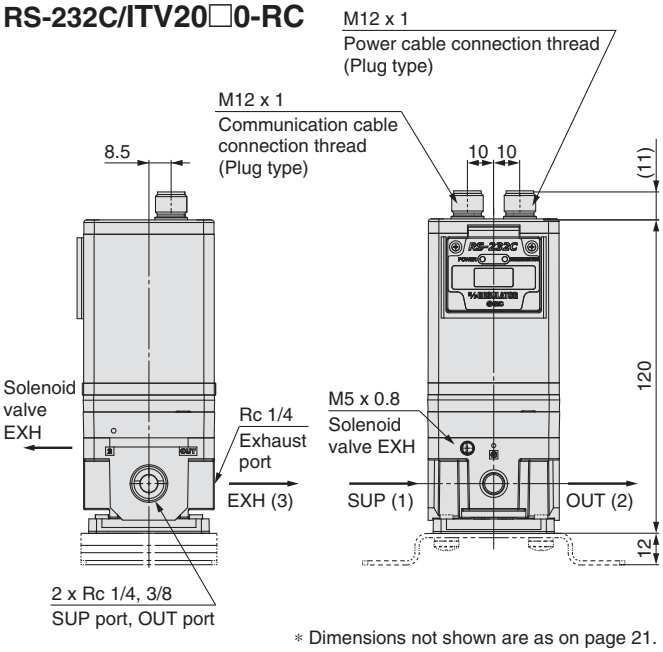

∗ Dimensions not shown are as on page 21.

With power cable connector ∗ ITV20□0-52 53 CC DE PR RC common dimensions

Note) Order communication cable (other than RS-232C) separately. (Refer to page 9.)

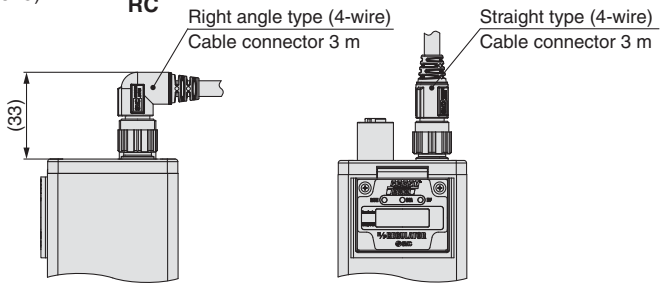

Note) Do not attempt to rotate, as the cable connector does not turn.

Dimensions

ITV30□□

Flat bracket

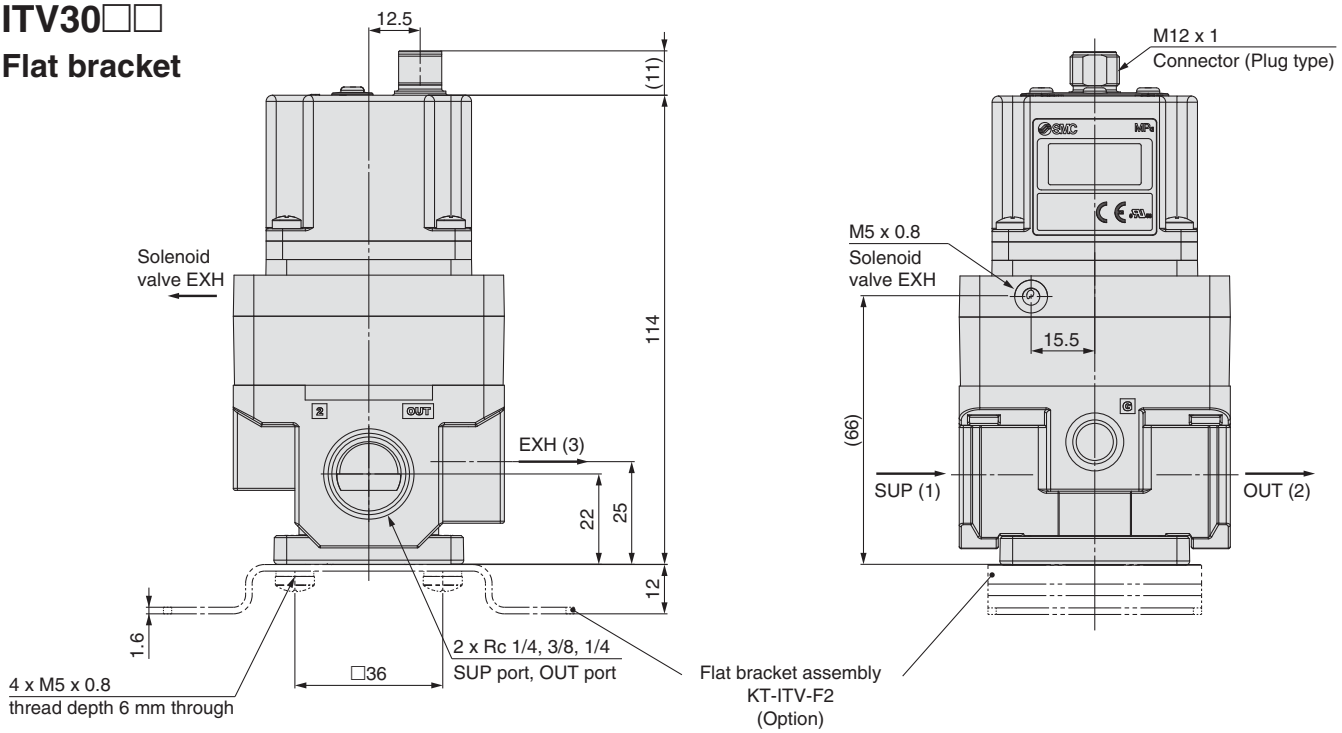

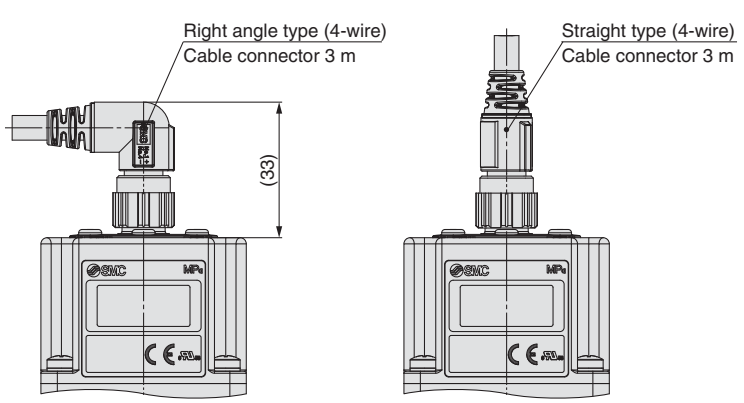

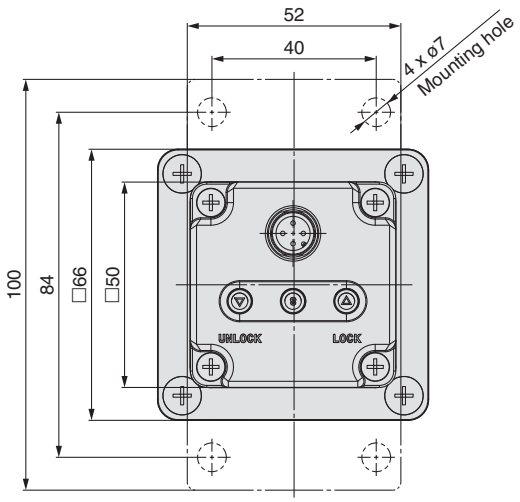

Note) Do not attempt to rotate, as the cable connector does not turn.

L-bracket

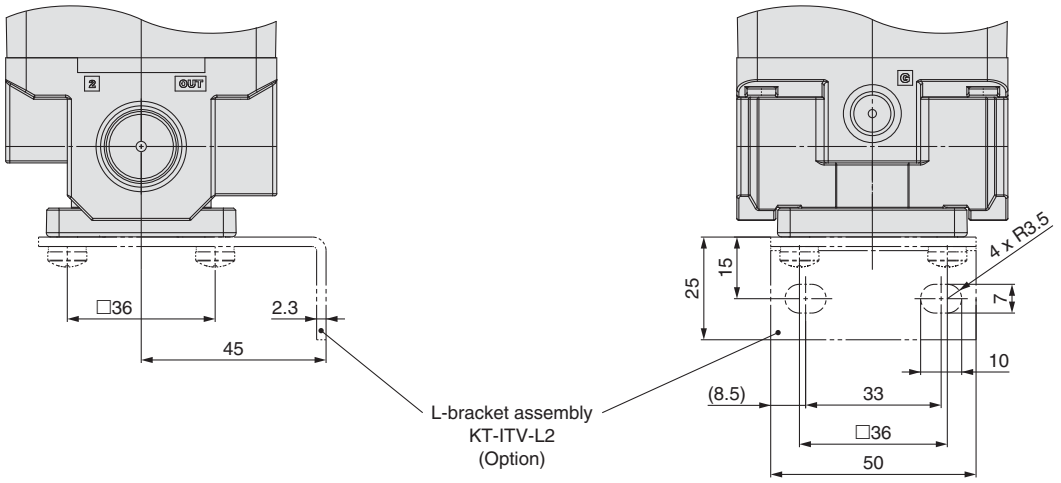

Dimensions (CC-Link, DeviceNet™, PROFIBUS DP and RS-232C)

CC-Link/ITV30□-CC

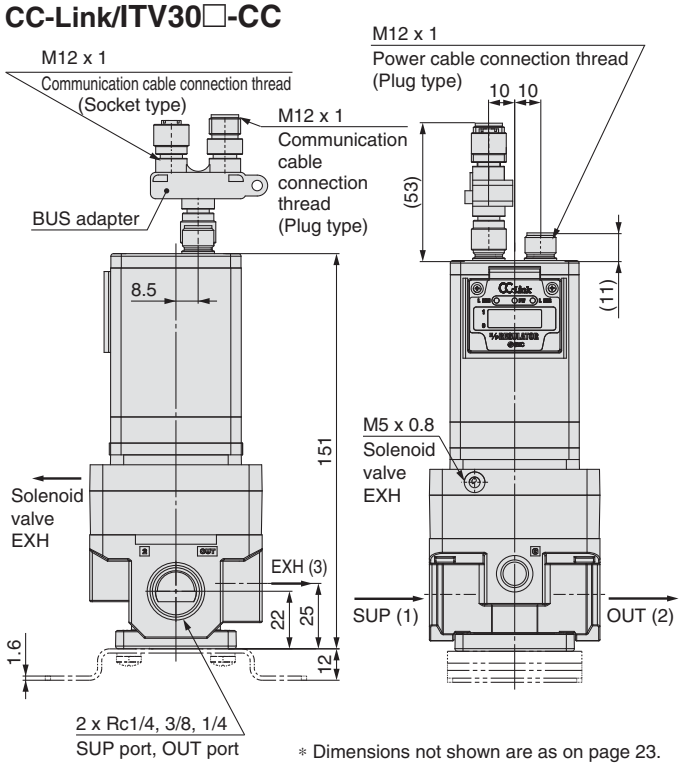

∗ Dimensions not shown are as on page 23.

DeviceNet™/ITV30□-DE

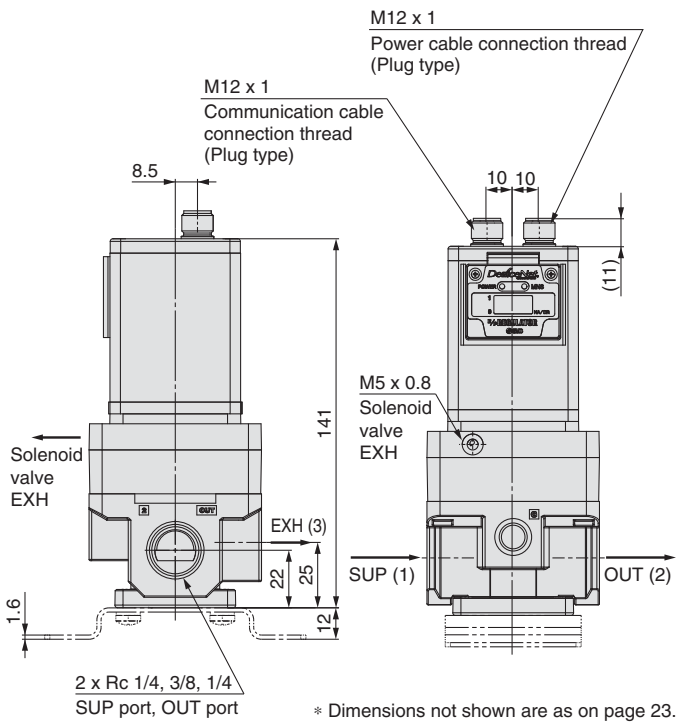

∗ Dimensions not shown are as on page 23.

PROFIBUS DP/ITV30□-PR

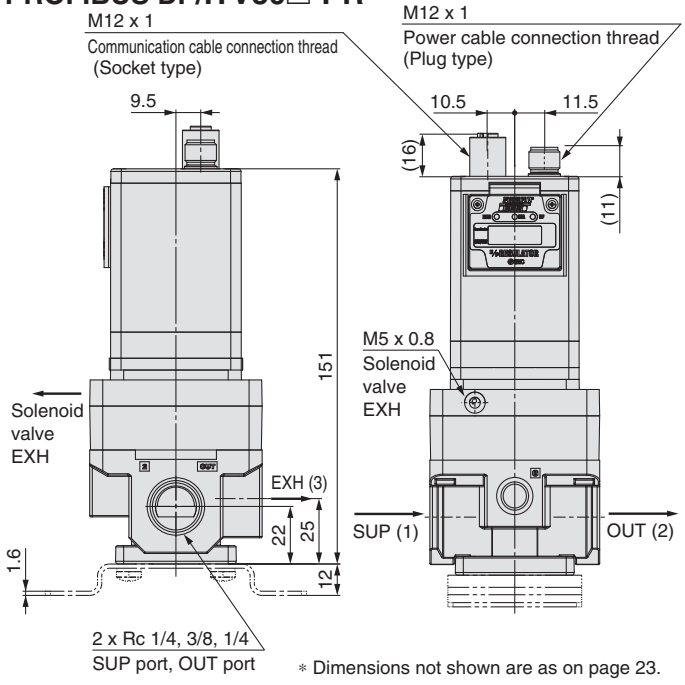

∗ Dimensions not shown are as on page 23.

RS-232C/ITV30□-RC

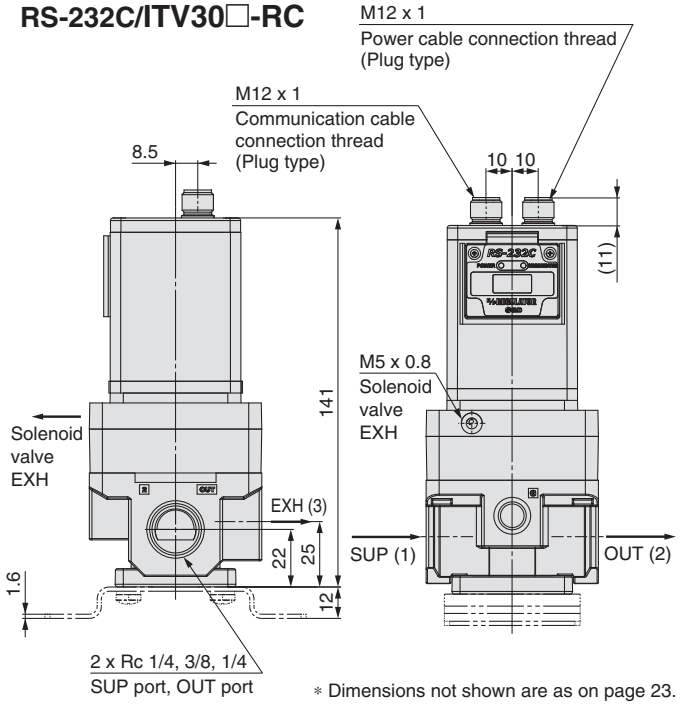

∗ Dimensions not shown are as on page 23.

With power cable connector

∗ ITV30□-
52
53
CC
DE
PR
RC

common dimensions

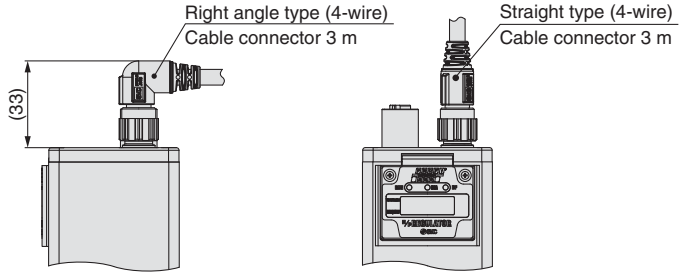

Note) Do not attempt to rotate, as the cable connector does not turn.

Made to Order Specifications 1

Please contact SMC for detailed dimensions, specifications and lead times.

1 Monitor Analogue output 4-20mA (source type/-COM)

ITV20□□–□4□□□□□–X256

Note 1) □ in part number is the same model no. for the standard products.

2 Digital Input Type

Parallel input type with digital 10 bit.

ITV10□0–40□□□□SN□–X157
ITV20□0–40□□□□SN□–X157
ITV30□0–40□□□□SN□–X157

Digital input type

Note 1) □ in part number is the same model no. for the standard products.
Note 2) Right angle type cable connectors cannot be selected.

3 Reverse Type

In compliance with input, inverse proportional pressure is displayed.

ITV10□□–□□□□□□□–X102
ITV20□□–□□□□□□□–X102
ITV30□□–□□□□□□□–X102

Reverse type

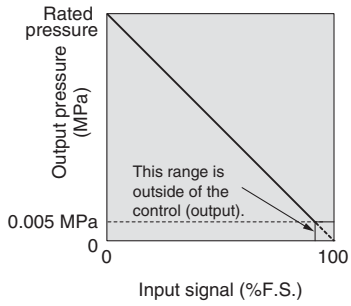

Input/output characteristics chart

Note 1) □ in part number is the same model no. for the standard products.
Note 2) Except for preset input type.

4 High Pressure Type (SUP 1.2 MPa, OUT 1.0 MPa)

ITV10 5□–□□□□□□□–X224
ITV20 5□–□□□□□□□–X224
ITV30 5□–□□□□□□□–X224

High pressure type (SUP 1.2 MPa, OUT 1.0 MPa)

5 Set Pressure Range 1 to 100 kPa

ITV10 1□–□□□□□□□–X25
ITV20 1□–□□□□□□□–X25

Set pressure range 1 to 100 kPa

Made to Order Specifications 2

Made to Order

Please contact SMC for detailed dimensions, specifications and lead times.

6 Linearity: ±0.5% F.S. or less

ITV 3 0 1 0 – 0 1 □ 2 □ S □ – X410

Model

1	1000 type
2	2000 type
3	3000 type

Pressure range

1	0.1 MPa
3	0.5 MPa
5	0.9 MPa

Power supply voltage

0	24 VDC
1	12 to 15 VDC

Input signal

0	Current type 4 to 20 mA DC (Sink type)
1	Current type 0 to 20 mA DC (Sink type)
2	Voltage type 0 to 5 VDC
3	Voltage type 0 to 10 VDC

Monitor output

1	Analogue output 1 to 5 VDC
2	Switch output/NPN output
3	Switch output/PNP output
4	Analogue output 4 to 20 mA DC (Sink type)

Thread type

—	Rc
N	NPT
T	NPTF
F	G

Port size

1	1/8 (1000 type)
2	1/4 (1000, 2000, 3000 type)
3	3/8 (2000, 3000 type)
4	1/2 (3000 type)

Bracket

—	Without bracket
B	Flat bracket
C	L-bracket

Cable connector type

S	Straight type 3 m
L	Right angle type 3 m
N	Without cable connector

Pressure display unit

—	MPa
2	kgf/cm²
3	bar
4	psi
5	kPa

Linearity: ±0.5% F.S. or less

7 With Alarm Output

Alarm is output if the set pressure is not reached or maintained for 5 seconds or more.

ITV 3 0 1 0 – 0 1 □ 2 □ S □ – X420

Model

1	1000 type
2	2000 type
3	3000 type

Pressure range

1	0.1 MPa
3	0.5 MPa
5	0.9 MPa

Power supply voltage

0	24 VDC
1	12 to 15 VDC

Input signal

0	Current type 4 to 20 mA DC (Sink type)
1	Current type 0 to 20 mA DC (Sink type)
2	Voltage type 0 to 5 VDC
3	Voltage type 0 to 10 VDC

Monitor output

2	Alarm output/NPN output
3	Alarm output/PNP output

Thread type

—	Rc
N	NPT
T	NPTF
F	G

Port size

1	1/8 (1000 type)
2	1/4 (1000, 2000, 3000 type)
3	3/8 (2000, 3000 type)
4	1/2 (3000 type)

Bracket

—	Without bracket
B	Flat bracket
C	L-bracket

Cable connector type

S	Straight type 3 m
L	Right angle type 3 m
N	Without cable connector

Pressure display unit

—	MPa
2	kgf/cm²
3	bar
4	psi
5	kPa

With alarm output

Series ITV1000/2000/3000
Made to Order Specifications 3

Please contact SMC for detailed dimensions, specifications and lead times.

Made to Order

8 High-Speed Response Time Type

Pressure response with no load is approx. 0.1 sec.

ITV 2 0 1 0 – 0 1 □ 2 □ S □ – X88

Model

1	1000 type
2	2000 type

Pressure range

1	0.1 MPa
3	0.5 MPa
5	0.9 MPa

Power supply voltage

0	24 VDC
1	12 to 15 VDC

Input signal

0	Current type 4 to 20 mA DC (Sink type)
1	Current type 0 to 20 mA DC (Sink type)
2	Voltage type 0 to 5 VDC
3	Voltage type 0 to 10 VDC

Monitor output

1	Analogue output 1 to 5 VDC

Thread type

—	Rc
N	NPT
T	NPTF
F	G

Port size

1	1/8 (1000 type)
2	1/4 (1000, 2000 type)
3	3/8 (2000 type)

Bracket

—	Without bracket
B	Flat bracket
C	L-bracket

Cable connector type

S	Straight type 3 m
L	Right angle type 3 m
N	Without cable connector

Pressure display unit

—	MPa
2 *	kgf/cm²
3	bar
4 *	psi
5	kPa

* Under Japan's new Measurement Act, this is only for overseas sales (SI units are to be used inside Japan).

High-speed response time specifications

Symbol	CE-compliant
X88	Not compliant
X154	Compliant

9 Manifold Specifications (Except Series ITV3000)

2 through 8 station manifold.

How to Order Manifolds

IITV20 – □ 02 – 5

Stations

2	2 stations
⋮	⋮
8	8 stations

ITV1000, 2000

OUT port size

02	1/4
03	3/8

Connection thread type

—	PT
N	NPT
F	PF

IITV20-02-3 .....1 set (3 station manifold base part no.)
*ITV1030-311S-X26 .....1 set (Electro-pneumatic regulator part no.) Note 2)
*P398020-13 .....1 set (Blanking plate assembly part no.)
*ITV2050-212S-X26 .....1 set (Electro-pneumatic regulator part no.) Note 2)

The * is the symbol for mounting. Add the * symbol at the beginning of part numbers for electro-pneumatic regulators, etc. to be mounted on the base.

Note) Refer to the table below for possible mixed combination.

Model	ITV101□	ITV103□	ITV105□	ITV201□	ITV203□	ITV205□
ITV101□	●	—	—	●	—	—
ITV103□	—	●	●	—	●	●
ITV105□	—	●	●	—	●	●
ITV201□	●	—	—	●	—	—
ITV203□	—	●	●	—	●	●
ITV205□	—	●	●	—	●	●

How to Order Manifold Assemblies

Example

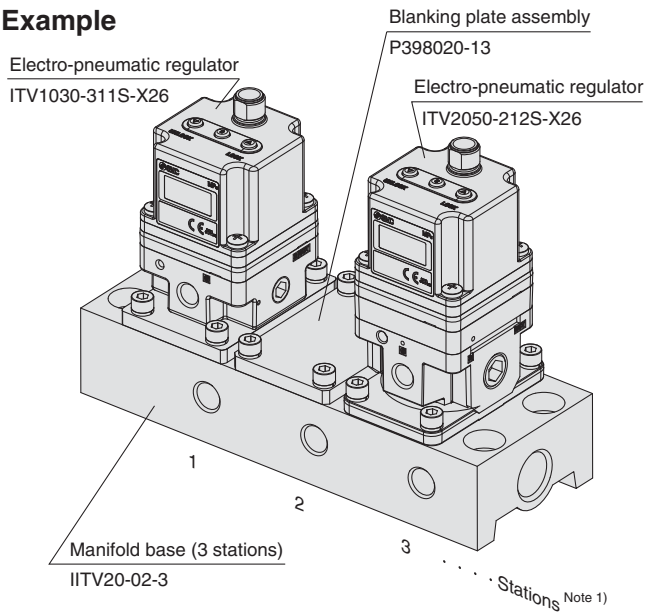

Note 1) Electro-pneumatic regulators are counted starting from station 1 on the left side with the OUT ports in front.
Note 2) The port size for mounted electro-pneumatic regulators is Rc 1/8 (ITV1000), Rc 1/4 (ITV2000) only.
Note 3) When there is a large number of stations, use piping with the largest possible inside diameter for the supply side, such as steel piping.
Note 4) The use of the straight type cable connector is recommended. To mount right angle type, be certain to check that no possible interference occurs.
Note 5) When mounting a blanking plate and the regulator with different pressure set, please inform SMC of the order of a manifold station beside a purchase order.

Compact Vacuum Regulator

Series ITV009□

How to Order

For single unit and single unit for manifold

ITV00 9 0 – 3 □ □ □ N

Pressure range

9	–100 kPa

Power supply voltage

0	24 VDC ±10%
1	12 to 15 VDC

Input signal

0	Current type 4 to 20 mA DC
1	Current type 0 to 20 mA DC
2	Voltage type 0 to 5 VDC
3	Voltage type 0 to 10 VDC

Built-in One-touch fittings type

For single unit

Symbol		VAC 1	OUT 2	ATM 3
—	Metric size (Light grey)	ø4		
U	Inch size (Orange)	ø5/32"		

For manifold

Symbol		VAC 1	OUT 2	ATM 3
—	Metric size (Light grey)	ø6	ø4	ø6
U	Inch size (Orange)	ø1/4"	ø5/32"	ø1/4"

Cable connector (Option)

N	Without cable connector
S	Straight type 3 m
L	Right angle type 2 m

Bracket/Option for single unit only

—	Without bracket
B	Flat Bracket 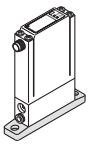
C	L-bracket 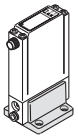

Base type

—	For single unit
M	For manifolds

Manifold

IITV00 – 02 – n

Stations

02	2 stations
03	3 stations
⋮	⋮
10	10 stations

Option

If a DIN rail longer than the specified stations is required, specify the applicable stations in two digits.
(Maximum 10 stations)
Example) **IITV00-05-07**

Note) A DIN rail with the length specified by the number of stations is attached to the manifold. For dimensions of the DIN rail, refer to the external dimensions.

How to Order Manifold Assembly (Example)

Indicate the part numbers of electro-pneumatic regulators and options to be mounted below the manifold part number.

Example)
Due to the common supply/exhaust feature, note that different pressure range combinations are not available.

IITV00-03·····1 set (Manifold part no.)
∗ITV0090-3MS·····2 sets (Vacuum regulator part no. (1, 2 stations))
∗ITV0090-3ML·····1 set (Vacuum regulator part no. (3 stations))

Indicate part numbers in order starting from the first station on the D side.

Note) Combination with having different pressure ranges is not available due to common supply/exhaust features.

The asterisk (∗) specifies mounting. Add an asterisk (∗) at the beginning of electro-pneumatic regulator part numbers to be mounted.

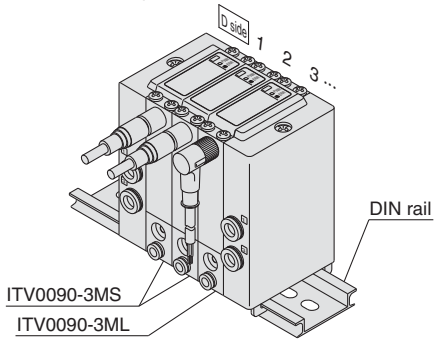

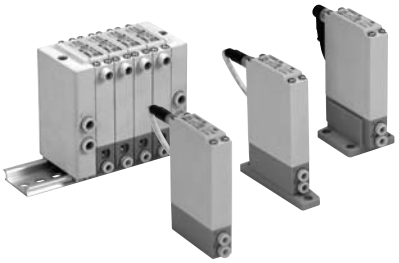

Specifications

Model		ITV009□	
Minimum supply pressure		Set pressure –1 kPa	
Maximum supply pressure		–101 kPa	
Set pressure range		–1 to –100 kPa	
Maximum flow rate		2 ℓ/min (ANR) (Supply pressure: –101 kPa)	
Power supply	**Voltage**	24 VDC ±10%, 12 to 15 VDC	
	Current consumption	Power supply voltage 24 VDC type: 0.12 A or less Power supply voltage 12 to 15 VDC type: 0.18 A or less	
Input signal	**Voltage type**	0 to 5 VDC, 0 to 10 VDC	
	Current type	4 to 20 mA DC, 0 to 20 mA DC	
Input impedance	**Voltage type**	Approximately 10 kΩ	
	Current type	Approximately 250 Ω	
Output signal	**Analogue output**	1 to 5 VDC (Output impedance: Approximately 1 kΩ) Output accuracy: Within ±6% (Full span)	
Linearity		Within ±1% (Full span)	
Hysteresis		Within 0.5% (Full span)	
Repeatability		Within ±0.5% (Full span)	
Sensitivity		Within 0.2% (Full span)	
Temperature characteristics		Within ±0.12% (Full span)/°C	
Operating temperature range		0 to 50°C (No condensation)	
Enclosure		IP65 equivalent *	
Connection type		Built-in One-touch fittings	
Connection size	**For single unit**	Metric size	1, 2, 3: ø4
		Inch size	1, 2, 3: ø5/32"
	Manifold	Metric size	1, 3: ø6, 2: ø4
		Inch size	1, 3: ø1/4", 2: ø5/32"
Weight Note 1)		100 g or less (without option)	

Note 1) Indicates the weight of a single unit.
For IITV00-n
Total weight (g) Stations (n) x 100 + 130 (Weight of end block A, B assembly) + Weight (g) of DIN rail

Note 2) When there is a downstream flow consumption, pressure may become unstable depending on piping conditions.

* When using under the conditions equivalent to IP65, connect the fitting or tube to the breathing hole prior to use. (For details, refer to "Specific Product Precautions 1" on page 41)

Accessories (Option)

Bracket

Flat bracket assembly (including 2 mounting screws)
P39800022



L-bracket assembly (including 2 mounting screws)
P39800023



Tighting torque when assembling is 0.3 N·m.

Cable connector

Straight type
M8-4DSX3MG4



Right angle type
P398000-501-2



Working Principle

When the input signal rises, the air supply soloenoid valve ① turns ON. Due to this, part of the supply pressure passes through the air supply solenoid valve ① and changes to output pressure. This output pressure feeds back to the control circuit ④ via the pressure sensor ③. Here, pressure corrections continue until output pressure becomes proportional to the input signal, enabling output pressure that is proportional to the input signal.

Diagram of working principle

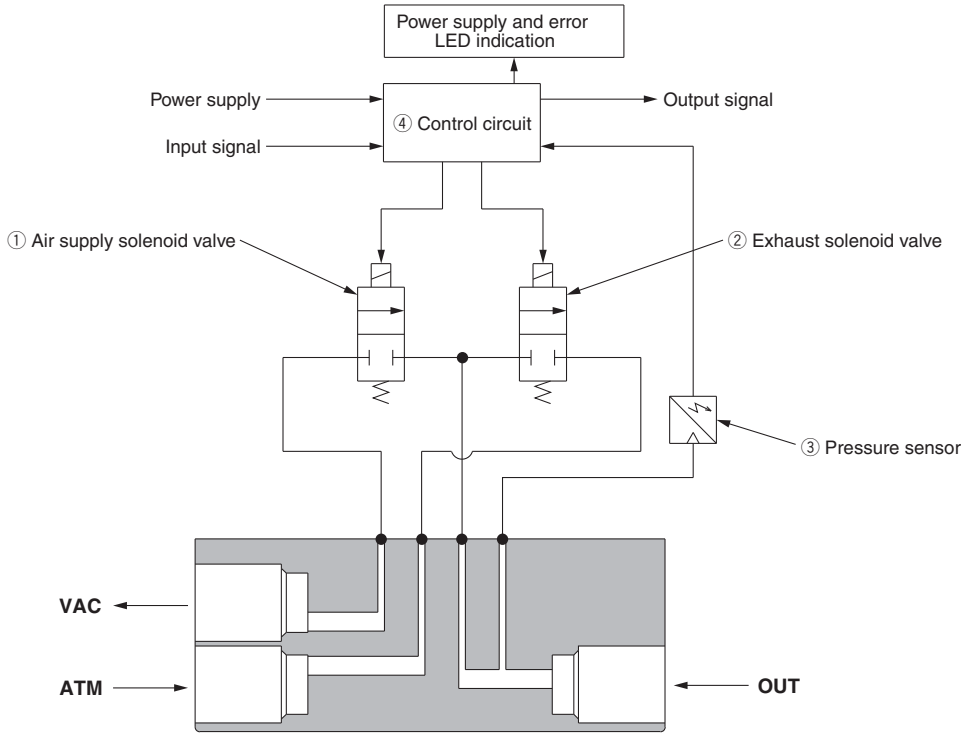

Block diagram

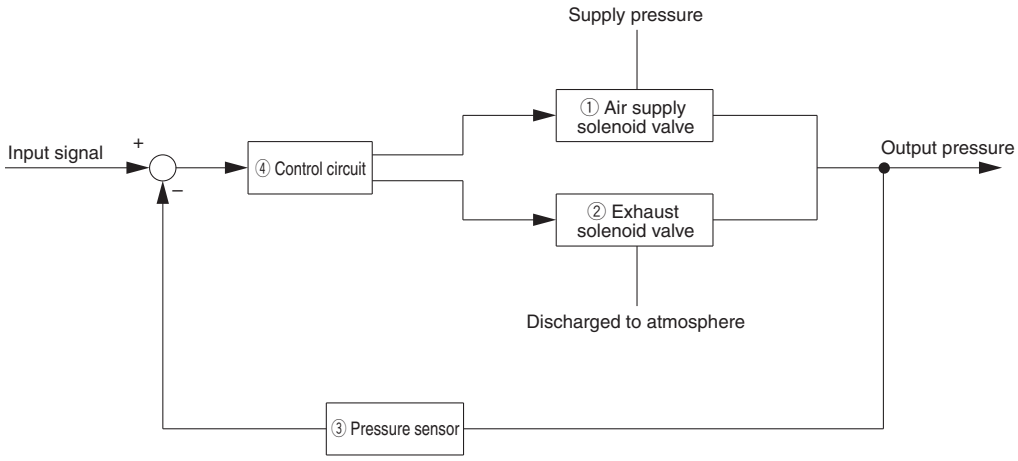

Series ITV009□

Linearity, Hyteresis

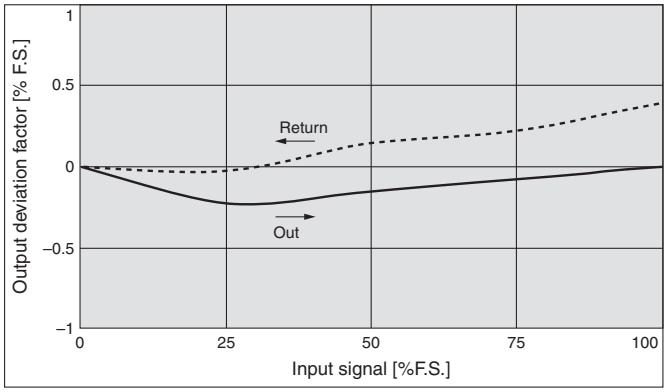

Repeatability

With 50% of signal input

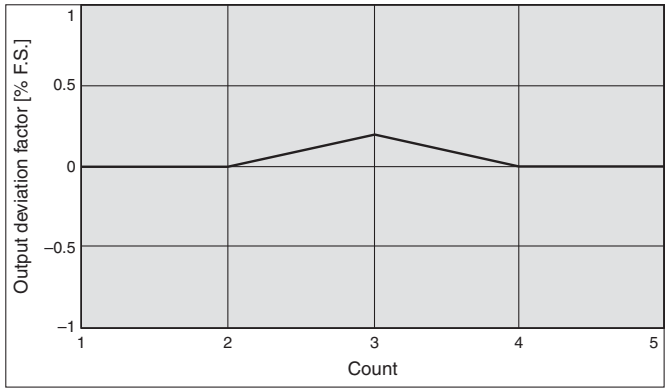

Pressure Characteristics

Set pressure: –10 kPa

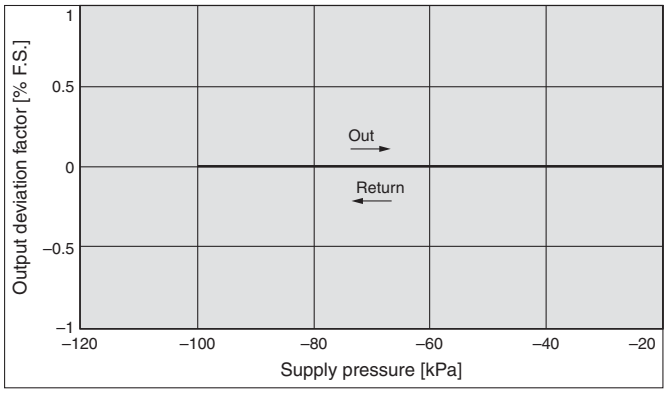

Flow Characteristics

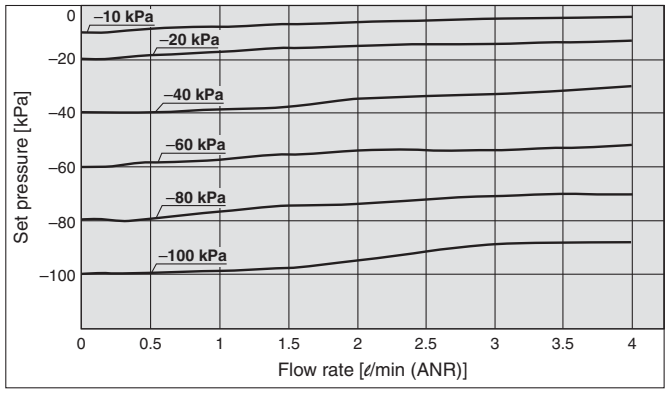

Dimensions

For Single Unit

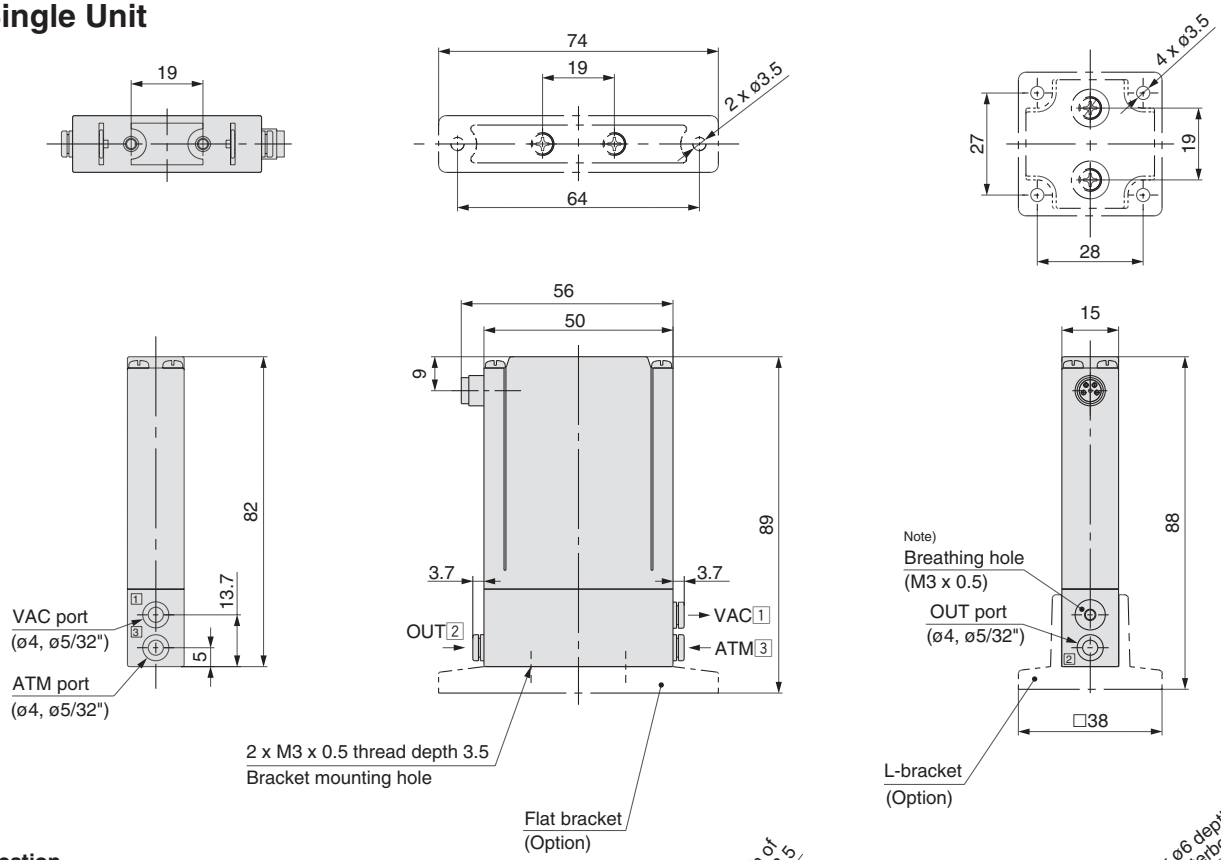

Port Location

No.	1	2	3
ITV009□	VAC	OUT	ATM

Note) When using under the conditions equivalent to IP65, connect the fittings or tube to the breathing hole prior to use. (For details, refer to "Specific Product Precautions 1" on page 41)

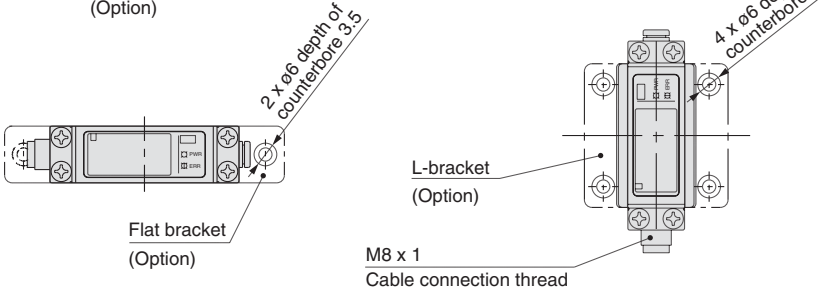



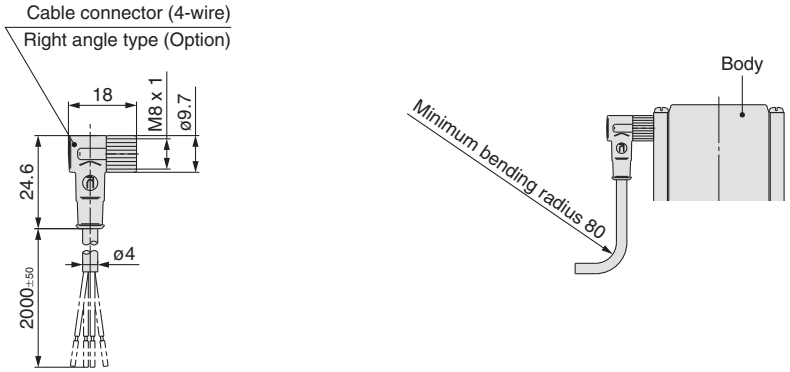

Dimensions

Single unit for manifold

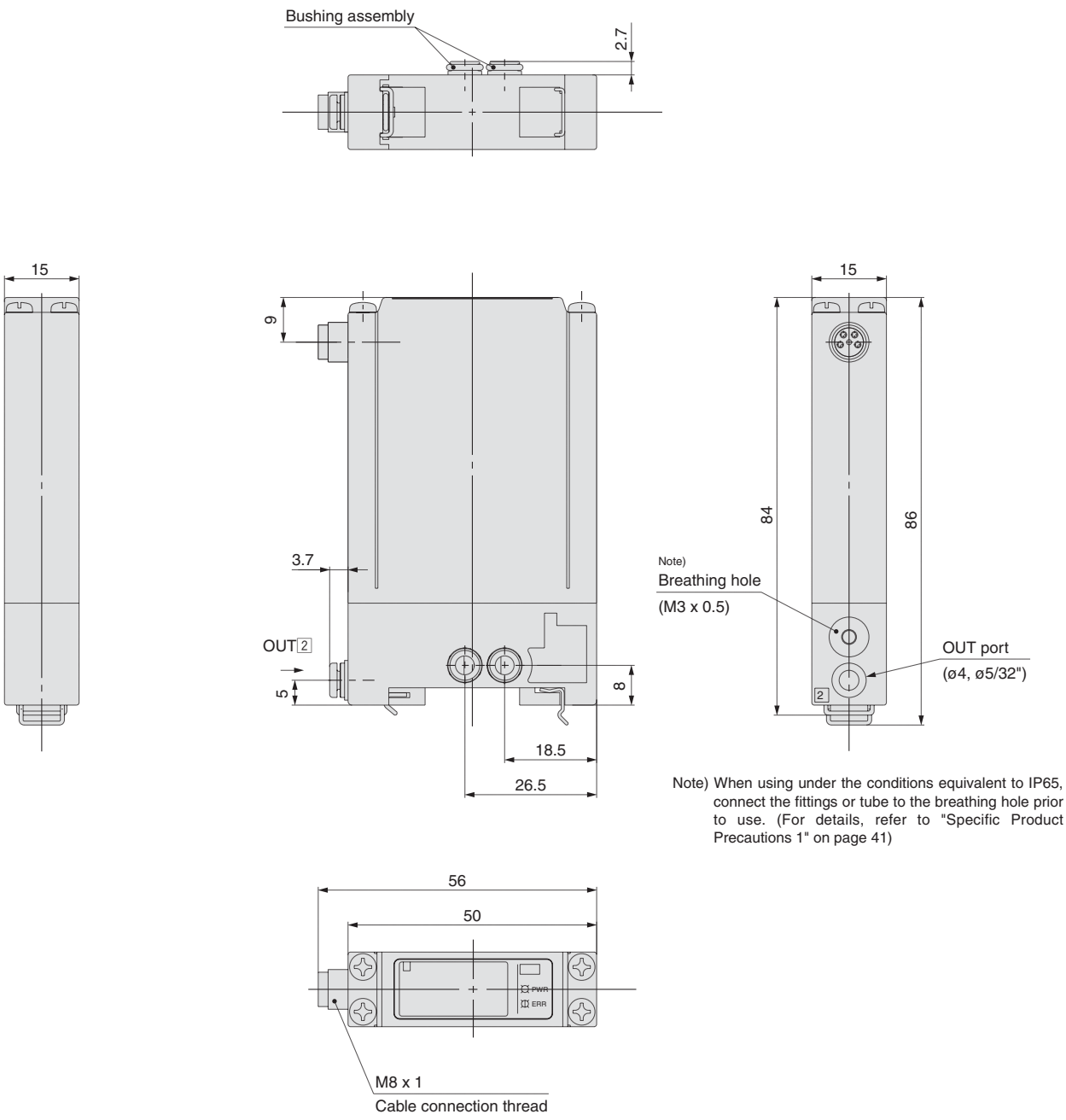

Note) When using under the conditions equivalent to IP65, connect the fittings or tube to the breathing hole prior to use. (For details, refer to "Specific Product Precautions 1" on page 41)

Note) For dimensions of the cable connector, refer to single unit on page 32.

Dimensions

Manifold

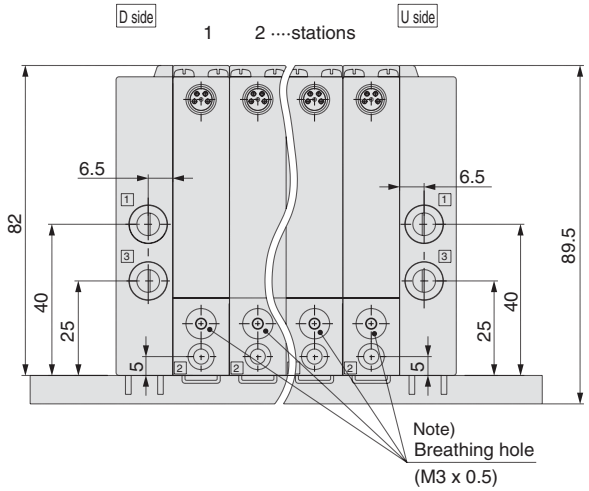

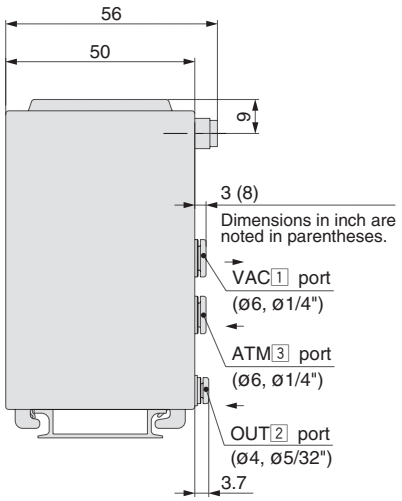

Note) When using under the conditions equivalent to IP65, connect the fittings or tubing to the breathing hole prior to use.
(For details, refer to "Specific Product Precautions 1" on page 41)

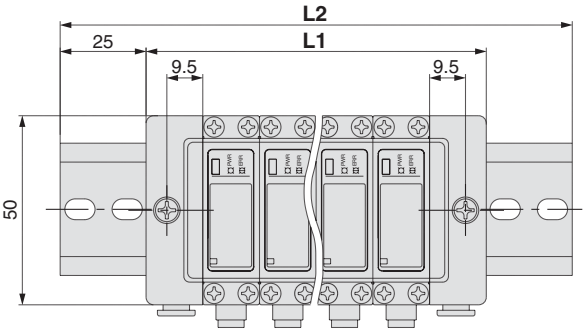

Port Location

No.	1	2	3
ITV009□	VAC	OUT	ATM

Note) Stations are counted starting from the D side.

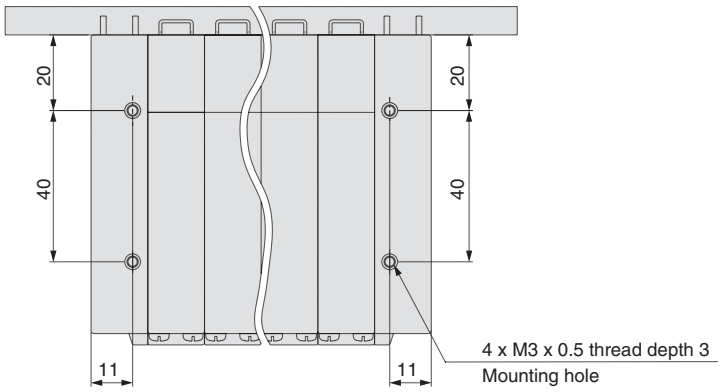

Note) For dimensions of the cable connector, refer to single unit on page 32.

[mm]

Manifold stations n	2	3	4	5	6	7	8	9	10
L1	60	75	90	105	120	135	150	165	180
L2	110.5	123	148	160.5	173	185.5	198	223	235.5
Weight of DIN rail [g]	20	22	27	29	31	34	36	41	43

Electronic Vacuum Regulator

Series ITV2090/2091

How to Order

ITV 209 0 – 0 1 F 2 □ S 5

Pressure range

9	–1.3 to –80 kPa

Power supply voltage

0	24 VDC
1	12 to 15 VDC

Note) Communication models are available only for 24 V DC.

Input signal/ Communication model

0	Current type 4 to 20 mA DC (Sink type)
1	Current type 0 to 20 mA DC (Sink type)
2	Voltage type 0 to 5 VDC
3	Voltage type 0 to 10 VDC
40	4 points preset input
52	16 points preset input (Switch output/NPN output)
53	16 points preset input (Switch output/PNP output)
60	10 bit digital input
CC	CC-Link
DE	DeviceNet™
PR	PROFIBUS DP
RC	RS-232C communication

Monitor output

1	Analogue output 1 to 5 VDC
2	Switch output/NPN output
3	Switch output/PNP output
4	Analogue output 4 to 20 mA DC (Sink type)
—	None

Thread type

—	Rc
N	NPT
T	NPTF
F	G

Port size

2	1/4

Bracket

—	Without bracket
B	Flat bracket
C	L-bracket

Cable connector type

S	Straight type 3 m
L	Right angle type 3 m
N	Without cable connector

Note) Order communication cable (other than RS-232C) separately. See below.

Pressure display unit

5	kPa

Note) For the communication models, CC, DE, PR and RC, only "—" is available as it does not have a pressure display.

For communications cables, use the parts listed below
(refer to the catalogue [M8/M12 Connector] CAT.ES100-73 for details)
or order the product certified for the respective protocol (with M12 connector) separately.

Application	Communication cable part number	Remarks
CC-Link compatibility	PCA-1567720 (Socket type)	Dedicated Bus adapter supplied with the product.
	PCA-1567717 (Plug type)	
DeviceNet™ compatibility	PCA-1557633 (Socket type)	T-branch connector not supplied.
	PCA-1557646 (Plug type)	
PROFIBUS DP compatibility	PCA-1557688 (Socket type)	T-branch connector not supplied.
	PCA-1557691 (Plug type)	

Stepless control of vacuum pressure in proportion to an electrical signal



Piping/Wiring Diagram

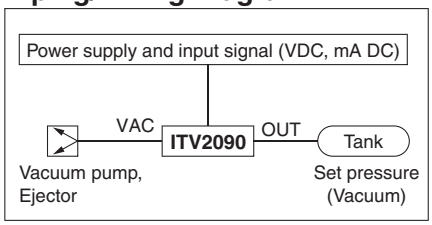

Standard Specifications

Model		ITV2090	ITV2091
Power supply	Voltage	24 VDC 10%	12 to 15 VDC
	Current consumption	Power supply voltage 24 VDC type: 0.12 A or less Note 6) Power supply voltage 12 to 15 VDC type: 0.18 A or less	
Minimum supply vacuum pressure Note 1)		Set pressure –13.3 kPa	
Maximum supply vacuum pressure		–101 kPa	
Set pressure range		–1.3 to –80 kPa	
Input signal	Current type Note 2)	4 to 20 mA DC, 0 to 20 mA DC	
	Voltage type	0 to 5 VDC, 0 to 10 VDC	
	Preset input	4 points (Negative common), 16 points (No common polarity)	
Input impedance	Current type	250 Ω or less Note 3)	
	Voltage type	Approximately 6.5 kΩ	
	Preset input	Power supply voltage 24 VDC type: Approximately 4.7 kΩ Power supply voltage 12 VDC type: Approximately 2.0 kΩ	
Output signal (Monitor output) Note 4)	Analogue output	1 to 5 VDC (Output impedance: Approximately 1 kΩ) 4 to 20 mA DC (Sink type) (Load impedance: 250 Ω or less) Output accuracy within ±6% (Full span)	
	Switch output	NPN open collector output: Max. 30 V, 80 mA PNP open collector output: Max. 80 mA	
Linearity		Within ±1% (Full span)	
Hysteresis		Within 0.5% (Full span)	
Repeatability		Within ±0.5% (Full span)	
Sensitivity		Within 0.2% (Full span)	
Temperature characteristics		Within ±0.12% (Full span)/C	
Output pressure display	Accuracy	±2%F.S. ±1 digit	
	Units	kPa Note 5) Minimum display: 1	
Ambient and fluid temperature		0 to 50°C (No condensation)	
Enclosure		IP65	
Weight Note 7)		350 g	

Note 1) The minimum supply vacuum pressure should be 13.3 kPa less than the maximum vacuum pressure setting value.
Note 2) 4 to 20 mA DC is not possible with the 2-wire type. Power supply voltage (24 VDC or 12 to 15 VDC) is required.
Note 3) Value for the state with no over current circuit included. If an allowance is provided for an over current circuit, the input impedance varies depending on the input power supply. This is 350 Ω or less for an input current of 20 mA DC.
Note 4) When measuring ITV analogue output from 1 to 5 VDC, if the load impedance is less than 100 kΩ, the analogue output monitor accuracy of within ±6% (full span) may not be available. The product with the accuracy of within ±6% is supplied upon your request. Output pressure remains unaffected.
Note 5) Please contact SMC regarding indication with other units of pressure.
Note 6) For communication models, the maximum current consumption is 0.16 A or less.
Note 7) For communication models, add roughly 80 g to the weight (100 g for the PROFIBUS DP).

Communication Specifications (CC, DE, PR, RC)

Model	ITV□0□0-CC□□	ITV□0□0-DE□□	ITV□0□0-PR□□	ITV□0□0-RC□□
Protocol	CC-Link	DeviceNet™	PROFIBUS DP	RS-232C
Version Note 1)	Ver 1.10	Volume 1 (Edition 3.8), Volume 3 (edition 1.5)	DP-V0	—
Communication speed	156 k/625 k 2.5 M/5 M/10 M bps	125 k/250 k/500 k bps	9.6 k/19.2 k/45.45 k 93.75 k/187.5 k/500 k 1.5 M/3 M/6 M/12 M bps	9.6 kbps
Configulation file Note 2)	—	EDS	GSD	—
I/O occupation area (input/output data)	4 word/4 word, 32 bit/32 bit (per station, remote device station)	16 bit/16 bit	16 bit/16 bit	—
Communication data resolution	12 bit (4096 resolution)	12 bit (4096 resolution)	12 bit (4096 resolution)	10 bit (1024 resolution)
Fail safe	HOLD Note 3)/CLEAR (Switch setting)	HOLD/CLEAR (Switch setting)	CLEAR	HOLD
Terminating resistor	—		Built into the product (Switch setting)	—

Note 1) Note that version information is subject to change.
Note 2) Configulation files can be downloaded from the SMC's website: http://www.smcworld.com
Note 3) The output HOLD value when a CC-Link communications error occurs can be set based on the bit area data.

Working Principle

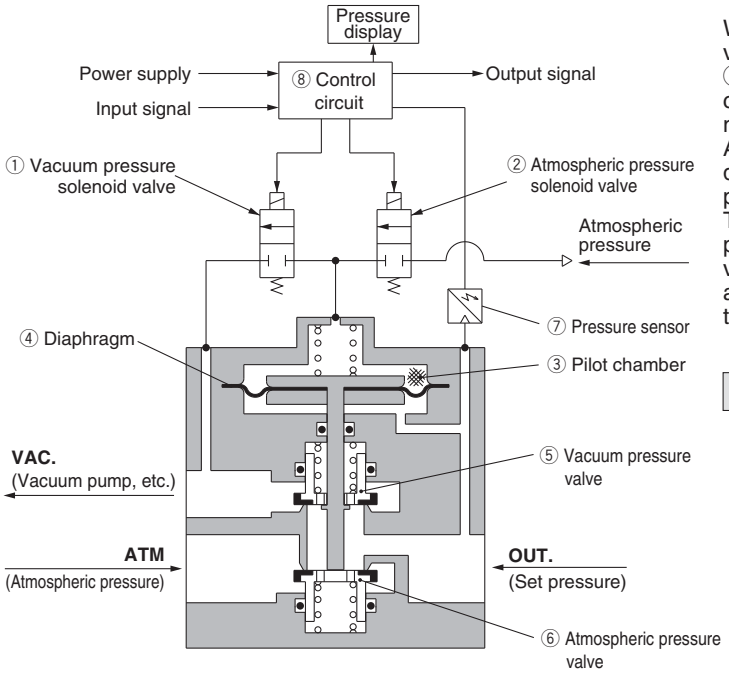

Working Principle

When the input signal increases, the vacuum pressure solenoid valve ① turns ON, and the atmospheric pressure solenoid valve ② turns OFF. Because of this, VAC. and the pilot chamber ③ are connected, the pressure in the pilot chamber ③ becomes negative and acts on the top of the diaphragm ④.
As a result, the vacuum pressure valve ⑤ which is linked to the diaphragm ④ opens, VAC. and OUT. are connected, and the set pressure becomes negative.
This negative pressure feeds back to the control circuit ⑧ via the pressure sensor ⑦. Then, a correct operation works until a vacuum pressure proportional to the input signal is reached, and a vacuum pressure is obtained which is always proportional to the input signal.

Block Diagram

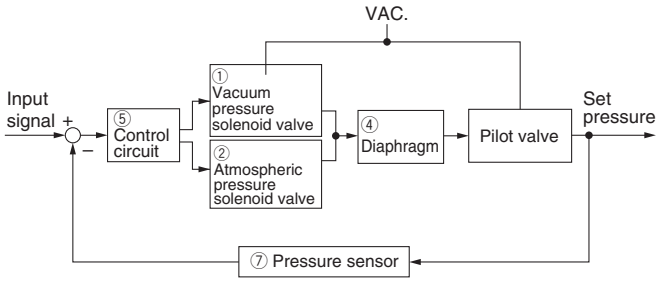

Series ITV209□

Linearity

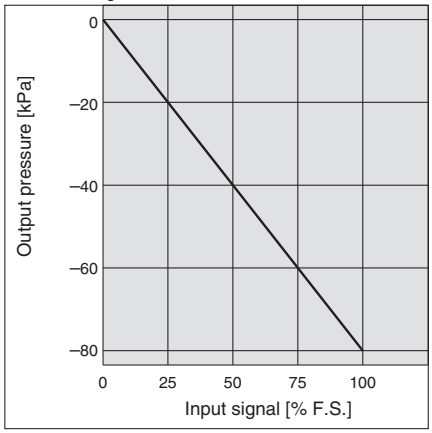

Hysteresis

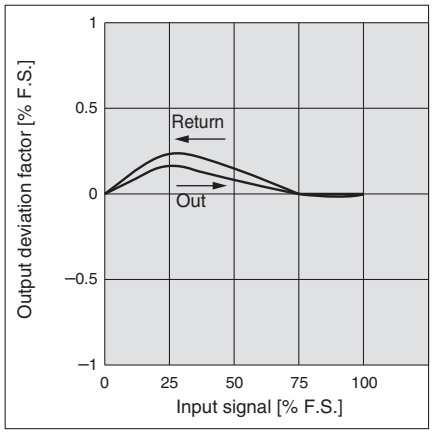

Repeatability

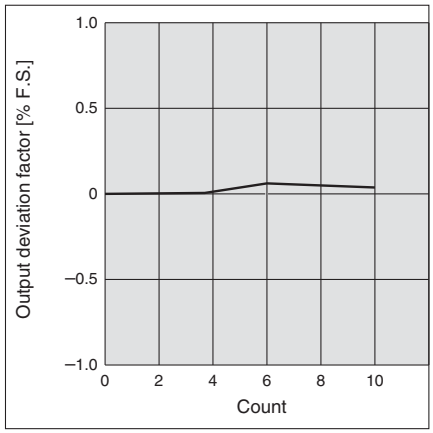

Pressure Characteristics

Set pressure: –20 kPa

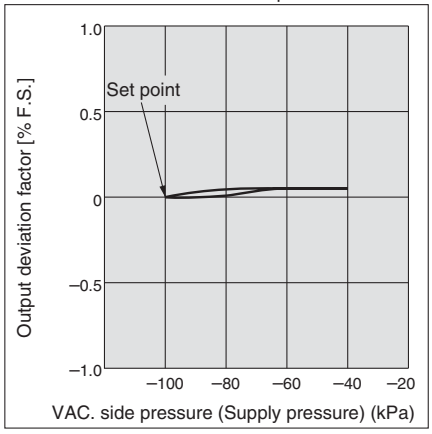

Flow Characteristics

Supply vacuum pressure: –100 kPa

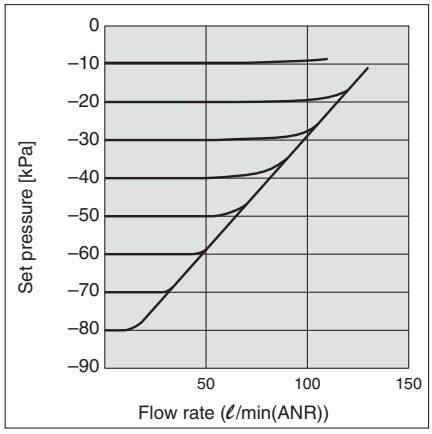

Flow characteristics measurement conditions

- Exhaust flow rate of the vacuum pump used for measurement: 500 ℓ/min (ANR)
- Inlet vacuum pressure: –100 kPa (When outlet flow rate is 0 ℓ/min (ANR))
- Maximum flow rate: 132 ℓ/min (ANR) (With inlet vacuum pressure at –39 kPa)

Dimensions

ITV209□

Flat bracket

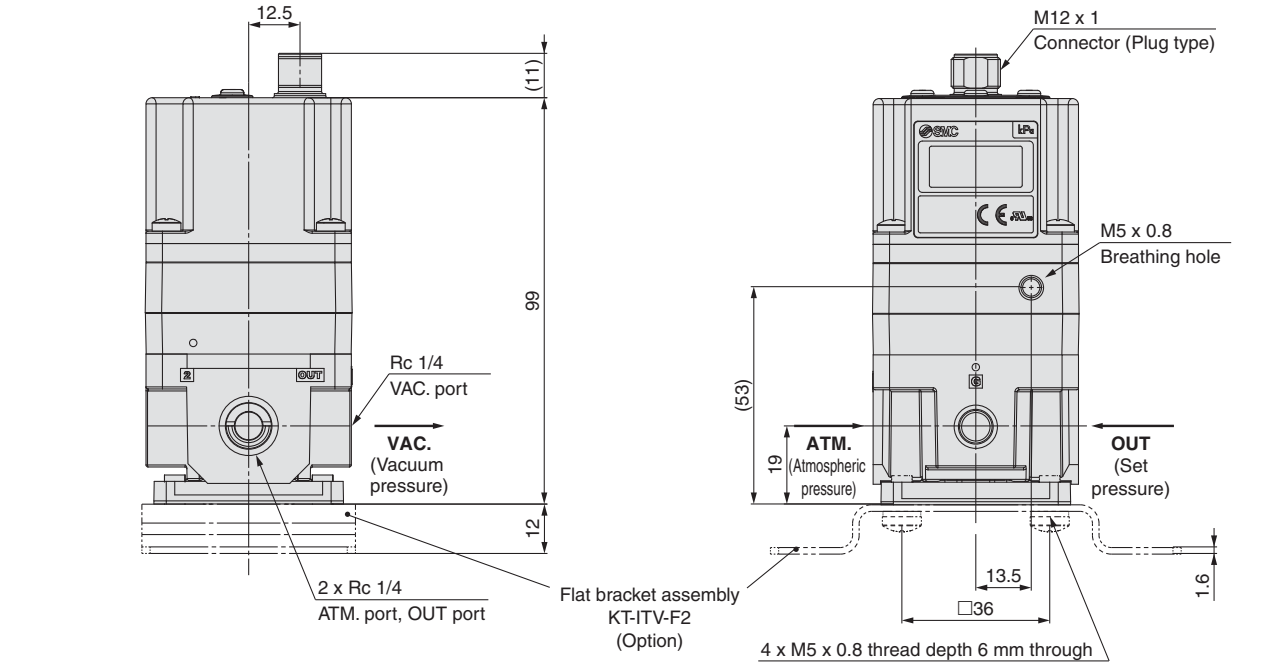

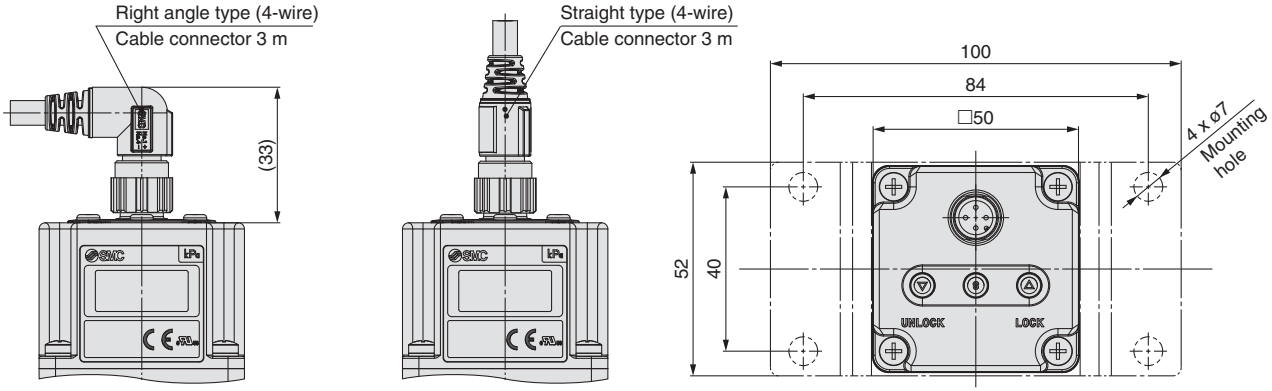

Note) Do not attempt to rotate the cable connector, as it does not turn.

L-bracket

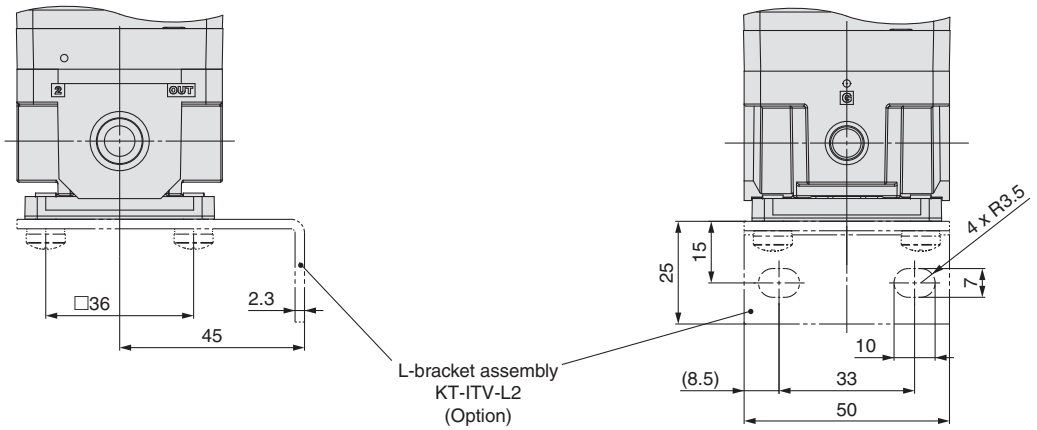

Dimensions (CC-Link, DeviceNet™, PROFIBUS DP and RS-232C)

CC-Link/ITV2090-CC

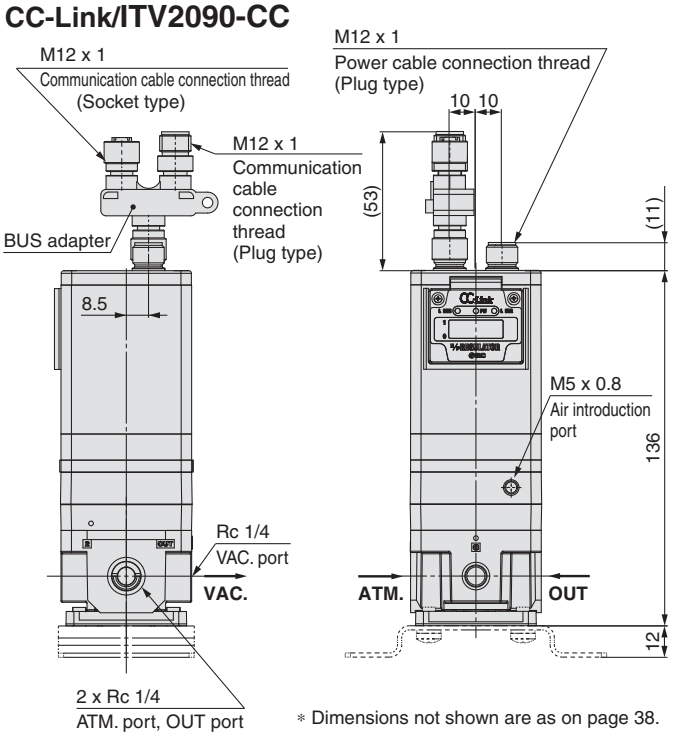

∗ Dimensions not shown are as on page 38.

DeviceNet™/ITV2090-DE

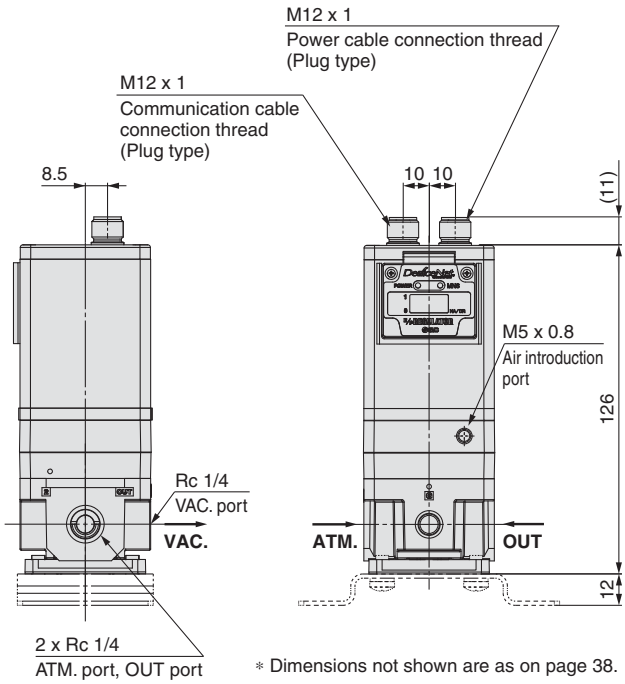

∗ Dimensions not shown are as on page 38.

PROFIBUS DP/ITV2090-PR

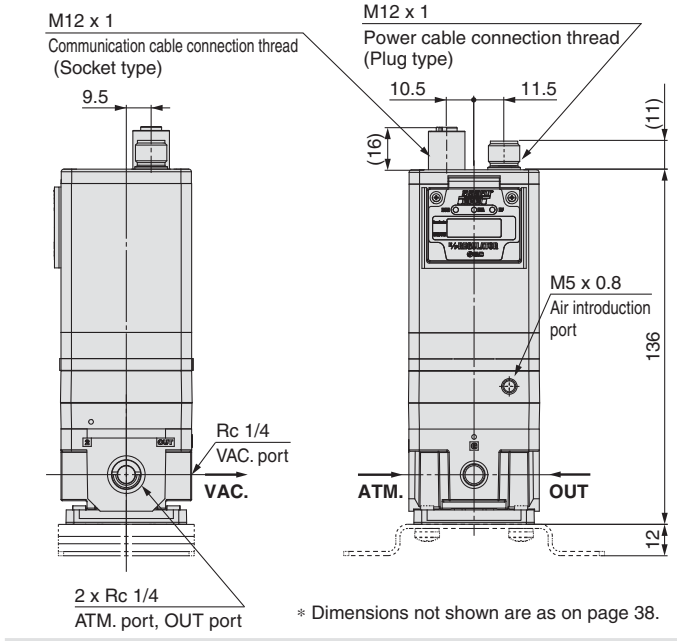

∗ Dimensions not shown are as on page 38.

RS-232C/ITV2090-RC

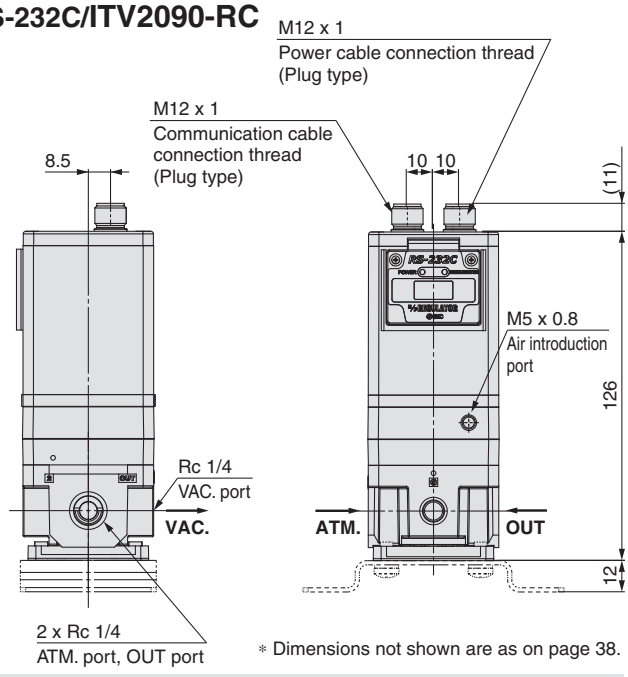

∗ Dimensions not shown are as on page 38.

With power cable connector

∗ **ITV2090-** 52 / 53 / CC / DE / PR / RC **common dimensions**

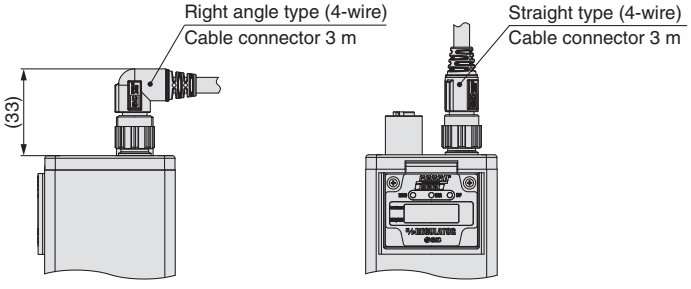

Note) Do not attempt to rotate the cable connector, as it does not turn.

Accessories (Option)/Part No.

Description		Part no.
Flat bracket assembly		KT-ITV-F2
L-bracket assembly		KT-ITV-L2
Power cable connector	**Straight type 3 m**	P398020-500-3
	Right angle type 3 m	P398020-501-3
Bus adapter (CC-Link model only)		EX9-ACY00-MJ

Dimensions

Flat bracket

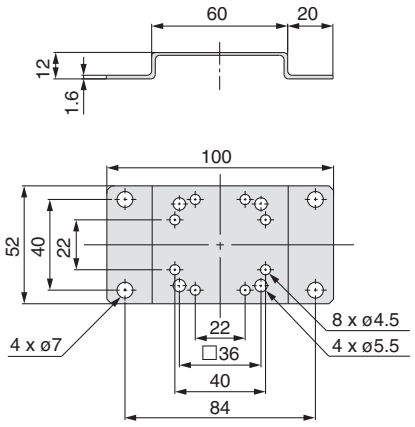

L-bracket

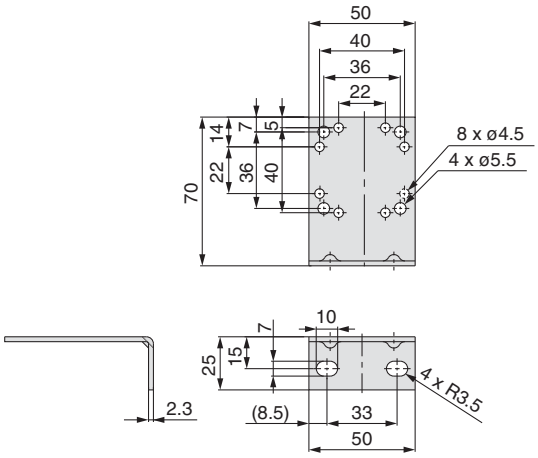

Series ITV0000/1000/2000/3000
Specific Product Precautions 1

Be sure to read before handling. Refer to back page for Safety Instructions, "Handling Precautions for SMC Products" (M-E03-3) for Common Precautions.

Series ITV0000/009□ Precautions

Air Supply

⚠ Caution

1. **Install an air filter near this product on the supply side. Select a filtration degree of 5 μm or less.**
2. **Compressed air containing large amounts of drainage can cause malfunction of this product and other pneumatic equipment. As a countermeasure, install an aftercooler, air dryer or Drain Catch, etc.**
3. **If large amounts of carbon dust are generated by the compressor, it can accumulate inside this product and cause malfunction.**

   For details on the above compressed air quality, refer to SMC's "Air Preparation Systems".

Wiring

⚠ Caution

Connect the cable to the connector on the body with the wiring arranged as shown below. Proceed carefully, as incorrect wiring can cause damage.

Further, use DC power with sufficient capacity and a low ripple.

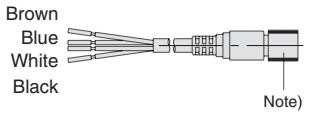

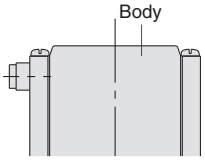

Terminal No.	1	2	3	4
Lead wire colour	Brown	White	Blue	Black
Wiring	Power	Signal	COM	Monitor

Note) A right angle type cable is also available. The entry direction for the right angle type connector is to downwards (SUP port side).
Never turn the connector as it is not designed to turn. Using force to turn the connector will damage the connector coupling.

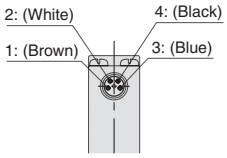

Wiring Diagrams

Current signal type

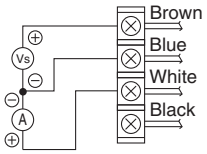

Vs: Power Supply 24 VDC ±10%
12 to 15 VDC
A : Input signals 4 to 20 mA DC
0 to 20 mA DC

Voltage signal type

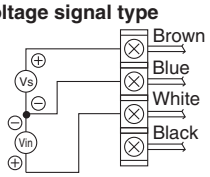

Vs : Power Supply 24 VDC ±10%
12 to 15 VDC
Vin: Input signals 0 to 5 VDC
0 to 10 VDC

Monitor output wiring diagram

Analogue output, voltage type

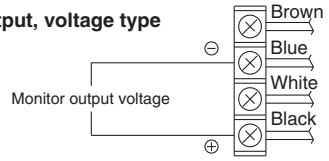

Handling

⚠ Caution

1. **Do not use a lubricator on the supply side of this product, as this can cause malfunction. When lubrication of terminal equipment is necessary, connect a lubricator on the output side of this equipment.**
2. **If electric power is shut off while pressure is being applied, pressure will be retained on the output side.**

   However, this output pressure is held only temporarily and is not guaranteed. If exhausting of this pressure is desired, shut off the power after reducing the set pressure, and discharge the air using a residual pressure exhaust valve, etc.
3. **If power to this product is cut off due to a power failure, etc. when it is in a controlled state, output pressure will be retained temporarily. Handle carefully when operating with output pressure released to the atmosphere, as air will continue to flow out.**
4. **If supply pressure to this product is interrupted while the power is still on, the internal solenoid valve will continue to operate and a humming noise may be generated.**

   Since the life of the product may be shortened, shut off the power supply also when supply pressure is shut off.
5. **This product is adjusted for each specification at the time of shipment from the factory. Avoid careless disassembly or removal of parts, as this can lead to malfunction.**
6. **The optional cable connector is a 4 wire type. When the monitor output (output or switch output) is not being used, keep it from touching the other wires as this can cause malfunction.**
7. **Please note that the right angle cable does not rotate and is limited to only one entry direction.**
8. **Take the following steps to avoid malfunction due to noise.**
   1) Remove power supply noise during operation by installing a line filter, etc. in the AC power line.
   2) For avoiding the influence of noise or static electricity, install this product and its wiring as far as possible from strong electric fields such as those of motors and power lines, etc.
   3) Be sure to implement protective measures against load surge for induction loads (solenoid valves, relays, etc.).
9. **The product characteristics are confined to the static state. When air is consumed on the output side, and especially used in the system with large leakage, pressure cannot approach the set pressure and the service life is drastically shortened with a humming noise of the solenoid valve.**
10. **For details on the handling of this product, refer to the instruction manual which is included with the product.**

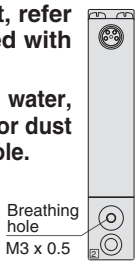

11. **In locations where the body is exposed to water, dust, etc., there is a possibility that moisture or dust could enter the body through the breathing hole.**

    Mount a fitting and tube (M-3AU-3 fitting and TIU01m-mm tube recommended) onto the breathing hole and run the tube to a location not exposed to moisture or dust, etc.
12. **If this product will be used in a sealed environment, such as inside an inspection box, a ventilation fan should be installed to ensure adequate ventilation as this product can generate heat in some operating conditions.**
    When the power is turned on, a noise may be generated as a means of checking the operating condition of the solenoid valve. This noise is normal and does not indicate a fault.

Series ITV0000/1000/2000/3000
Specific Product Precautions 2

Be sure to read before handling. Refer to back page for Safety Instructions, "Handling Precautions for SMC Products" (M-E03-3) for Common Precautions.

Series ITV1000/2000/3000/209□ Precautions

Piping

⚠ Warning

1. Screw piping together with the recommended proper torque while holding the side that has female threads.

Looseness or faulty sealing will occur if tightening torque is insufficient, while thread damage will result if the torque is excessive. Furthermore, if the side with the female threads is not held while tightening, excessive force will be applied directly to piping brackets, etc. causing damage or other problems.

Recommended proper torque: N·m

Connection thread	1/8	1/4	3/8	1/2
Torque	7 to 9	12 to 14	22 to 24	28 to 30

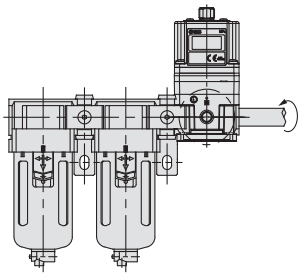

2. Do not allow twisting or bending moment to be applied other than the weight of the equipment itself.

Provide separate support for external piping, as damage may otherwise occur.

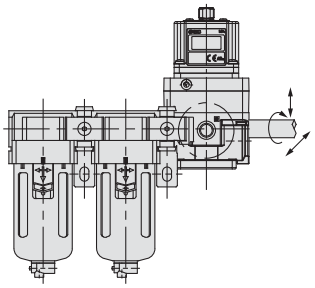

3. Since excessive moment loads and the propagation of vibrations, etc. can easily result from inflexible piping made of materials such as steel, avoid these problems by using flexible tubing for intermediate connections.

⚠ Caution

1. Preparation before piping

Before piping is connected, it should be thoroughly blown out with air (flushing) or washed to remove chips, cutting oil and other debris from inside the pipe.

2. Wrapping of pipe tape

When screwing together pipes and fittings, etc., be certain that chips from the pipe threads and sealing material do not get inside the piping.

Also, when pipe tape is used, leave 1.5 to 2 thread ridges exposed at the end of the threads.

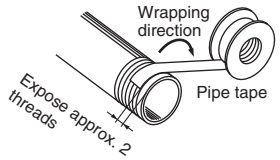

Operating Environment

⚠ Warning

1. Do not operate in locations having an atmosphere of corrosive gases, chemicals, sea water, or where there will be contact with the same.

2. Do not operate in locations where vibration or impact occurs.

⚠ Caution

1. In locations where the body is exposed to water, steam, dust, etc., there is a possibility that moisture or dust could enter the body through the EXH (solenoid) ports, thereby causing problems.

2. To overcome this, simply install tubing to each port, using the fittings, and extend the tubing so that the other end is at a location where no water splash, etc. occurs. Make sure not to bend, or block the I.D. of the tubing as this will have a detrimental affect on the pressure control.

3. Do not operate in locations where vibration or impact occurs.

4. In locations which receive direct sunlight, provide a protective cover, etc.

5. In locations near heat sources, block off any radiated heat.

6. In locations where there is contact with spatter from water, oil or solder etc., implement suitable protective measures.

Air Supply

⚠ Warning

1. Employ suitable protective measures in locations where there is contact with water droplets, oil or welding spatter, etc.

2. Consult with SMC when used in power plants, or if instrumentation related.

⚠ Caution

1. Install an air filter near this product on the supply side. Select a filtration degree of 5 m or less.

2. Compressed air containing large amounts of drainage can cause malfunction of this product and other pneumatic equipment. As a countermeasure, install an aftercooler, air dryer or Drain Catch, etc.

3. If large amounts of carbon dust are generated by the compressor, it can accumulate inside this product and cause malfunction. For details on the above compressed air quality, refer to SMC's "Air Preparation Systems".

Series ITV0000/1000/2000/3000
Specific Product Precautions 3

Be sure to read before handling. Refer to back page for Safety Instructions, "Handling Precautions for SMC Products" (M-E03-3) for Common Precautions.

Series ITV1000/2000/3000/209□ Precautions

Handling

⚠Caution

1. **Do not use a lubricator on the supply side of this product, as this can cause malfunction. When lubrication of terminal equipment is necessary, connect a lubricator on the output side of this equipment.**
2. **If electric power is shut off while pressure is being applied, pressure will be retained on the output side.**
   However, this output pressure is held only temporarily and is not guaranteed. If exhausting of this pressure is desired, shut off the power after reducing the set pressure, and discharge the air using a residual pressure exhaust valve, etc.
3. **If power to this product is cut off due to a power failure, etc. when it is in a controlled state, output pressure will be retained temporarily. Handle carefully when operating with output pressure released to the atmosphere, as air will continue to flow out.**
4. **If supply pressure to this product is interrupted while the power is still on, the internal solenoid valve will continue to operate and a humming noise may be generated. Since the life of the product may be shortened, shut off the power supply also when supply pressure is shut off.**
5. **In this product, the output side pressure cannot be completely relieved within the range of 0.005 MPa or less. If it is desired to reduce the pressure completely to 0 MPa, install a 3 way valve or other device on the output side to exhaust the pressure.**
6. **This product is adjusted for each specification at the time of shipment from the factory. Avoid careless disassembly or removal of parts, as this can lead to malfunction.**
7. **The optional cable connector is a 4-wire type. When the monitor output (analogue output or switch output) is not being used, keep it from touching the other wires as this can cause malfunction.**
8. **Please note that the right angle cable does not rotate and is limited to only one entry direction.**
9. **Take the following steps to avoid malfunction due to noise.**
   1) Remove power supply noise during operation by installing a line filter, etc. in the AC power line.
   2) For avoiding the influence of noise or static electricity, install this product and its wiring as far as possible from strong electric fields such as those of motors and power lines, etc.
   3) Be sure to implement protective measures against load surge for induction loads (solenoid valves, relays, etc.).

Handling

⚠Caution

10. **Due to the large volume of the output side, a loud exhaust noise will be produced when being used for the purpose of a relief function. Therefore, install a silencer (SMC Series AN200 or AN400) on the exhaust port (EXH port). The port sizes are Rc 1/8, Rc 1/4 and Rc 1/2.**
11. **Specifications on page 10 is in case of static environment. Pressure may fluctuate when air is consumed at the output side.**
12. **For details on the handling of this product, refer to the instruction manual which is included with the product.**

Design and Selection

⚠Caution

1. **The direct-current power supply to combine should be UL authorized power supply.**
   (1) Limited voltage current circuit in accordance with UL 508.
   A circuit in which power is supplied by the secondary coil of a transformer that meets the following conditions.
   • Maximum voltage (with no load):
   30 Vrms (42.4 V peak) or less
   • Maximum current:
   (1) 8 A or less (including when short circuited)
   (2) limited by circuit protector (such as fuse) with the following ratings.

No load voltage (V peak)	Max. current rating
0 to 20 [V]	5.0
Above 20 to 30 [V]	$\frac{100}{\text{Peak voltage}}$

   (2) A circuit using max. 30 Vrms or less (42.4 V peak), which is powered by UL1310 or UL1585 compatible Class-2 power supply.

2. **Operate these products only within the specified voltage.**
   Using voltages beyond the specified levels could cause faults or malfunctions.
3. **Use 0 V as the baseline for the power supplied to the unit for output, control and input.**

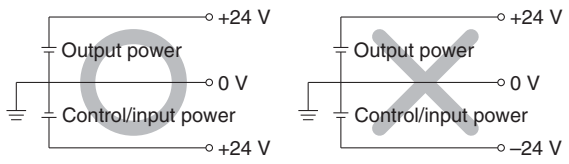

Series ITV0000/1000/2000/3000
Specific Product Precautions 4

Be sure to read before handling. Refer to back page for Safety Instructions, "Handling Precautions for SMC Products" (M-E03-3) for Common Precautions.

Series ITV1000/2000/3000/209□ Precautions

Wiring

⚠Caution

Connect the cable to the connector on the body with the wiring arranged as shown below. Proceed carefully, as incorrect wiring can cause damage.
Further, use DC power with sufficient capacity and a low ripple.

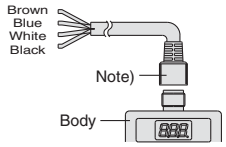

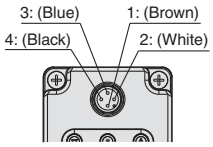

Current Signal Type
Voltage Signal Type

1	Brown	Power supply
2	White	Input signal
3	Blue	GND (COMMON)
4	Black	Monitor output

Preset Input Type

1	Brown	Power supply
2	White	Input signal 1
3	Blue	GND (COMMON)
4	Black	Input signal 2

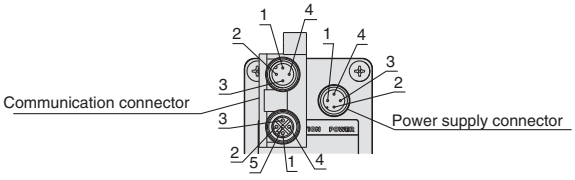

CC-Link

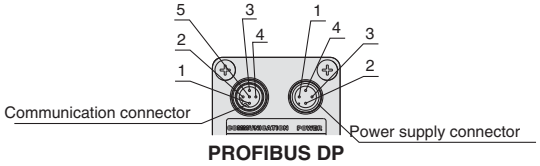

PROFIBUS DP

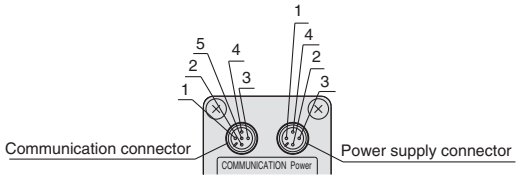

DeviceNet™, RS-232C

IN/OUT communication connector				
Pin No.	CC-Link	DeviceNet™	PROFIBUS DP	RS-232C
1	SLD	DRAIN	NC	NC
2	DB	V+	RxD/TxD-N	TxD
3	DG	V–	NC	RxD
4	DA	CAN_H	RxD/TxD-P	GND
5	NC	CAN_L	NC	NC

Power supply connector				
Pin No.	CC-Link	DeviceNet™	PROFIBUS DP	RS-232C
1	Vcc	Vcc	Vcc	Vcc
2	FG	No connection	NC	NC
3	GND	GND	GND	GND
4	NC	No connection	NC	FG

Note) The cable is also available in a right angle type. (Communication cable: straight type only)
A right angle type connector is attached facing left (towards the SUP port). On communication models, the connector faces backwards (towards the EXH port). Do not attempt to rotate, as the connector does not turn.

■ **Trademark Information**
DeviceNet™ is a trademark of ODVA.

Wiring diagram

Current signal type

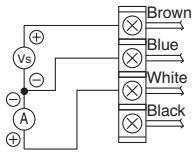

Vs : Power supply 24 VDC
12 to 15 VDC
A : Input signal 4 to 20 mA DC
0 to 20 mA DC

Voltage signal type

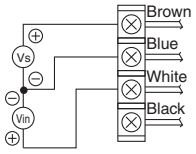

Vs : Power supply 24 VDC
12 to 15 VDC
Vin: Input signal 0 to 5 VDC
0 to 10 VDC

Preset input type

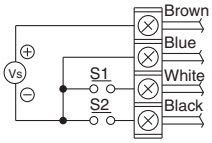

Vs : Power supply 24 VDC
12 to 15 VDC

One of the preset pressures P1 through P4 is selected by the ON/OFF combination of S1 and S2.

S1	OFF	ON	OFF	ON
S2	OFF	OFF	ON	ON
Preset pressure	P1	P2	P3	P4

∗ For safety reasons, it is recommended that one of the preset pressures be set to 0 MPa.
∗ Preset pressures are set based on the minimum unit for output display.

MPa	kgf/cm²	bar	psi	kPa
0.001	0.01	0.01	0.1	1

· Note that this is 1 psi for 130 psi types.

Monitor output wiring diagram

Analogue output: Voltage type

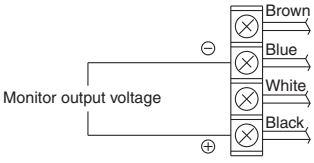

Analogue output: Current type (Sink type)

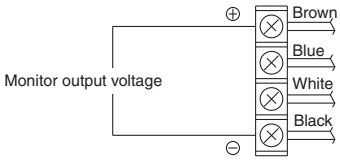

Switch output: NPN type

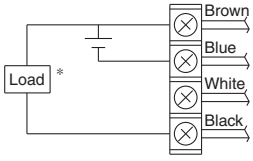

Switch output: PNP type

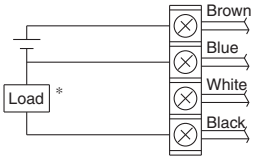

∗ When 80 mA DC or more is applied, detecting device for overcurrentstarts activating and then emits an error signal. (Error number "5")

Series ITV0000/1000/2000/3000
Specific Product Precautions 5

Be sure to read before handling. Refer to back page for Safety Instructions, "Handling Precautions for SMC Products" (M-E03-3) for Common Precautions.

Series ITV1000/2000/3000/209□ Precautions

Set Pressure Range

The set pressure range, by unit of standard measured pressure, is shown in the table below.

Set pressure range, by unit of standard measured pressure

Unit	Set pressure range			
	ITV□01□	**ITV□03□**	**ITV□05□**	**ITV209□**
MPa	0.005 to 0.1	0.005 to 0.5	0.005 to 0.9	—
kgf/cm^2	0.05 to 1	0.05 to 5	0.05 to 9	—
bar	0.05 to 1	0.05 to 5	0.05 to 9	—
psi	0.7 to 15	0.7 to 70	0.7 to 130	—
kPa	5 to 100	5 to 500	5 to 900	–1.3 to –80

CE Marking

When using the power supply cable for the CE compliant product (including Made to Order), mount the ferrite core on the cable according to the following "Ferrite core necessity".

• Series ITV0000

Model	Ferrite core necessity	Recommended power supply cable
ITV0000-□□	Unnecessary	M8-4DSX3MG4 (Straight type) ELWIKA-KV4408 PVC025 2M (Right angle type)

• Series ITV1000/2000/3000

Model	Ferrite core necessity	Recommended power supply cable
ITV□□-□□	Necessary	P398010-12 (Straight type) (With ferrite core) P398010-13 (Right angle type) (With ferrite core)
ITV□□-CC□	Unnecessary	P398020-500-3 (Straight type) P398020-501-3 (Right angle type)
ITV□□-DE□	Necessary (Ferrite core is supplied as an accessory for the body.)	P398020-500-3 (Straight type) P398020-501-3 (Right angle type)
ITV□□-PR□ **ITV□□-RC□**	Necessary (Ferrite core is supplied as an accessory for the body.)	P398020-500-3 (Straight type) P398020-501-3 (Right angle type)

Note) Recommended power supply cable length is 3 m. (ELWIKA-KV4408 PVC025 2M is 2 m.) If any other length is desired, please consult with SMC.

Series ITV0000/1000/2000/3000
Specific Product Precautions 6

Be sure to read before handling. Refer to back page for Safety Instructions, "Handling Precautions for SMC Products" (M-E03-3) for Common Precautions.

Series ITV009□/209□ Precautions

Handling

⚠Caution

1. Connect the vacuum pump to the port, which is labelled "VAC".
2. Pressure adjustment changes from "atmospheric pressure to vacuum pressure" when the input signal is increased, and from "vacuum pressure to atmospheric pressure" when the input signal is decreased.
3. When adjusting the vacuum pressure, be careful not to block the atmospheric pressure inlet port labelled "ATM".
4. Since this product is designed exclusively for use with negative pressure, be careful not to apply positive pressure in error.
5. In cases where the vacuum pump being used has a relatively small capacity, or the piping has a small inside diameter, etc., large variations in the set pressure (the range of pressure variation when changing from no flow to flow state) may appear. In this situation, the vacuum pump or the piping, etc. should be changed. In cases where it is not practical to change the vacuum pump, install a capacity tank (volume depending on the operating conditions) on the VAC side.
6. The vacuum pressure response time after a change in the input signal is influenced by the internal volume on the setting side (including piping). Since the capacity of the vacuum pump also influences the response time, give careful consideration to these points before operation.
7. If the electric power is shut off when in a control state, the pressure on the setting side will go into a holding condition. However, this setting side pressure will be held only temporarily and is not guaranteed. In addition, when atmospheric pressure is desired, shut off the power after reducing the set pressure, and then introduce atmospheric pressure by using a vacuum release valve, etc.
8. If the power for this product is cut off by a power failure, etc. when it is in a controlled state, the setting side pressure will be held temporarily. Further, if operated without sealing the setting side so that atmospheric air is sucked in, handle with care as air will continue to be sucked in.
9. If the VAC side pressure to this product is interrupted while the power is still on, the internal solenoid valve will continue to operate and may cause a humming noise. Since this may shorten the life of the product, be sure to shut off the power when the VAC side pressure is shut off.
10. The setting side pressure cannot be completely released from this product in the range below –1.3 kPa. In cases where the pressure needs to be reduced completely to 0 kPa, install a 3 port valve, etc. on the setting side to discharge the residual pressure.
11. This product is adjusted for each specification at the factory before shipment. Avoid careless disassembly or removal of parts, as this can cause failure.
12. The optional cable connector is a 4-wire type. When the monitor output (analogue output, switch output) is not being used, keep it from touching the other wires, as this can cause malfunction.
13. Use caution that the right angle cable does not rotate and is limited to only one entry direction.
14. Take the following steps to avoid malfunction due to noise.
    1) Eliminate power supply noise during operation by installing a line filter, etc. in the AC power line.
    2) For avoiding the influence of noise or static electricity, install this product and its wiring as far as possible from strong electric fields such as those of motors and power lines, etc.
    3) Make sure to take protective measures against load surge for an induction load (solenoid valves, relays, etc.).
15. Refer to the instruction manual included with the product for details on its handling.

⚠ Safety Instructions

These safety instructions are intended to prevent hazardous situations and/or equipment damage. These instructions indicate the level of potential hazard with the labels of **"Caution," "Warning"** or **"Danger."** They are all important notes for safety and must be followed in addition to International Standards (ISO/IEC)*1), and other safety regulations.

⚠ Caution: **Caution** indicates a hazard with a low level of risk which, if not avoided, could result in minor or moderate injury.

⚠ Warning: **Warning** indicates a hazard with a medium level of risk which, if not avoided, could result in death or serious injury.

⚠ Danger : **Danger** indicates a hazard with a high level of risk which, if not avoided, will result in death or serious injury.

*1) ISO 4414: Pneumatic fluid power – General rules relating to systems.
ISO 4413: Hydraulic fluid power – General rules relating to systems.
IEC 60204-1: Safety of machinery – Electrical equipment of machines.
(Part 1: General requirements)
ISO 10218-1: Manipulating industrial robots - Safety.
etc.

⚠ Warning

1. **The compatibility of the product is the responsibility of the person who designs the equipment or decides its specifications.**
Since the product specified here is used under various operating conditions, its compatibility with specific equipment must be decided by the person who designs the equipment or decides its specifications based on necessary analysis and test results. The expected performance and safety assurance of the equipment will be the responsibility of the person who has determined its compatibility with the product. This person should also continuously review all specifications of the product referring to its latest catalogue information, with a view to giving due consideration to any possibility of equipment failure when configuring the equipment.

2. **Only personnel with appropriate training should operate machinery and equipment.**
The product specified here may become unsafe if handled incorrectly. The assembly, operation and maintenance of machines or equipment including our products must be performed by an operator who is appropriately trained and experienced.

3. **Do not service or attempt to remove product and machinery/equipment until safety is confirmed.**
   1. The inspection and maintenance of machinery/equipment should only be performed after measures to prevent falling or runaway of the driven objects have been confirmed.
   2. When the product is to be removed, confirm that the safety measures as mentioned above are implemented and the power from any appropriate source is cut, and read and understand the specific product precautions of all relevant products carefully.
   3. Before machinery/equipment is restarted, take measures to prevent unexpected operation and malfunction.

4. **Contact SMC beforehand and take special consideration of safety measures if the product is to be used in any of the following conditions.**
   1. Conditions and environments outside of the given specifications, or use outdoors or in a place exposed to direct sunlight.
   2. Installation on equipment in conjunction with atomic energy, railways, air navigation, space, shipping, vehicles, military, medical treatment, combustion and recreation, or equipment in contact with food and beverages, emergency stop circuits, clutch and brake circuits in press applications, safety equipment or other applications unsuitable for the standard specifications described in the product catalogue.
   3. An application which could have negative effects on people, property, or animals requiring special safety analysis.
   4. Use in an interlock circuit, which requires the provision of double interlock for possible failure by using a mechanical protective function, and periodical checks to confirm proper operation.

⚠ Caution

1. **The product is provided for use in manufacturing industries.**
The product herein described is basically provided for peaceful use in manufacturing industries.
If considering using the product in other industries, consult SMC beforehand and exchange specifications or a contract if necessary.
If anything is unclear, contact your nearest sales branch.

Limited warranty and Disclaimer/ Compliance Requirements

The product used is subject to the following "Limited warranty and Disclaimer" and "Compliance Requirements".
Read and accept them before using the product.

Limited warranty and Disclaimer

1. The warranty period of the product is 1 year in service or 1.5 years after the product is delivered.*2)
Also, the product may have specified durability, running distance or replacement parts. Please consult your nearest sales branch.
2. For any failure or damage reported within the warranty period which is clearly our responsibility, a replacement product or necessary parts will be provided.
This limited warranty applies only to our product independently, and not to any other damage incurred due to the failure of the product.
3. Prior to using SMC products, please read and understand the warranty terms and disclaimers noted in the specified catalogue for the particular products.

*2) **Vacuum pads are excluded from this 1 year warranty.**
A vacuum pad is a consumable part, so it is warranted for a year after it is delivered.
Also, even within the warranty period, the wear of a product due to the use of the vacuum pad or failure due to the deterioration of rubber material are not covered by the limited warranty.

Compliance Requirements

1. The use of SMC products with production equipment for the manufacture of weapons of mass destruction (WMD) or any other weapon is strictly prohibited.
2. The exports of SMC products or technology from one country to another are governed by the relevant security laws and regulations of the countries involved in the transaction. Prior to the shipment of a SMC product to another country, assure that all local rules governing that export are known and followed.

⚠ Safety Instructions | Be sure to read "Handling Precautions for SMC Products" (M-E03-3) before using.

SMC Corporation (Europe)

Austria	☎+43 (0)2262622800	www.smc.at	office@smc.at
Belgium	☎+32 (0)33551464	www.smcpneumatics.be	info@smcpneumatics.be
Bulgaria	☎+359 (0)2807670	www.smc.bg	office@smc.bg
Croatia	☎+385 (0)13707288	www.smc.hr	office@smc.hr
Czech Republic	☎+420 541424611	www.smc.cz	office@smc.cz
Denmark	☎+45 70252900	www.smcdk.com	smc@smcdk.com
Estonia	☎+372 6510370	www.smcpneumatics.ee	smc@smcpneumatics.ee
Finland	☎+358 207513513	www.smc.fi	smcfi@smc.fi
France	☎+33 (0)164761000	www.smc-france.fr	promotion@smc-france.fr
Germany	☎+49 (0)61034020	www.smc-pneumatik.de	info@smc-pneumatik.de
Greece	☎+30 210 2717265	www.smchellas.gr	sales@smchellas.gr
Hungary	☎+36 23511390	www.smc.hu	office@smc.hu
Ireland	☎+353 (0)14039000	www.smcpneumatics.ie	sales@smcpneumatics.ie
Italy	☎+39 0292711	www.smcitalia.it	mailbox@smcitalia.it
Latvia	☎+371 67817700	www.smclv.lv	info@smclv.lv
Lithuania	☎+370 5 2308118	www.smclt.lt	info@smclt.lt
Netherlands	☎+31 (0)205318888	www.smcpneumatics.nl	info@smcpneumatics.nl
Norway	☎+47 67129020	www.smc-norge.no	post@smc-norge.no
Poland	☎+48 (0)222119616	www.smc.pl	office@smc.pl
Portugal	☎+351 226166570	www.smc.eu	postpt@smc.smces.es
Romania	☎+40 213205111	www.smcromania.ro	smcromania@smcromania.ro
Russia	☎+7 8127185445	www.smc-pneumatik.ru	info@smc-pneumatik.ru
Slovakia	☎+421 (0)413213212	www.smc.sk	office@smc.sk
Slovenia	☎+386 (0)73885412	www.smc.si	office@smc.si
Spain	☎+34 902184100	www.smc.eu	post@smc.smces.es
Sweden	☎+46 (0)86031200	www.smc.nu	post@smc.nu
Switzerland	☎+41 (0)523963131	www.smc.ch	info@smc.ch
Turkey	☎+90 212 489 0 440	www.smcpnomatik.com.tr	info@smcpnomatik.com.tr
UK	☎+44 (0)845 121 5122	www.smcpneumatics.co.uk	sales@smcpneumatics.co.uk

SMC CORPORATION Akihabara UDX 15F, 4-14-1, Sotokanda, Chiyoda-ku, Tokyo 101-0021, JAPAN Phone: 03-5207-8249 FAX: 03-5298-5362

1st printing SP printing SP 00 Printed in Spain

Specifications are subject to change without prior notice and any obligation on the part of the manufacturer.