Ultra Series™ Crystal Oscillator
Si548 Data Sheet

Ultra Low Jitter I2C Programmable XO (95 fs), 0.2 to 1500 MHz

The Si548 Ultra Series™ oscillator utilizes Silicon Laboratories' advanced 4th generation DSPLL® technology to provide an ultra-low jitter, low phase noise clock at any output frequency. The device is user-programmed via simple I2C commands to provide any frequency from 0.2 to 1500 MHz with <1 ppb resolution and maintains exceptionally low jitter for both integer and fractional frequencies across its operating range. The Si548 offers excellent reliability and frequency stability as well as guaranteed aging performance. On-chip power supply filtering provides industry-leading power supply noise rejection, simplifying the task of generating low jitter clocks in noisy systems that use switched-mode power supplies. The Si548 has a dramatically simplified supply chain that enables Silicon Labs to ship custom frequency samples 1-2 weeks after receipt of order. Unlike a traditional XO, where a different crystal is required for each output frequency, the Si548 uses one simple crystal and a DSPLL IC-based approach to provide the desired output frequency. The Si548 is factory-configurable for a wide variety of user specifications, including startup frequency, I2C address, output format, and temperature stability. Specific configurations are factory-programmed at time of shipment, eliminating the long lead times associated with custom oscillators.



2.5 x 3.2 mm

Pin Assignments

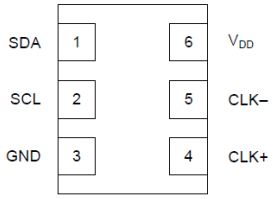

KEY FEATURES

- I2C programmable to any frequency from 0.2 to 1500 MHz with < 1 ppb resolution
- Ultra low jitter: 95 fs Typ RMS (12 kHz – 20 MHz)
- I2C interface supports 100 kbps, 400 kbps, and 1 Mbps (Fast Mode Plus)
- Low additive jitter when I2C is active (15 fs Typ)
- Excellent PSNR and supply noise immunity: –80 dBc Typ
- 3.3 V, 2.5 V, and 1.8 V V_{DD} supply operation from the same part number
- LVPECL, LVDS, CML, HCSL, CMOS, and Dual CMOS output options
- Small 2.5x3.2 package size
- Samples available with 1-2 week lead times

APPLICATIONS

- 100G/200G/400G OTN, coherent optics, PAM4
- 10G/40G/100G optical ethernet
- 3G-SDI/12G-SDI/24G-SDI broadcast video
- Servers, switches, storage, search acceleration
- Test and measurement
- FPGA/ASIC clocking

Pin #	Descriptions
1	SDA = I2C Serial Data
2	SCL = I2C Serial Clock
3	GND = Ground
4	CLK+ = Clock output
5	CLK- = Complementary clock output. Not used for CMOS.
6	VDD = Power supply

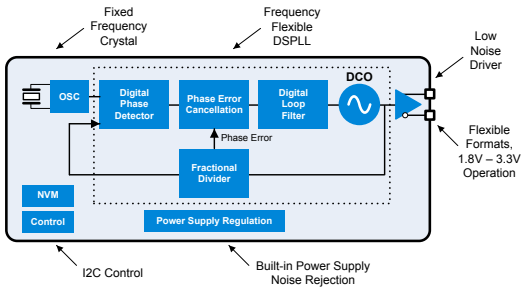

1. Ordering Guide

The Si548 XO supports a variety of options including startup frequency, output format, and temperature stability, as shown in the chart below. Specific device configurations are programmed into the part at time of shipment, and samples are available in 1-2 weeks. Silicon Laboratories provides an online part number configuration utility to simplify this process. Refer to www.silabs.com/oscillators to access this tool and for further ordering instructions.

XO Series	Description
548	I2C Oscillator

	Temp Stability	Total Stability [2]
A	± 20 ppm	± 50 ppm
B	± 10 ppm	± 25 ppm
C	± 7 ppm	± 20 ppm

	Package
C	2.5x3.2 mm

	Temperature Grade
G	-40 to 85 °C

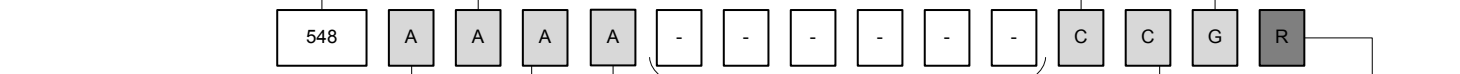

Signal Format	VDD Range	Order Option
LVPECL	2.5, 3.3 V	A
LVDS	1.8, 2.5, 3.3 V	B
CMOS	1.8, 2.5, 3.3 V	C
CML	1.8, 2.5, 3.3 V	D
HCSL	1.8, 2.5, 3.3 V	E
Dual CMOS (In-Phase)	1.8, 2.5, 3.3 V	F
Dual CMOS (Complementary)	1.8, 2.5, 3.3 V	G
HCSL-Fast	1.8, 2.5, 3.3 V	H
Custom [1]	1.8, 2.5, 3.3 V	X

Code	Supported Frequency Range
A	0.2-1500 MHz
B	0.2-800 MHz
C	0.2-325 MHz (CMOS available to 250 MHz)

I2C Pinout		
Code	SDA	SCL
A	Pin 1	Pin 2

Device Revision

Code	Reel
R	Tape and Reel
<Blank>	Coil Tape

Frequency Code [3]	Description
xxxxxx	The Si548 supports a user-defined startup frequency in the range selected by the Supported Frequency Range code. A user-defined 7-bit I2C address is supported. Each unique startup configuration and I2C address combination is assigned a 6-digit code.

Notes:

1. Contact Silicon Labs for non-standard configurations.
2. Total stability includes temp stability, initial accuracy, load pulling, VDD variation, and 20 year aging at 70 °C.
3. Create custom part numbers at www.silabs.com/oscillators.

1.1 Technical Support

Frequently Asked Questions (FAQ)	www.silabs.com/Si548-FAQ
Oscillator Phase Noise Lookup Utility	www.silabs.com/oscillator-phase-noise-lookup
Quality and Reliability	www.silabs.com/quality
Development Kits	www.silabs.com/oscillator-tools

2. Electrical Specifications

Table 2.1. Electrical Specifications

V_{DD} = 1.8 V, 2.5 or 3.3 V ± 5%, T_A = –40 to 85 ºC

Parameter	Symbol	Test Condition/Comment	Min	Typ	Max	Unit
Temperature Range	T_A		–40	—	85	ºC
Frequency Range	F_{CLK}	LVPECL, LVDS, CML	0.2	—	1500	MHz
		HCSL	0.2	—	400	MHz
		CMOS, Dual CMOS	0.2	—	250	MHz
Supply Voltage	V_{DD}	3.3 V	3.135	3.3	3.465	V
		2.5 V	2.375	2.5	2.625	V
		1.8 V	1.71	1.8	1.89	V
Supply Current	I_{DD}	LVPECL (output enabled)	—	107	153	mA
		LVDS/CML (output enabled)	—	83	121	mA
		HCSL (output enabled)	—	86	126	mA
		HCSL-Fast (output enabled)	—	94	138	mA
		CMOS (output enabled)	—	87	127	mA
		Dual CMOS (output enabled)	—	92	141	mA
		Tristate Hi-Z (output disabled)	—	73	112	mA
Temperature Stability		Frequency stability Grade A	–20	—	20	ppm
		Frequency stability Grade B	–10	—	10	ppm
		Frequency stability Grade C	–7	—	7	ppm
Total Stability[1]	F_{STAB}	Frequency stability Grade A	–50	—	50	ppm
		Frequency stability Grade B	–25	—	25	ppm
		Frequency stability Grade C	–20	—	20	ppm
Rise/Fall Time (20% to 80% V_{PP})	T_R/T_F	LVPECL/LVDS/CML	—	—	350	ps
		CMOS / Dual CMOS (C_L = 5 pF)	—	0.5	1.5	ns
		HCSL, F_{CLK} >50 MHz	—	—	550	ps
		HCSL-Fast, F_{CLK} >50 MHz	—	—	275	ps
Duty Cycle	D_C	All formats	45	—	55	%
Powerup Time	t_{OSC}	Time from 0.9 × V_{DD} until output frequency (F_{CLK}) within spec	—	—	10	ms
Powerup VDD Ramp Rate	V_{RAMP}	Fastest VDD rate allowed on startup	—	—	100	V/ms
LVPECL Output Option[2]	V_{OC}	Mid-level	V_{DD} – 1.42	—	V_{DD} – 1.25	V
	V_O	Swing (diff)	1.1	—	1.9	V_{PP}

Parameter	Symbol	Test Condition/Comment	Min	Typ	Max	Unit
LVDS Output Option[3]	V_{OC}	Mid-level (2.5 V, 3.3 V VDD)	1.125	1.20	1.275	V
		Mid-level (1.8 V VDD)	0.8	0.9	1.0	V
	V_O	Swing (F_{CLK} ≤ 1.4 GHz)	0.6	0.7	0.9	V_{PP}
		Swing (F_{CLK} > 1.4 GHz)	0.5	0.7	0.9	V_{PP}
HCSL Output Option[4] HCSL-Fast Output Option[4]	V_{OH}	Output voltage high	660	750	850	mV
	V_{OL}	Output voltage low	–150	0	150	mV
	V_C	Crossing voltage	250	350	550	mV
CML Output Option (AC-Coupled)	V_O	Swing (diff)	0.6	0.8	1.0	V_{PP}
CMOS Output Option	V_{OH}	I_{OH} = 8/6/4 mA for 3.3/2.5/1.8V VDD	0.85 × V_{DD}	—	—	V
	V_{OL}	I_{OL} = 8/6/4 mA for 3.3/2.5/1.8V VDD	—	—	0.15 × V_{DD}	V

Notes:

1. Total Stability includes temperature stability, initial accuracy, load pulling, VDD variation, and aging for 20 yrs at 70 ºC.
2. 50 Ω to V_{DD} – 2.0 V.
3. R_{term} = 100 Ω (differential). Additional DC current from the output driver will flow through the 50Ω resistors, resulting in a shift in common mode voltage. The measurements in this table have accounted for this.
4. 50 Ω to GND.

Table 2.2. I2C Characteristics

V_{DD} = 1.8, 2.5, or 3.3 V ± 5%, T_A = –40 to 85 ºC

Parameter	Symbol	Test Condition/Comment	Min	Typ	Max	Unit
SDA, SCL Input Voltage High	V_{IH}		0.70 x V_{DD}	—	—	V
SDA, SCL Input Voltage Low	V_{IL}		—	—	0.30 x V_{DD}	V
Frequency Reprogramming Resolution	M_{RES}		—	0.026	—	ppb
Frequency Range for Small Frequency Change (Continuous Glitchless Output)		From center frequency	-950	—	+950	ppm
Settling Time for Small Frequency Change		< ±950 ppm from center frequency	—	—	100	µs
Settling Time for Large Frequency Change (Output Squelched during Frequency Transition). Includes 30ms for internal VCO calibration to new frequency (FCAL). See Table 5.6.		> ±950 ppm from center frequency	—	—	40	ms

Note: For best performance, place the Si548 on a dedicated I2C bus, or isolate it via an I2C bus multiplexer to minimize noise.

Table 2.3. Clock Output Phase Jitter and PSNR

V_{DD} = 1.8 V, 2.5 or 3.3 V ± 5%, T_A = –40 to 85 ºC

Parameter	Symbol	Test Condition/Comment	Min	Typ	Max	Unit
Phase Jitter (RMS, 12 kHz - 20MHz)[1] All Differential Formats	ϕ_J	$F_{CLK} \geq 200$ MHz	—	95	150	fs
		100 MHz ≤ F_{CLK} < 200 MHz	—	115	150	fs
Phase Jitter (RMS, 12kHz - 20MHz)[1] CMOS / Dual CMOS Formats	ϕ_J	10 MHz ≤ $F_{CLK} \leq 250$ MHz	—	200	—	fs
Additive Phase Jitter with I2C Lines Active (12 kHz - 20 MHz)	ϕ_J	$F_{CLK} \geq 200$ MHz	—	15	—	fs
Spurs Induced by External Power Supply Noise, 50 mVpp Ripple. LVDS 156.25 MHz Output	PSNR	100 kHz sine wave	—	-83	—	dBc
		200 kHz sine wave	—	-83	—	
		500 kHz sine wave	—	-82	—	
		1 MHz sine wave	—	-85	—	

Note:

1. Guaranteed by characterization. Jitter inclusive of any spurs, I2C lines not active.

Table 2.4. Clock Output Phase Noise (Typical, 50ppm Total Stability Option)

Offset Frequency (f)	156.25 MHz LVDS	200 MHz LVDS	644.53125 MHz LVDS	Unit
100 Hz	–107	–104	–92	dBc/Hz
1 kHz	–130	–126	–117	
10 kHz	–137	–135	–126	
100 kHz	–143	–140	–131	
1 MHz	–149	–147	–138	
10 MHz	–160	–161	–153	
20 MHz	–161	–161	–155	
Offset Frequency (f)	**156.25 MHz LVPECL**	**200 MHz LVPECL**	**644.53125 MHz LVPECL**	**Unit**
100 Hz	–106	–103	–93	dBc/Hz
1 kHz	–129	–127	–118	
10 kHz	–137	–135	–124	
100 kHz	–142	–140	–130	
1 MHz	–149	–147	–137	
10 MHz	–160	–163	–153	
20 MHz	–161	–164	–154	

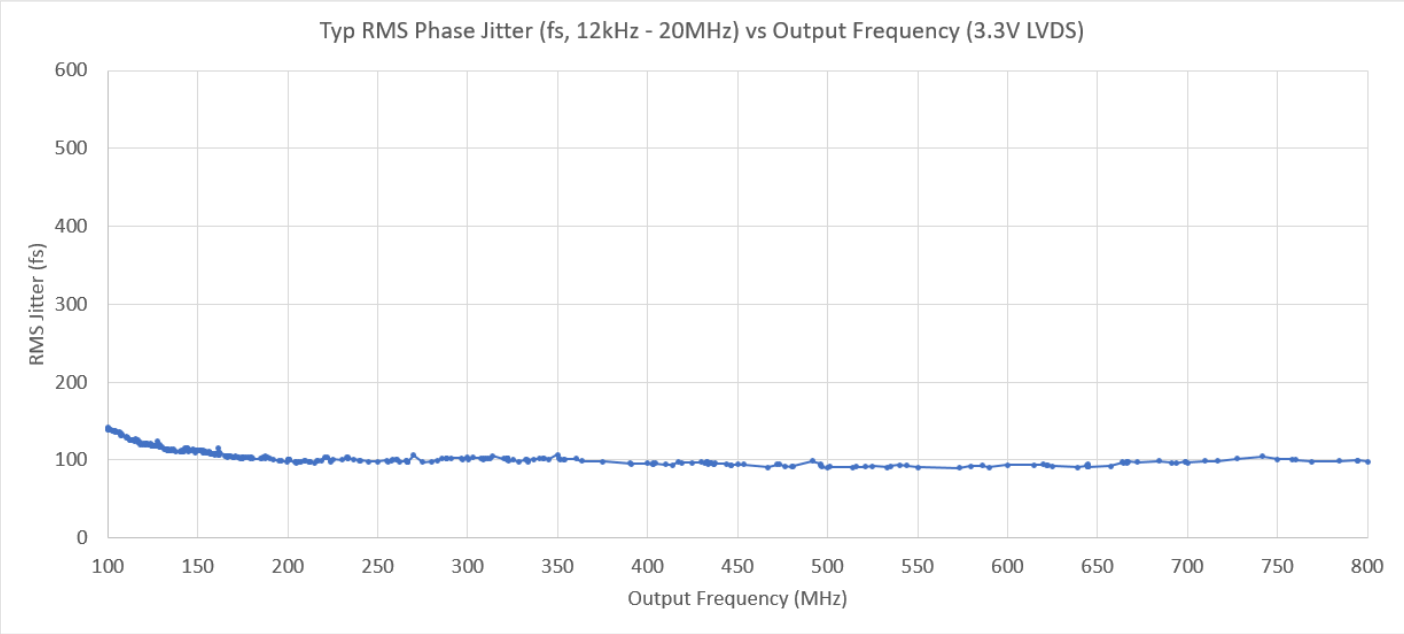

Figure 2.1. Phase Jitter vs. Output Frequency

Phase jitter measured with Agilent E5052 using a differential-to-single ended converter (balun or buffer). Measurements collected for >700 commonly used frequencies. Phase noise plots for specific frequencies are available using our free, online Oscillator Phase Noise Lookup Tool at www.silabs.com/oscillators.

Table 2.5. Environmental Compliance and Package Information

Parameter	Test Condition
Mechanical Shock	MIL-STD-883, Method 2002
Mechanical Vibration	MIL-STD-883, Method 2007
Solderability	MIL-STD-883, Method 2003
Gross and Fine Leak	MIL-STD-883, Method 1014
Resistance to Solder Heat	MIL-STD-883, Method 2036
Moisture Sensitivity Level (MSL): 2.5 x 3.2 package	2
Contact Pads: 2.5x3.2 packages	Au/Pd/Ni (0.03 - 0.12 µm / 0.1 - 0.2 µm / 3.0 - 8.0 µm)

Note:

1. For additional product information not listed in the data sheet (e.g. RoHS Certifications, MDDS data, qualification data, REACH Declarations, ECCN codes, etc.), refer to our "Corporate Request For Information" portal found here: www.silabs.com/support/quality/Pages/RoHSInformation.aspx.

Table 2.6. Thermal Conditions

Max Junction Temperature = 125 ºC

Package	Parameter	Symbol	Test Condition	Value	Unit
2.5 x 3.2 mm 6-pin DFN	Thermal Resistance Junction to Ambient	Θ_{JA}	Still Air, 85 ºC	80	ºC/W
	Thermal Parameter Junction to Board	Ψ_{JB}	Still Air, 85 ºC	39	ºC/W
	Thermal Parameter Junction to Top Center	Ψ_{JT}	Still Air, 85 ºC	17	ºC/W

Note:

1. Based on PCB Dimensions: 4.5" x 7", PCB Thickness: 1.6 mm, Number of Cu Layers: 4.

Table 2.7. Absolute Maximum Ratings[1]

Parameter	Symbol	Rating	Unit
Maximum Operating Temp.	T_{AMAX}	95	ºC
Storage Temperature	T_S	–55 to 125	ºC
Supply Voltage	V_{DD}	–0.5 to 3.8	ºC
Input Voltage	V_{IN}	–0.5 to V_{DD} + 0.3	V
ESD HBM (JESD22-A114)	HBM	2.0	kV
Solder Temperature[2]	T_{PEAK}	260	ºC
Solder Time at T_{PEAK}[2]	T_P	20–40	sec

Notes:

1. Stresses beyond those listed in this table may cause permanent damage to the device. Functional operation specification compliance is not implied at these conditions. Exposure to maximum rating conditions for extended periods may affect device reliability.
2. The device is compliant with JEDEC J-STD-020.

3. Dual CMOS Buffer

Dual CMOS output format ordering options support either complementary or in-phase signals for two identical frequency outputs. This feature enables replacement of multiple XOs with a single Si548 device.

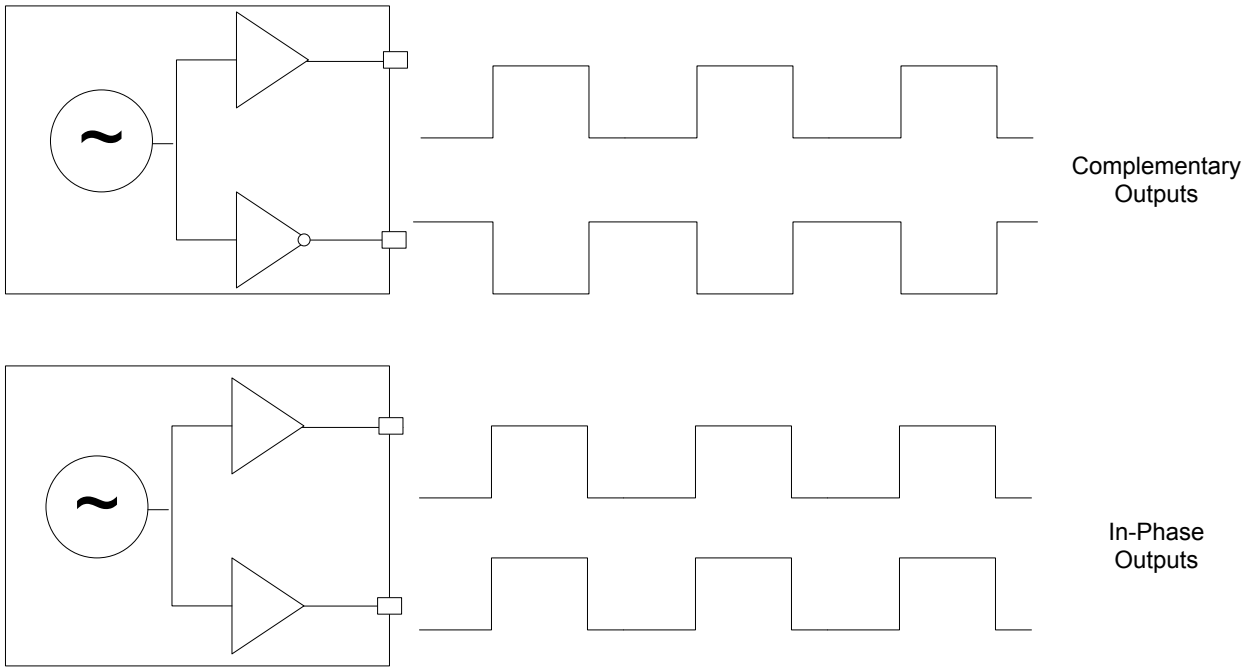

Figure 3.1. Integrated 1:2 CMOS Buffer Supports Complementary or In-Phase Outputs

4. Recommended Output Terminations

The output drivers support both AC-coupled and DC-coupled terminations as shown in figures below.

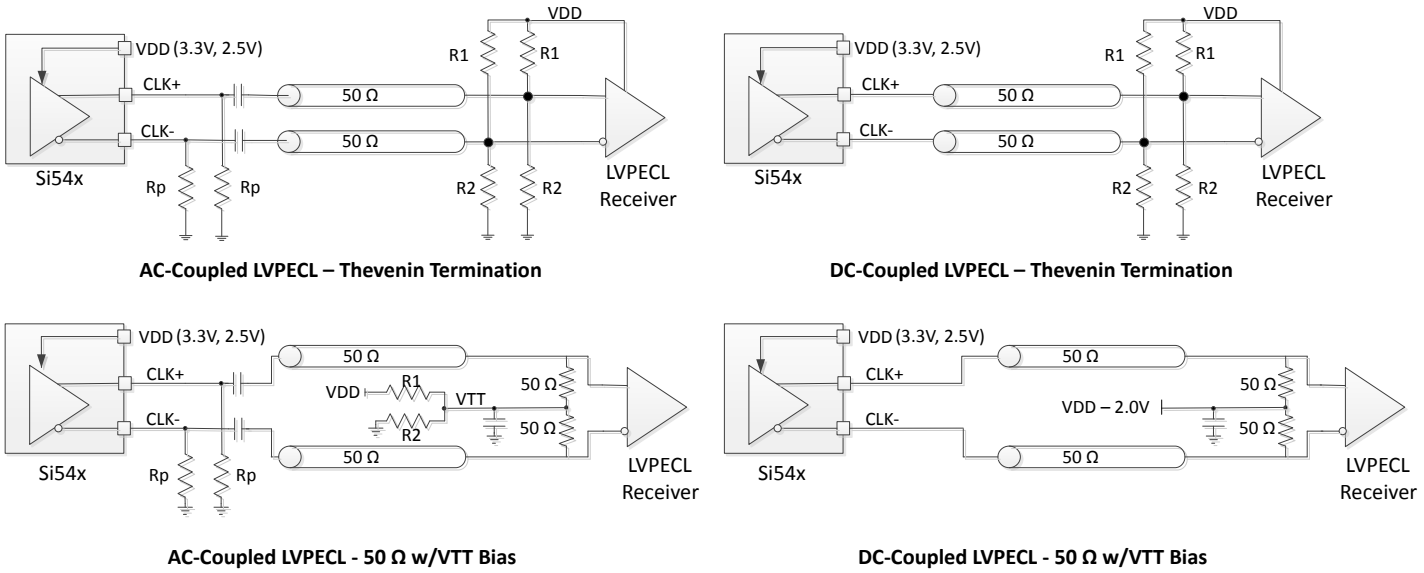

Figure 4.1. LVPECL Output Terminations

AC Coupled LVPECL Termination Resistor Values			
VDD	R1	R2	Rp
3.3 V	82.5 Ω	127 Ω	130 Ω
2.5 V	62.5 Ω	250 Ω	90 Ω

DC Coupled LVPECL Termination Resistor Values		
VDD	R1	R2
3.3 V	127 Ω	82.5 Ω
2.5 V	250 Ω	62.5 Ω

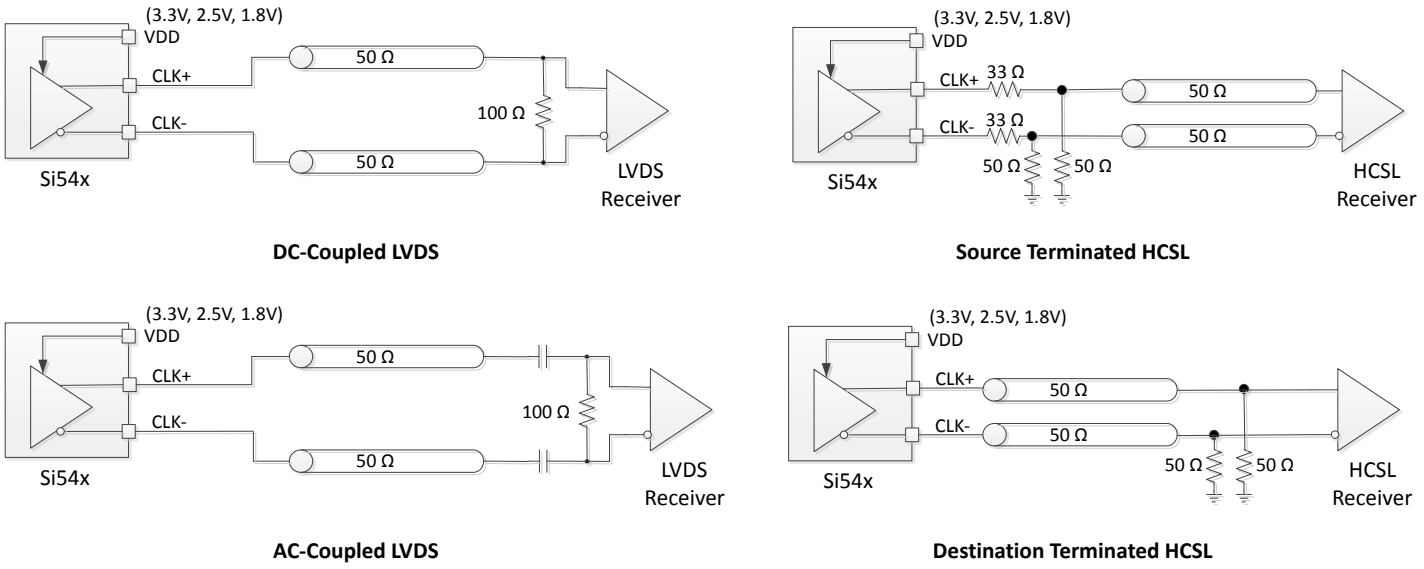

Figure 4.2. LVDS and HCSL Output Terminations

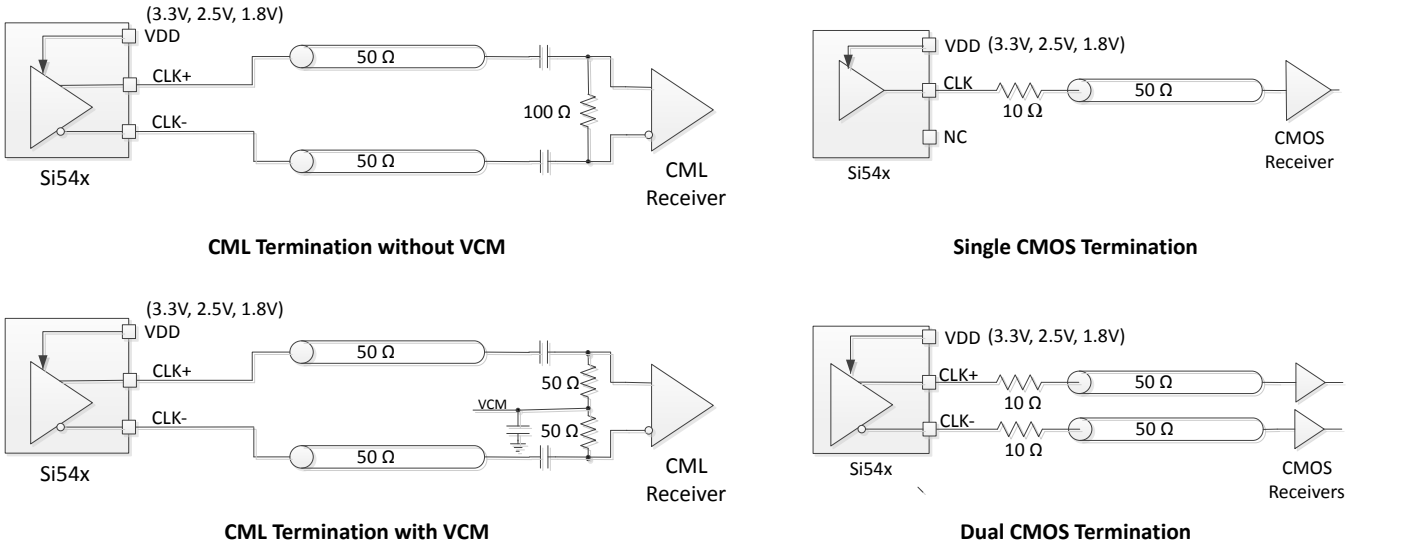

Figure 4.3. CML and CMOS Output Terminations

5. Configuring Si548 Output Frequency via I2C

The Si548 oscillator device contains a fixed frequency crystal and frequency synthesis IC using Silicon Labs patented DSPLL™ technology, all enclosed in a standard hermetically sealed crystal oscillator (XO) package. The internal crystal provides the reference frequency used by the DSPLL frequency synthesis IC. The output frequency of the Si548 oscillator device can be dynamically set via I2C register settings in the DSPLL frequency synthesis IC. DSPLL technology provides unmatched frequency flexibility with superior output jitter/phase noise performance and part per trillion frequency accuracy. This document describes how to calculate the required Si548 register values used to set device output frequency, and how to load these values into the Si548 device.

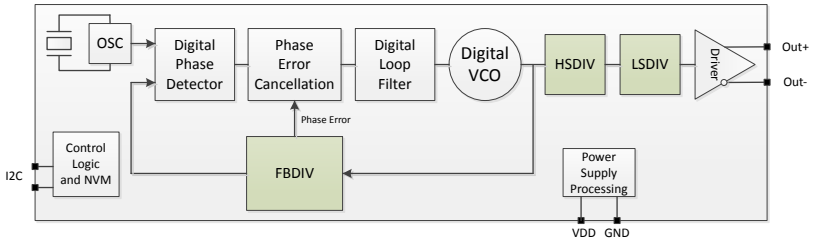

Figure 5.1. Si548 Block Diagram

The figure above is a simplified high-level block diagram of the Si548 oscillator device. The output frequency is set by a combination of three divider blocks highlighted in the above block diagram.

1. FBDIV - DSPLLTM Feedback Divider used to set Digital VCO frequency
2. HSDIV - High-Speed Output Divider
3. LSDIV - Low-Speed Output Divider

The final device output frequency is based on the digital VCO frequency divided by the product of HSDIV and LSDIV divider settings. The limits of each of these internal blocks (both digital VCO and dividers) determines the valid operating frequency range of the device.

The FBDIV divider, is a fractional fixed-point divider with a total length of 43 bits consisting of an 11-bit integer field (FBINT) and a 32 bit fractional field (FBFRAC) where total FBDIV = [FBINT].[FBFRAC] with an implied decimal point as shown. This bit format is known as an 11.32 fixed point format where the integer portion is 11 bits and fractional portion is 32 bits, for a total of 43 bits.

The HSDIV divider is an integer divider, 11 bits in length, containing a binary divider value. One noteworthy feature of the HSDIV divider is a special duty cycle correction circuit that allows **odd** divide ratios of lower divider values (5-33 only) with 50% duty cycle output. This feature is useful when LSDIV divide ratio is set to 1.

The LSDIV divider performs power-of-2 divides ranging from divide by 1 (20) to divide by 32 (25). The register controlling the LSDIV divider is 3 bits in length, holding the power-of-2 divide ratio (divider exponent). For example, if LSDIV register = 3 the LSDIV divide ratio is 23 = 8. Values greater than 5 (i.e. LSDIV register = 6 or 7) still map into a divide by 32.

The tables below summarize the divider limits for LSDIV, HSDIV, FBDIV. These limits and restrictions **must** be observed when deriving divider register values, as will be explained in later sections.

Table 5.1. Si548 Divider Range Limits

Divider	Upper Limit	Lower Limit
HSDIV[10:0] (unsigned)	2046	5
LSDIV[2:0] [1] (unsigned)	32 (2^5)	1 (2^0)
FBDIV[42:0] hex (unsigned)	7FDFFFFFFF	03C00000000
FBDIV[42:0] int.frac (unsigned)	2045.99999999976	60.0

Note:
1. LSDIV is power of 2 divider. See LSDIV table below for actual divide ratio based on LSDIV register value.

Table 5.2. Additional LSDIV and HSDIV Divider Restrictions

LSDIV Register Value	Divide Ratio	HSDIV Value Restrictions
0	1	5-33 even or odd values [1], 34-2046 **even values only**
1	2	
2	4	
3	8	
4	16	
5	32	
6	32	
7	32	

Note:

1. HSDIV can implement low value (5-33) **odd** divide ratios while providing a 50% duty cycle output due to special duty cycle correction circuit.

Note that all divider values (FBDIV, HSDIV, LSDIV) are **unsigned** and contain only positive values.

The Si548 high-performance oscillator family has three different speed grade offerings, each covering a specific frequency range. The table below outlines the output frequency range coverage by each speed grade, the corresponding min and max VCO frequency for that speed grade, and the nominal crystal frequency. The information in the table below is needed when calculating divider settings for a given device, speed grade, and output frequency.

Table 5.3. Si548 Speed Grades, Crystal Frequency, and VCO Range Limits

Device	Speed Grade	Xtal freq (MHz)	Min Output Freq (MHz)	Max Output Freq (MHz)	Min Fvco (GHz)	Max Fvco (GHz)
Si548	A	152.6	0.2	1500	10.8	12.511886114
	B	152.6	0.2	800	10.8	12.206718160
	C	152.6	0.2	325	10.8	12.206718160

5.1 Output Frequency Equations

The basic equations used to derive the output frequency are given below and can be easily inferred from the device block diagram in Figure 5.2 Si548 Frequency Definition Block Diagram on page 13. Equation 1 is the relationship between the output frequency (Fout), and the VCO frequency (Fvco) and total output divider ratio (HSDIV * LSDIV). Equation 2 is the relationship between the VCO frequency (Fvco), the fixed crystal oscillator frequency (Fosc), and the feedback divider (FBDIV).

$$Fout = Fvco / (HSDIV \times LSDIV)$$

Equation 1

$$Fvco = (Fosc \times FBDIV)$$

Equation 2

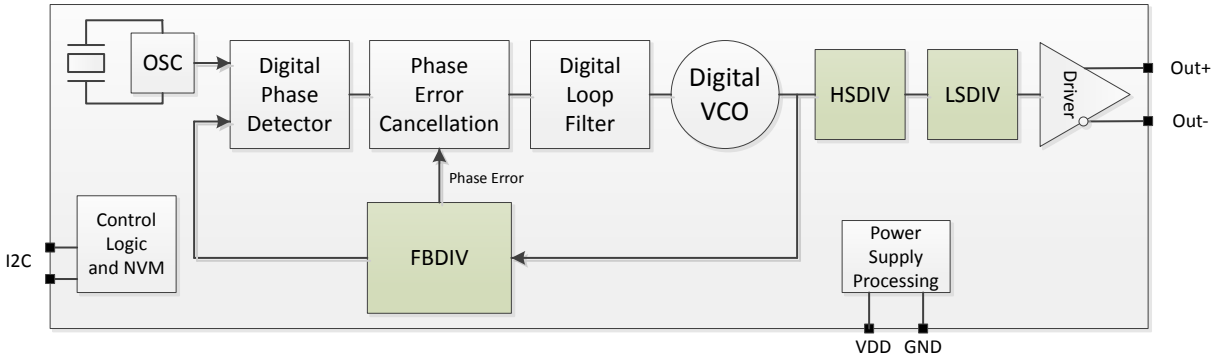

Figure 5.2. Si548 Frequency Definition Block Diagram

Equation 3a is a rearranged Equation 1 to solve for the total output divider (HSDIV *LSDIV) given Fout and Fvco. Equation 3b is rearranged again solving for Fvco given Fout and (HSDIV * LSDIV).

$$(HSDIV \times LSDIV) = Fvco / Fout$$

Equation 3a

$$Fvco = Fout \times (HSDIV \times LSDIV)$$

Equation 3b

Equation 4 is a rearranged Equation 2 to now solve for FBDIV given Fvco and Fosc.

$$FBDIV = Fvco / Fosc$$

Equation 4

Equations 3a, 3b, and 4 will be used in the process of deriving the required divider values to provide a desired output frequency. The basic process is outlined below.

5.2 General Process Steps for Divider Calculation

1. Estimate a theoretical total output divider value (HSDIV * LSDIV) based on desired Fout while targeting the minimum valid Fvco frequency using Eqn. 3a and Table 5.3 Si548 Speed Grades, Crystal Frequency, and VCO Range Limits on page 12. Use floating point calculations for this step.
   - Result: Floating point value of total (HSDIV * LSDIV).
2. Derive a valid LSDIV divider value based on LSDIV and HSDIV divider limitations **using the lowest possible value for LSDIV**. For example, if (HSDIV * LSDIV) = 8.22, use LSDIV =1 and HSDIV = 8.22 versus LSDIV = 2 and HSDIV = 4.11.
   - Result: Valid LSDIV value.
3. Using LSDIV value from #2 above, find nearest valid **integer** HSDIV divider value resulting in Fvco being **equal to or greater than Fvco min**, which observing all HSDIV limitations. Use Eqns. 3a/3b as necessary.
   - Result: Valid HSDIV value.
4. With valid integer HSDIV and LSDIV values, calculate the required Fvco frequency with Eqn. 3b. (Fvco must remain in valid range per Table 5.3 Si548 Speed Grades, Crystal Frequency, and VCO Range Limits on page 12.)
   - Result: Valid VCO frequency.
5. With the derived valid Fvco frequency, use Eqn 4 to calculate required FBDIV based on device specific Fosc frequency from Table 5.3 Si548 Speed Grades, Crystal Frequency, and VCO Range Limits on page 12.
   - Result: Valid FBDIV value
6. At this point all FBDIV, HSDIV and LSDIV values required to generate the desired output frequency have been calculated. These three divider values must be now be appropriately formatted to fit the register format expected by the device. This is described in a later section.

5.3 Example: Deriving Si548 Divider Settings for 156.75 MHz Output

The general process of deriving divider values for a specific output frequency is outlined in the previous section and now will be used in this example. To reiterate, all calculations must be done while observing divider limits and valid VCO frequency range limits for your device. In this example, the device is Si548 and with a desired output frequency of 156.75 MHz, the speed grade required will be “C” or better. (One important note: All divider and register settings derived for any speed grade will work without modification for all **faster** speed grades on the same base part number device.)

Example VB code that implements the following divider calculation process is given in 5.8 Si548 Frequency Planner VB Code and can be used for implementing any supported output frequency.

Step 1: Find the valid theoretical lower limit of the total output divider (HSDIV*LSDIV) based on the desired output frequency and lowest valid VCO frequency. This will bias the divider solution to the lowest possible VCO frequency since this will provide the best performance solution.

Given the valid Si548 VCO range is 10.8000 GHz to 12.1097 GHz, the minimum theoretical values for (HSDIV * LSDIV) for the example 156.75 MHz output frequency are given in Equation 3:

Minimum (HSDIV*LSDIV) = (10.8000 GHz / 156.75 MHz) = **68.89952…**

Step 2: Find valid LSDIV divisor value given minimum (HSDIV*LSDIV) from step 1. For best performance, preference should be given to implementation of the total output divider (HSDIV*LSDIV) using HSDIV with LSDIV divide ratio = 1, if possible. Use LSDIV divide ratios > 1 only if HSDIV alone cannot implement the required output divider. Since the total (HSDIV*LSDIV) value of 68.8995… is less than the HSDIV maximum divider value of 2046, the LSDIV divide **ratio** value will be 1, which corresponds to a LSDIV register setting of 0, since the LSDIV divider can only be a power of 2 value (see Table 5.2 Additional LSDIV and HSDIV Divider Restrictions on page 12 for valid LSDIV settings).

LSDIV divide ratio = 1, therefore **LSDIV register value = 0**

Step 3: Find HSDIV divisor value. Given LSDIV = 1, HSDIV must implement 68.8995… or greater. Since HSDIV is an integer divider, the next greatest integer is 69. But, checking valid HSDIV values when LSDIV divide ratio = 1, we see 69 is NOT valid since it is greater than 33 and an odd value. This means the next greater integer value must be used, which is 70 (now even value). Note that 68 would **not** be valid since 68 is less than 68.8995… and would result in a VCO frequency below the lower VCO frequency limit.

HSDIV divide ratio = 70, which gives **HSDIV register value = 70 decimal (or hex value = 0x46)**

Step 4: Calculate a valid VCO frequency and corresponding floating point FBDIV value. Given the calculated output divider value (HSDIV*LSDIV) = 70, the VCO frequency must be set to (156.75 MHz * 70) = **10.9725 GHz**. Note that 10.9725 GHz is indeed within the valid VCO frequency range per Table 5.3 Si548 Speed Grades, Crystal Frequency, and VCO Range Limits on page 12.

Fvco = **10.9725 GHz**

Step 5: Calculate the FBDIV value necessary to provide a 10.9725 GHz Fvco using a 152.6 MHz crystal as reference (Si548 device). The floating point FBDIV value required to attain 10.9725 GHz with a 152.6 MHz crystal reference can be calculated as follows:

FBDIV (float) = 10.9725 GHz / 152.6 MHz = **71.9036697247707**

Step 6: Format each divider value into the required register format. LSDIV and HSDIV are simply binary values and can be directly used. FBDIV must first be put into 11.32 fixed point format. Converting the floating point FBDIV value into the 11.32 fixed point hex value required by the Si548 is done as follows:

Integer value = **71** decimal. Convert **71** to 11 bit hex = **0x047**. This is FBINT.

Fractional value = **0.9036697247707**. Multiply fractional value by 2^32 = 3881231914.2752. Now extract only the **integer** part of the result which is 3881231914. Convert 3881231914 to 32 bit hex = **0xE756E62A .** This is FBFRAC.

The resulting 11.32 fixed point hex number is therefore:

FBDIV = FBINT.FBFRAC = **0x047E756E62A**

At this point we have calculated all the required divider values. The table below summarizes the resulting divider values for implementing a 156.75 MHz output clock on the Si548.

Table 5.4. Divider Register Values for Si548 Configured for 156.75 MHz Output Clock

Divider Register	Decimal Value	Hex Value	Reg Length (bits)
LSDIV	0	0x0	3
HSDIV	70	0x046	11
FBDIV	71.9036697247707	0x047E756E62A	43 (11+32)

5.4 Mapping Divider Settings into Register Values

For the previous 156.75 MHz example, the divider value to register mapping is shown in the table below. Note that Register 24 is a packed register and contains bits from both LSDIV and HSDIV registers as follows: LSDIV[2:0] maps into Reg24[6:4] and HSDIV[10:8] maps into Reg24[2:0]. Note that bits Reg24[7] and Reg24[3] are not used and indicated with 'x' in the RegName field below. See also the Register Map Reference section for specific bit positioning within registers.

Table 5.5. Si548 Divider Register Values for 156.75 MHz Output Clock Configuration

Register (Decimal)	Hex Value	Reg Name
23	46	HSDIV[7:0]
24	00	x:LSDIV[2:0]:x:HSDIV[10:8]
26	2A	FBDIV[7:0]
27	E6	FBDIV[15:8]
28	56	FBDIV[23:16]
29	E7	FBDIV[31:24]
30	47	FBDIV[39:32]
31	00	FBDIV[42:40]

5.5 I2C Register Write Procedure to Set Output Frequency

After the frequency setting registers (Reg 23-Reg31) are calculated, there is a procedure that must be followed involving other specific control registers for the device to properly use the new frequency setting registers. Simply writing Reg23-Reg31 is not enough. The following procedure must be performed as shown to properly configure the Si548 for the desired output frequency. In other words, all the following register writes must be done, and **in the exact sequence shown**.

This programming sequence consists of three distinct phases.

1. Writing to specific registers to get the device ready to be updated.
2. Writing the calculated frequency (divider) settings for the desired output frequency.
3. Writing to specific registers necessary to start-up the device after divider registers have been updated. The new output frequency will appear on output.

The divider values shown in the table below are for the previously described Si548 example for an output frequency of 156.75 MHz (for other frequencies, replace the divider values in registers 23-31 with values specific to your frequency requirements).

Table 5.6. Si548 Register Write Sequence to Set Output Frequency

Register (decimal)	Write Data (hex)	Description	Purpose
255	0x00	Set page register to point to page 0	Get Device Ready for Update
69	0x00	Disable FCAL override (to allow FCAL for this Freq Update)	
17	0x00	Synchronously disable output	
23	0x46	HSDIV[7:0]	Update Dividers
24	0x00	LSDIV[2:0]:HSDIV[10:8]	
26	0x2A	FBDIV[7:0]	
27	0xE6	FBDIV[15:8]	
28	0x56	FBDIV[23:16]	
29	0xE7	FBDIV[31:24]	
30	0x47	FBDIV[39:32]	
31	0x00	FBDIV[42:40]	
7	0x08	Start FCAL using new divider values	Startup Device
—	—	Internal FCAL VCO calibration (30 ms delay)	
17	0x01	Synchronously enable output	

5.6 Digitally Controlled Oscillator – ADPLL: Small, Fast Frequency Changes

The Si548 can make small, fast frequency adjustments over a range of +/- 950 ppm (parts-per-million) around the device output frequency (set as described in previous sections). This mode is typically used in applications requiring a digitally controlled oscillator (DCO) for digital PLL or other types of frequency control loops. We refer to this type of application as an all-digital PLL or ADPLL.

The ADPLL mode uses a single 24 bit register, ADPLL_DELTA_M[23:0], to add an offset to the VCO frequency to affect the small frequency change. This offset is added in a synchronous fashion to prevent frequency discontinuities and can be updated as fast as the max I2C bus speed of 1 MHz will allow. The frequency offset can be positive or negative over a range of -950 ppm to +950 ppm with 0.0001164 ppm resolution.

The equation for this frequency change is simply,

$$ADPLL_DELTA_M[23:0] = \Delta\ FoutPPM / 0.0001164$$

Where $\Delta\ Fout_{PPM}$ is the desired ppm change in output frequency, ADPLL_DELTA_M[23:0] is a two's complement 24 bit value, and 0.0001164 is a constant per-bit ppm value. The 24 bit ADPLL_DELTA_M[23:0] value is written into three sequential 8 bit registers in LSByte to MSByte order via I2C. Upon writing the MSByte, the frequency change takes effect. Below is an example VB to implement this feature. (Note that writing ADPLL_DELTA_M[23:0] = 0x000 will result in no frequency offset and return to the nominal output frequency.)

VB Code example for ADPLL (small frequency change) calculation and operation:

```
nAddr = Device I2C address
PPM_Delta = desired PPM frequency shift

    Function Set_ADPLL(ByVal nAddr As UInteger, ByVal PPM_Delta As Double) As Integer
        Dim ADPLL_PPM_StepSize As Double = 0.0001164
        Dim ADPLL_Delta_M As Integer
        Dim Reg231 As UInteger = 0
        Dim Reg232 As UInteger = 0
        Dim Reg233 As UInteger = 0
        Dim ReturnCode As Integer = 0  '1=OK, -1 PPM requested is out of bounds
        If (PPM_Delta <= 950 And PPM_Delta >= -950) Then
            ADPLL_Delta_M = (PPM_Delta / ADPLL_PPM_StepSize)
            Reg231 = (ADPLL_Delta_M And &HFF)
            Reg232 = (ADPLL_Delta_M >> 8) And &HFF
            Reg233 = (ADPLL_Delta_M >> 16) And &HFF
            I2C_Write(nAddr, 0, 231, Reg231)    'write “Reg231” value to register 231 at nAddr, page 0 (LSByte)
            I2C_Write(nAddr, 0, 232, Reg232)    'write “Reg232” value to register 232 at nAddr, page 0
               I2C_Write(nAddr, 0, 233, Reg233)      'write “Reg233” value to register 233 at nAddr, page 0
(MSByte)
            ReturnCode = 1
        Else
            ReturnCode = -1
        End If
        Return (ReturnCode)
    End Function
```

5.7 Register Map Reference

Table 5.7. Register Map Reference Summary

Register (decimal)	Register Bit								Type	Reset Value
	7	6	5	4	3	2	1	0		
0	DEVICE_TYPE[7:0]								R	0x30
7	RESET	<Reserved> = 3'b000			MS_ICAL2	<Reserved> = 3'b000			R/W	0x00
17	<Unused>							ODC_OE	R/W	0x01
23	HSDIV[7:0]								R/W	0x54
24	<Unused>	LSDIV[2:0]			<Unused>	HSDIV[10:8]			R/W	0x00
26	FBDIV[7:0]								R/W	0x00
27	FBDIV[15:8]								R/W	0x00
28	FBDIV[23:16]								R/W	0x00
29	FBDIV[31:24]								R/W	0x00
30	FBDIV[39:32]								R/W	0x64
31	<Unused>					FBDIV[42:40]			R/W	0x00
69	FCAL_OVR	<Reserved> = 7'b0000001							R/W	0x01
231	ADPLL_DELTA_M[7:0]								R/W	0x00
232	ADPLL_DELTA_M[15:8]								R/W	0x00
233	ADPLL_DELTA_M[23:16]								R/W	0x00
255	<Reserved> = 6'b000000						PAGE[1:0]		R/W	0x00

Table 5.8. Register Bit Field Summary

Register Bit Field Name	Bit Field (#bits)	Register	Description
DEVICE_TYPE[7:0]	8	0	Read only value of 48 (dec) which represents the device type (Si548).
RESET	1	7	Set to 1 to reset device. Self clearing.
MS_ICAL2	1	7	Set to 1 to initiate FCAL. Self clearing.
ODC_OE	1	17	Set to 0 to disable the output clock, or set to 1 to enable the output clock.
HSDIV[10:0]	11	23-24	HSDIV is High-speed output divider value in unsigned 11-bit binary format. Valid divide values are from 5 to 2046, with values of 5-33 even or odd, and values 34-2046 restricted to even values only.
LSDIV[2:0]	3	24	LSDIV sets a power-of-2 output divider. Values of 0,1,2,3,4,5,6,7 result in divide ratio of 1,2,4,8,16,32,32,32 respectively. Note that a value of 0 (divide-by-1) essentially bypasses this divider.

Register Bit Field Name	Bit Field (#bits)	Register	Description
FBDIV[42:0]	43	26-31	The main DSPLL system feedback divide (FBDIV) value for Si54x. This 43 bit value is composed of an unsigned 11-bit integer value (FBDIV[42:32]) concatenated with a 32-bit fractional value (FBDIV[31:0]), for an 11.32 fixed point binary format. The valid range of the 11-bit integer part is from 60 to 2045
FCAL_OVR	1	69	FCAL Override: If set to 1, FCAL is by-passed. Clear to 0 to allow FCAL.
ADPLL_DELTA_M[23:0]	24	231-233	Digital word to effect small frequency shifts to base frequency. Value is 24 bit 2's complement causing a 0.0001164 ppm per bit shift in frequency. Positive values = positive freq shift, negative values = negative freq shift. Valid range is -8161513 to +8161512, representing a max PPM shift range of -950 ppm to +950 ppm, with 0 value representing 0 PPM shift. Writing a new ADPLL_DELTA_M value will take effect upon writing to the MSByte (Register 233). Therefore, value updates should follow the sequence of writing in register order Reg 231...Reg 232...Reg 233.
PAGE[1:0]	2	255	Sets which page of registers the I2C port is reading/writing. The size of a page is 256 bytes which is the addressable range of an I2C "**set address**" command. The value of PAGE is multiplied by 256 and added to what "**set address**" has set. Physically, the 2 PAGE bits become bits [9:8] of the device's internal register map address. This mechanism allows for more than 256 registers to be addressed within the 8 bit I2C "**set address**" limitation.

5.8 Si548 Frequency Planner VB Code

```
Module Main
    '
    ' Si54x Frequency Planner Code
    '
    '
    'Set Target device type, Speed grade, and desired output frequency
    '
    Public Device As Integer = 548     ' 544 or 548 only
    Public SpeedGrade As String = "C"  'Can only be "A" or "B" or "C"
    Public Output_Freq As Double = 312500000.0  'Output frequency in Hz (initially set to 312.5 MHz)

    'Set in 'SetLimits" function...
    Public Fvco_max As Double  'Fvco Max per Table 5.3
    Public Fvco_min As Double  'Fvco Min per Table 5.3
    Public Xtal_freq As Double 'Xtal_Freq per Table 5.3
    Public Fout_min As Double  'Minimum output frequency
    Public Fout_max As Double  'Maximum output frequency

    Sub Main()
        '
        ' Device divider limits (see Tables 5.1 & 5.2)
        '
        Dim HSDIV_UpperLimit As Integer = 2046
        Dim HSDIV_LowerLimit As Integer = 5
        Dim HSDIV_LowerLimit_Odd As Integer = 5     'min count for odd HSDIV divisor
        Dim HSDIV_UpperLimit_Odd As Integer = 33    'max count for odd HSDIV divisor
        Dim LSDIV_UpperLimit As Integer = 5
        Dim LSDIV_LowerLimit As Integer = 0
        Dim FBDIV_UpperLimit As Double = 2045 + ((2 ^ 32 - 1) / (2 ^ 32))
        Dim FBDIV_LowerLimit As Double = 60.0
        '
        ' Working variables
        '
        Dim Min_HSLS_Div As Double
        Dim LSDIV_Div As Double     ' actual LSDIV divide ratio
        Dim LSDIV_Reg As Integer    ' LSDIV as encoded in power of 2 for device register use
        Dim HSDIV As Double
        Dim FBDIV As Double
        Dim Fvco As Double
        Dim FBDIV_Int As UInteger
        Dim FBDIV_Frac As UInteger
        Dim Reg23 As UInteger = 0    'HSDIV[7:0]
        Dim Reg24 As UInteger = 0    'OD_LSDIV[2:0],HSDIV[10:8]   (*2^4,/2^8)
        Dim Reg26 As UInteger = 0    'FBDIV[7:0]
        Dim Reg27 As UInteger = 0    'FBDIV[15:8]   (/2^8)
        Dim Reg28 As UInteger = 0    'FBDIV[23:16]  (/2^16)
        Dim Reg29 As UInteger = 0    'FBDIV[31:24]  (/2^24)
        Dim Reg30 As UInteger = 0    'FBDIV[39:32]  (/2^32)
        Dim Reg31 As UInteger = 0    'FBDIV[42:40]  (/2^40)

        '
        ' Set device limits based on device type and speed grade.
        ' (Checks if desired output frequency is valid based on device and speed grade)
        '
        If SetLimits(Device, SpeedGrade, Output_Freq) = 0 Then
            '
            ' If limits are set and output frequency is valid, calculate frequency plan...

            '*********************************************************************************************
            '  Step 1: Find theoretical HSDIV *LSDIV value based on lowest valid VCO frequency...
              '           (Assumes "Output_Freq" has been tested and is in valid range for the device grade
according to Table 5.3)
            '
              Min_HSLS_Div = Fvco_min / Output_Freq      ' Floating point HS*LS div value. Remember to first
bounds check Output_Freq!

            'Step 2: Find LSDIV divisor value given Min_HSLS_Div value
            '
               LSDIV_Div = Math.Ceiling(Min_HSLS_Div / HSDIV_UpperLimit)  ' Divisor value of LSDIV, NOT yet
encoded as power of 2
```

```
            If (LSDIV_Div > 32) Then LSDIV_Div = 32 ' clip at 32 (max LSDIV divisor)
            '
              'Encode LSDIV divisor value into next nearest 'power of 2' value if not already. This will be
LSDIV_Reg
            '
            LSDIV_Reg = Math.Ceiling(Math.Log(LSDIV_Div, 2))        ' LSDIV_Reg now encoded as proper power of
2. Will range from 0 to 5.

            ' Adjust LSDIV_Div (holder of divisor) based on rounded power of 2 value in LSDIV_Reg
            LSDIV_Div = 2 ^ LSDIV_Reg 'LSDIV_Div divisor now synchronized to actual LSDIV_Reg.
            '
            'Step 3: Find HSDIV divisor value using known LSDIV divisor
            '
            HSDIV = Math.Ceiling(Min_HSLS_Div / LSDIV_Div)
            If ((HSDIV >= HSDIV_LowerLimit_Odd) And (HSDIV <= HSDIV_UpperLimit_Odd)) Then
                HSDIV = HSDIV  ' Leaves HSDIV as even or odd only if HSDIV is from 5 to 33.
            Else
                If ((HSDIV Mod 2) <> 0) Then    'If HSDIV is an odd value...
                    HSDIV = HSDIV + 1           '...make it even by rounding up
                End If                          'If already even, leave it alone
            End If
            '
            ' Step 4: Now calculate Fvco and FBDIV
            '
            Fvco = (HSDIV * LSDIV_Div * Output_Freq)    'Calculate Fvco based on valid HSDIV,LSDIV, and Fout
            FBDIV = Fvco / Xtal_freq                    'Finally, calculate FBDIV based on xtal freq

'Calculate 11.32 fixed point FBDIV value (MCTL_M)
'Extract Integer part
FBDIV_Int = Int(FBDIV)
'Extract fractional part
FBDIV = (FBDIV - FBDIV_Int)
FBDIV = FBDIV * (2 ^ 32)
FBDIV_Frac = Int(FBDIV)
'
'Generate Register values based on LSDIV, HSDIV, and FBDIV (MCTL_M)
'
Reg23 = (HSDIV And &HFF)
Reg24 = ((HSDIV >> 8) And &H7) Or ((LSDIV_Reg And &H7) << 4)

Reg26 = (FBDIV_Frac And &HFF)
Reg27 = (FBDIV_Frac >> 8) And &HFF
Reg28 = (FBDIV_Frac >> 16) And &HFF
Reg29 = (FBDIV_Frac >> 24) And &HFF
Reg30 = (FBDIV_Int) And &HFF
Reg31 = (FBDIV_Int >> 8) And &H7

            '*********************************************************************
        Else
            Console.WriteLine("*** Device invalid or Device limits exceeded. Frequency plan not calculated.")
        End If

    End Sub
    '
    ' Sets device limits according to Table 5.3
    '   Returns 0 if limits are set and output frequency is valid
    '   Returns -1 if limits not found or output frequency is invalid
     Function SetLimits(ByVal Device As Integer, ByVal SpeedGrade As String, ByVal Output_Freq As Double) As
Integer
        Dim ReturnCode As Integer
        ReturnCode = 0
        If Device = 544 Then
            Xtal_freq = 55050000.0
            If SpeedGrade = "A" Then
                Fvco_min = 10800000000.0
                Fvco_max = 12550082103.0
                Fout_min = 200000.0
                Fout_max = 1500000000.0
                If ((Output_Freq < Fout_min) Or (Output_Freq > Fout_max)) Then
                    ReturnCode = -1
                End If
            ElseIf SpeedGrade = "B" Then
                Fvco_min = 10800000000.0
```

```
                Fvco_max = 12109728345.0
                Fout_min = 200000.0
                Fout_max = 800000000.0
                If ((Output_Freq < Fout_min) Or (Output_Freq > Fout_max)) Then
                    ReturnCode = -1
                End If
            ElseIf SpeedGrade = "C" Then
                Fvco_min = 10800000000.0
                Fvco_max = 12109728345.0
                Fout_min = 200000.0
                Fout_max = 325000000.0
                If ((Output_Freq < Fout_min) Or (Output_Freq > Fout_max)) Then
                    ReturnCode = -1
                End If
            Else
                ReturnCode = -1
            End If
        ElseIf Device = 548 Then
            Xtal_freq = 152600000.0
            If SpeedGrade = "A" Then
                Fvco_min = 10800000000.0
                Fvco_max = 12511886114.0
                Fout_min = 200000.0
                Fout_max = 1500000000.0
                If ((Output_Freq < Fout_min) Or (Output_Freq > Fout_max)) Then
                    ReturnCode = -1
                End If
            ElseIf SpeedGrade = "B" Then
                Fvco_min = 10800000000.0
                Fvco_max = 12206718160.0
                Fout_min = 200000.0
                Fout_max = 800000000.0
                If ((Output_Freq < Fout_min) Or (Output_Freq > Fout_max)) Then
                    ReturnCode = -1
                End If
            ElseIf SpeedGrade = "C" Then
                Fvco_min = 10800000000.0
                Fvco_max = 12206718160.0
                Fout_min = 200000.0
                Fout_max = 325000000.0
                If ((Output_Freq < Fout_min) Or (Output_Freq > Fout_max)) Then
                    ReturnCode = -1
                End If
            Else
                ReturnCode = -1
            End If
        Else
            ReturnCode = -1
        End If
        Return (ReturnCode)
    End Function
End Module
--------------------------------------------------------------------------------
```

5.9 Table of Common Frequencies for Si548 (152.6 MHz xtal)

Fout (MHz)	LSDIV	HSDIV	FBDIV	Fvco (GHz)	Reg 23	Reg 24	Reg 26	Reg 27	Reg 28	Reg 29	Reg 30	Reg 31
70.656	0	154	71.30422018	10.881024	9Ah	00h	BAh	5Fh	E1h	4Dh	47h	00h
100	0	108	70.77326343	10.8	6Ch	00h	A7h	97h	F4h	C5h	46h	00h
122.88	0	88	70.86133683	10.81344	58h	00h	04h	92h	80h	DCh	46h	00h
125	0	88	72.08387942	11	58h	00h	34h	1Fh	79h	15h	48h	00h
148.351648	0	74	71.93985552	10.97802195	4Ah	00h	07h	5Fh	9Ah	F0h	47h	00h
148.5	0	74	72.01179554	10.989	4Ah	00h	63h	08h	05h	03h	48h	00h
148.945454	0	74	72.22780862	11.0219636	4Ah	00h	7Dh	AAh	51h	3Ah	48h	00h
150	0	72	70.77326343	10.8	48h	00h	A7h	97h	F4h	C5h	46h	00h
153.6	0	72	72.47182176	11.0592	48h	00h	84h	4Fh	C9h	78h	48h	00h
155.52	0	70	71.33944954	10.8864	46h	00h	46h	2Ah	E6h	56h	47h	00h
156.25	0	70	71.67431193	10.9375	46h	00h	D8h	B4h	9Fh	ACh	47h	00h
168.04	0	66	72.67785059	11.09064	42h	00h	C2h	9Dh	87h	ADh	48h	00h
168.75	0	64	70.77326343	10.8	40h	00h	A7h	97h	F4h	C5h	46h	00h
200	0	54	70.77326343	10.8	36h	00h	A7h	97h	F4h	C5h	46h	00h
212.5	0	52	72.41153342	11.05	34h	00h	17h	41h	5Ah	69h	48h	00h
245.76	0	44	70.86133683	10.81344	2Ch	00h	04h	92h	80h	DCh	46h	00h
250	0	44	72.08387942	11	2Ch	00h	34h	1Fh	79h	15h	48h	00h
270	0	40	70.77326343	10.8	28h	00h	A7h	97h	F4h	C5h	46h	00h
311.04	0	36	73.37771953	11.19744	24h	00h	1Ch	3Ah	B2h	60h	49h	00h
312.5	0	36	73.72214941	11.25	24h	00h	A3h	C8h	DEh	B8h	49h	00h
322.265625	0	34	71.80230177	10.95703125	22h	00h	14h	A6h	63h	CDh	47h	00h
400	0	27	70.77326343	10.8	1Bh	00h	A7h	97h	F4h	C5h	46h	00h
425	0	26	72.41153342	11.05	1Ah	00h	17h	41h	5Ah	69h	48h	00h
491.52	0	22	70.86133683	10.81344	16h	00h	04h	92h	80h	DCh	46h	00h
500	0	22	72.08387942	11	16h	00h	34h	1Fh	79h	15h	48h	00h
614.4	0	18	72.47182176	11.0592	12h	00h	84h	4Fh	C9h	78h	48h	00h
622.08	0	18	73.37771953	11.19744	12h	00h	1Ch	3Ah	B2h	60h	49h	00h
644.53125	0	17	71.80230177	10.95703125	11h	00h	14h	A6h	63h	CDh	47h	00h
750	0	15	73.72214941	11.25	0Fh	00h	A3h	C8h	DEh	B8h	49h	00h
800	0	14	73.39449541	11.2	0Eh	00h	C0h	A6h	FDh	64h	49h	00h

5.10 I2C Interface

Configuration and operation of the Si548 is controlled by reading and writing to the RAM space using the I2C interface. The device operates in slave mode with 7-bit addressing and can operate in Standard-Mode (100 kbps), Fast-Mode (400 kbps), or Fast-Mode Plus (1 Mbps). Burst data transfer with auto address increments are also supported.

The I2C bus consists of a bidirectional serial data line (SDA) and a serial clock input (SCL). Both the SDA and SCL pins must be connected to the VDD supply via an external pull-up as recommended by the I2C specification. The Si548 7-bit I2C slave address is user-customized during the part number configuration process.

Data is transferred MSB first in 8-bit words as specified by the I2C specification. A write command consists of a 7-bit device (slave) address + a write bit, an 8-bit register address, and 8 bits of data as shown in the figure below.

A write burst operation is also shown where every additional data word is written using an auto-incremented address.

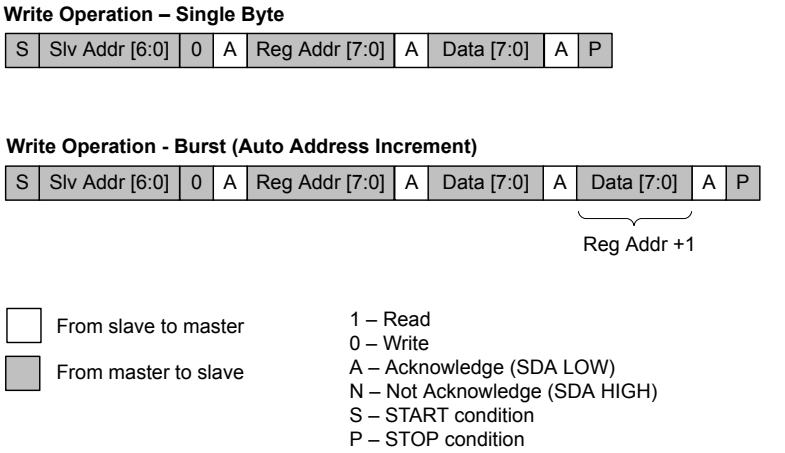

Figure 5.3. I2C Write Operation

A read operation is performed in two stages. A data write is used to set the register address, then a data read is performed to retrieve the data from the set address. A read burst operation is also supported. This is shown in the figure below.

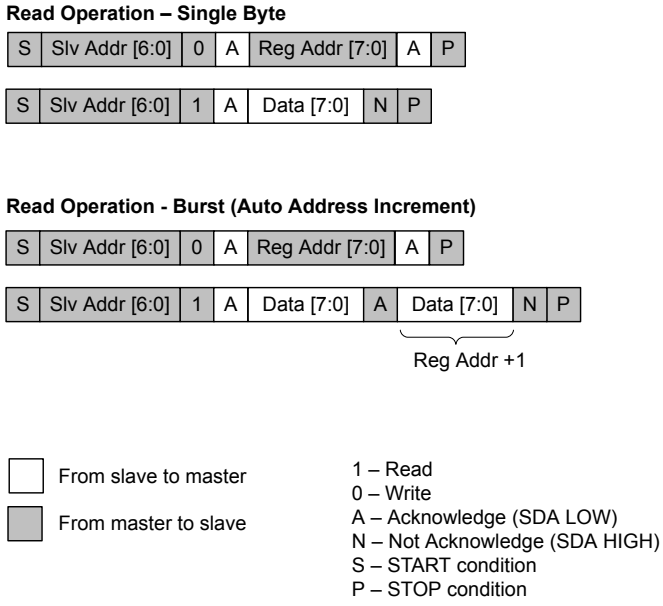

Figure 5.4. I2C Read Operation

The timing specifications and timing diagram for the I2C bus is compatible with the I2C-Bus standard. SDA timeout is supported for compatibility with SMBus interfaces.

The I2C bus can be operated at a bus voltage of 1.71 to 3.63 V and should be the same voltage as the Si548 VDD.

6. Package Outline (2.5x3.2 mm)

The figure below illustrates the package details for the 2.5x3.2 mm Si548. The table below lists the values for the dimensions shown in the illustration.

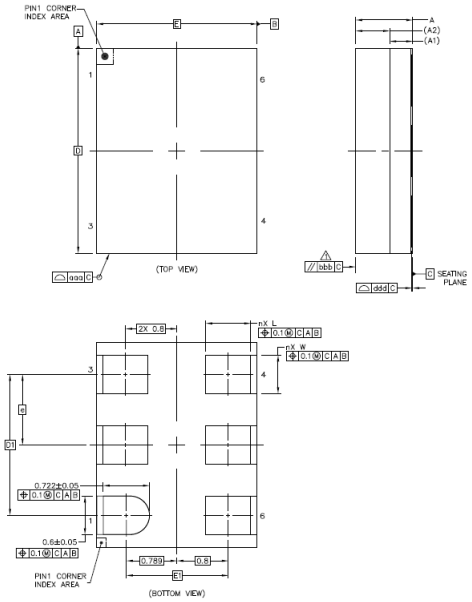

Figure 6.1. Si548 (2.5×3.2 mm) Outline Diagram

Table 6.1. Package Diagram Dimensions (mm)

Dimension	Min	Nom	Max
A	0.90	0.95	1.00
A1		0.36 REF	
A2		0.53 REF	
W	0.55	0.60	0.65
D		3.2 BSC	
E		2.5 BSC	
e		1.10 BSC	
L	0.65	0.70	0.75
n		5	
D1		2.2 BSC	
E1		1.589 BSC	
aaa		0.10	
bbb		0.10	
ddd		0.08	

Notes:

1. The dimensions in parentheses are reference.
2. All dimensions in millimeters (mm).
3. Dimensioning and Tolerancing per ANSI Y14.5M-1994.

7. PCB Land Pattern (2.5×3.2 mm)

The figure below illustrates the 2.5×3.2 mm PCB land pattern for the Si548. The table below lists the values for the dimensions shown in the illustration.

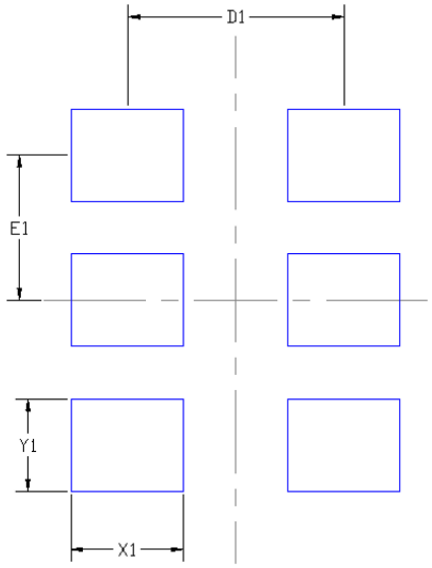

Figure 7.1. Si548 (2.5×3.2 mm) PCB Land Pattern

Table 7.1. PCB Land Pattern Dimensions (mm)

Dimension	Description	Value (mm)
X1	Width - leads on long sides	0.85
Y1	Height - leads on long sides	0.7
D1	Pitch in X directions of XLY1 leads	1.639
E1	Lead pitch XLY1 leads	1.10

Notes: The following notes and stencil design are shared as recommendations only. A customer or user may find it necessary to use different parameters and fine-tune their SMT process as required for their application and tooling.

General

1. All dimensions shown are in millimeters (mm) unless otherwise noted.
2. Dimensioning and Tolerancing is per the ANSI Y14.5M-1994 specification.
3. This Land Pattern Design is based on the IPC-7351 guidelines.
4. All dimensions shown are at Maximum Material Condition (MMC). Least Material Condition (LMC) is calculated based on a Fabrication Allowance of 0.05 mm.

Solder Mask Design

1. All metal pads are to be non-solder mask defined (NSMD). Clearance between the solder mask and the metal pad is to be 60 µm minimum, all the way around the pad.

Stencil Design

1. A stainless steel, laser-cut and electro-polished stencil with trapezoidal walls should be used to assure good solder paste release.
2. The stencil thickness should be 0.125 mm (5 mils).
3. The ratio of stencil aperture to land pad size should be 0.8:1 for the pads.

Card Assembly

1. A No-Clean, Type-3 solder paste is recommended.
2. The recommended card reflow profile is per the JEDEC/IPC J-STD-020 specification for Small Body Components.

8. Top Marking (2.5x3.2 Package)

The figure below illustrates the mark specification for the Si548 2.5x3.2 package size. The table below lists the line information.

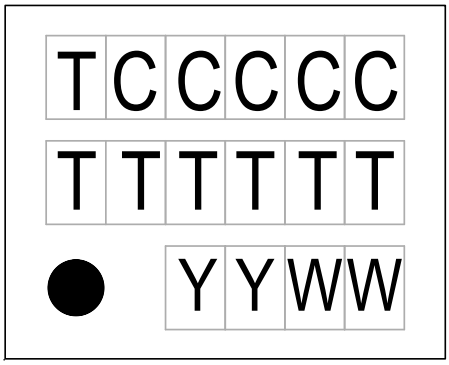

Figure 8.1. Mark Specification

Table 8.1. Si548 Top Mark Description

Line	Position	Description
1	1–6	T = Si548, CCCCC = Custom Mark Code
2	**Trace Code**	
	1–6	Six digit trace code per assembly release instructions
3	Position 1	Pin 1 orientation mark (dot)
	Position 2–3	Year (last two digits of the year), to be assigned by assembly site (ex: 2017 = 17)
	Position 4–5	Calendar Work Week number (1–53), to be assigned by assembly site

9. Revision History

Revision 1.0

June, 2021

- Updated Ordering Guide for Rev. C silicon
- Added HCSL-Fast (faster T_R/T_F) ordering option
- Updated Table 2.1, Powerup VDD Ramp Rate
- Updated Table 2.2, Settling Time for Large Frequency Change

Revision 0.5

December, 2020

- Initial release.

SKYWORKS®

ClockBuilder Pro

Customize Skyworks clock generators, jitter attenuators and network synchronizers with a single tool. With CBPro you can control evaluation boards, access documentation, request a custom part number, export for in-system programming and more!

www.skyworksinc.com/CBPro



Portfolio
www.skyworksinc.com/ia/timing

SW/HW
www.skyworksinc.com/CBPro

Quality
www.skyworksinc.com/quality

Support & Resources
www.skyworksinc.com/support

Copyright © 2021 Skyworks Solutions, Inc. All Rights Reserved.

Information in this document is provided in connection with Skyworks Solutions, Inc. ("Skyworks") products or services. These materials, including the information contained herein, are provided by Skyworks as a service to its customers and may be used for informational purposes only by the customer. Skyworks assumes no responsibility for errors or omissions in these materials or the information contained herein. Skyworks may change its documentation, products, services, specifications or product descriptions at any time, without notice. Skyworks makes no commitment to update the materials or information and shall have no responsibility whatsoever for conflicts, incompatibilities, or other difficulties arising from any future changes.

No license, whether express, implied, by estoppel or otherwise, is granted to any intellectual property rights by this document. Skyworks assumes no liability for any materials, products or information provided hereunder, including the sale, distribution, reproduction or use of Skyworks products, information or materials, except as may be provided in Skyworks' Terms and Conditions of Sale.

THE MATERIALS, PRODUCTS AND INFORMATION ARE PROVIDED "AS IS" WITHOUT WARRANTY OF ANY KIND, WHETHER EXPRESS, IMPLIED, STATUTORY, OR OTHERWISE, INCLUDING FITNESS FOR A PARTICULAR PURPOSE OR USE, MERCHANTABILITY, PERFORMANCE, QUALITY OR NON-INFRINGEMENT OF ANY INTELLECTUAL PROPERTY RIGHT; ALL SUCH WARRANTIES ARE HEREBY EXPRESSLY DISCLAIMED. SKYWORKS DOES NOT WARRANT THE ACCURACY OR COMPLETENESS OF THE INFORMATION, TEXT, GRAPHICS OR OTHER ITEMS CONTAINED WITHIN THESE MATERIALS. SKYWORKS SHALL NOT BE LIABLE FOR ANY DAMAGES, INCLUDING BUT NOT LIMITED TO ANY SPECIAL, INDIRECT, INCIDENTAL, STATUTORY, OR CONSEQUENTIAL DAMAGES, INCLUDING WITHOUT LIMITATION, LOST REVENUES OR LOST PROFITS THAT MAY RESULT FROM THE USE OF THE MATERIALS OR INFORMATION, WHETHER OR NOT THE RECIPIENT OF MATERIALS HAS BEEN ADVISED OF THE POSSIBILITY OF SUCH DAMAGE.

Skyworks products are not intended for use in medical, lifesaving or life-sustaining applications, or other equipment in which the failure of the Skyworks products could lead to personal injury, death, physical or environmental damage. Skyworks customers using or selling Skyworks products for use in such applications do so at their own risk and agree to fully indemnify Skyworks for any damages resulting from such improper use or sale.

Customers are responsible for their products and applications using Skyworks products, which may deviate from published specifications as a result of design defects, errors, or operation of products outside of published parameters or design specifications. Customers should include design and operating safeguards to minimize these and other risks. Skyworks assumes no liability for applications assistance, customer product design, or damage to any equipment resulting from the use of Skyworks products outside of Skyworks' published specifications or parameters.

Skyworks, the Skyworks symbol, Sky5®, SkyOne®, SkyBlue™, Skyworks Green™, Clockbuilder®, DSPLL®, ISOmodem®, ProSLIC®, and SiPHY® are trademarks or registered trademarks of Skyworks Solutions, Inc. or its subsidiaries in the United States and other countries. Third-party brands and names are for identification purposes only and are the property of their respective owners. Additional information, including relevant terms and conditions, posted at www.skyworksinc.com, are incorporated by reference.

Skyworks Solutions, Inc. | Nasdaq: SWKS | sales@skyworksinc.com | www.skyworksinc.com
USA: 781-376-3000 | Asia: 886-2-2735 0399 | Europe: 33 (0)1 43548540 |