TOSHIBA PHOTOCOUPLER GaAℓAs IRED & PHOTO-IC

TLP105

Isolated bus drivers

High-speed line receivers

Microprocessor system interfaces

The Toshiba TLP105 consists of a GaAℓAs light emitting diode optically coupled to a high-gain, high-speed photodetector.
The TLP105 is housed in a 6-pin MFSOP.
With a totem-pole output, the TLP105 is capable of both sinking and sourcing current.
The TLP105 has an internal Faraday shield, which provides a guaranteed common-mode transient immunity of ±10 kV/μs.
The TLP105 has a noninverting output. An inverting-output version, the TLP108, is also available.

Unit: mm

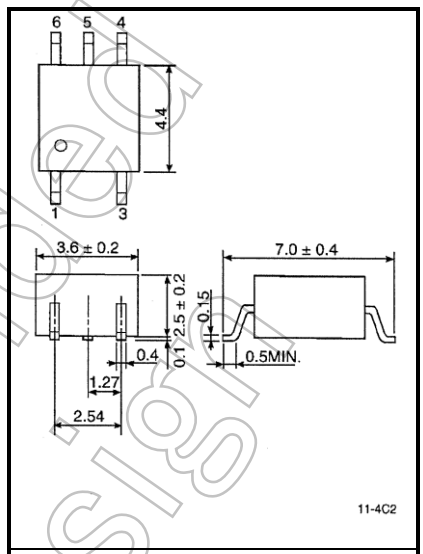

JEDEC	—
TOSHIBA	11−4C2

Weight: 0.09 g (typ.)

- Buffer logic type (totem-pole output)
- Guaranteed Performance Over Temperature: −40 to 100°C
- Power Supply Voltage: 4.5 to 20 V
- Input Threshold Current: I_{FLH} =1.6 mA (max)
- Switching Time (t_{pLH}/t_{pHL}): 250 ns (max)
- Common mode transient immunity: ±10 kV/μs
- Isolation Voltage: 3750 Vrms
- UL approved : UL1577, File No.E67349
- c-UL approved :CSA Component Acceptance Service No. 5A, File No.E67349
- Option (V4) VDE approved : DIN EN60747-5-5 (Note)

Note : When a EN60747-5-5 approved type is needed, Please designate "Option(V4)"

Pin Configuration (top View)

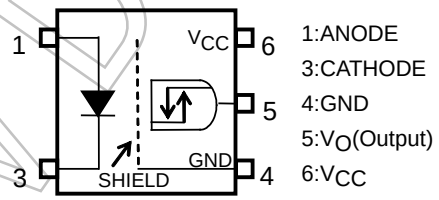

1:ANODE
3:CATHODE
4:GND
5:V_O(Output)
6:V_{CC}

Schematic

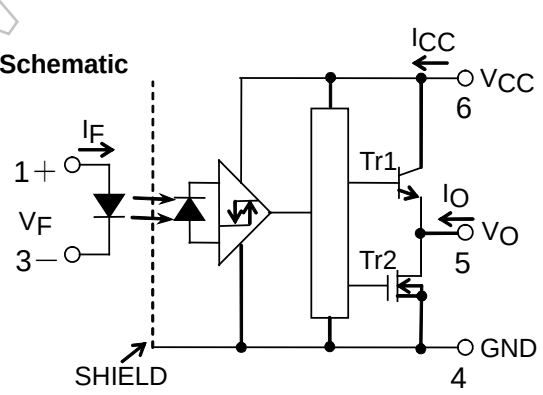

0.1 μF bypass capacitor must be connected between pin 6 and 4.

Truth Table

Input	LED	Tr1	Tr2	Output
H	ON	ON	OFF	H
L	OFF	OFF	ON	L

Not Recommended for New Design

Start of commercial production
2008-05

Recommended Operating Conditions

CHARACTERISTIC	SYMBOL	MIN	TYP.	MAX	UNIT
Input Current, ON	$I_{F(ON)}$	2	—	10	mA
Input Voltage, OFF	$V_{F(OFF)}$	0	—	0.8	V
Supply Voltage*	V_{CC}	4.5	—	20	V
Operating Temperature	T_{opr}	-40	—	100	°C
Fan-out (TTL Load)	N	—	—	4	—

* This item denotes operating range, not meaning of recommended operating conditions.

Note: Recommended operating conditions are given as a design guideline to obtain expected performance of the device. Additionally, each item is an independent guideline respectively. In developing designs using this product, please confirm specified characteristics shown in this document.

Absolute Maximum Ratings (Ta = 25°C)

	CHARACTERISTIC		SYMBOL	RATING	UNIT
LED	Forward Current		I_F	20	mA
	Forward Current Derating (Ta ≥ 83°C)		$\Delta I_F/°C$	-0.48	mA/°C
	Peak Transient Forward Current	(Note1)	I_{FPT}	1	A
	Input Power Dissipation		P_D	40	mW
	Reverse Voltage		V_R	5	V
DETECTOR	Output Current 1 (Ta ≤ 25°C)		I_{O1}	25/-15	mA
	Output Current 2 (Ta ≤ 100°C)		I_{O2}	5/-5	mA
	Output Current Derating (Ta ≥ 25°C)		$\Delta IO1/°C$	-0.26/-0.13	mA/°C
	Peak Output Current	(Note2)	I_{OP}	50/-50	mA
	Output Voltage		V_O	-0.5 to 20	V
	Output Power Dissipation		P_O	75	mW
	Supply Voltage		V_{CC}	-0.5 to 20	V
Operating Temperature Range			T_{opr}	−40 to 100	°C
Storage Temperature Range			T_{stg}	−55 to 125	°C
Lead Solder Temperature (10 s)			T_{sol}	260	°C
Isolation Voltage (AC, 60 s, R.H. ≤ 60%, Ta = 25°C)		(Note3)	BV_S	3750	V_{rms}

Note: Using continuously under heavy loads (e.g. the application of high temperature/current/voltage and the significant change in temperature, etc.) may cause this product to decrease in the reliability significantly even if the operating conditions (i.e. operating temperature/current/voltage, etc.) are within the absolute maximum ratings.
Please design the appropriate reliability upon reviewing the Toshiba Semiconductor Reliability Handbook (“Handling Precautions”/“Derating Concept and Methods”) and individual reliability data (i.e. reliability test report and estimated failure rate, etc).

Note 1: Pulse width ≤ 1 μs, 300 pps.

Note 2: Pulse width ≤ 5 μs, duty cycle ≤ 0.025

Note 3: Device considered a two terminal device: pins 1 and 3 shorted together and pins 4, 5 and 6 shorted together.

Not Recommended for New Design

Electrical Characteristics
(Unless otherwise specified, Ta = -40 to 100°C, V_{CC} = 4.5 to 20 V)

CHARACTERISTIC	SYMBOL	TEST CIRCUIT	CONDITION		MIN	TYP.	MAX	UNIT
Input Forward Voltage	V_F	—	I_F=10 mA, Ta=25°C		1.45	1.57	1.75	V
Temperature Coefficient of Forward Voltage	$\Delta V_F/\Delta Ta$	—	I_F=10 mA		—	-2.0	—	mV/°C
Input Reverse Current	I_R	—	V_R=5 V, Ta=25°C		—	—	10	μA
Input Capacitance	C_T	—	V=0, f=1 MHz, Ta=25°C		—	100	-	pF
Logic Low Output Voltage	V_{OL}	1	I_{OL}=3.5 mA, V_F=0.8 V		—	0.2	0.6	V
Logic High Output Voltage	V_{OH}	2	I_{OH}=−2.6 mA, I_F=5 mA	V_{CC}=4.5 V	2.7	4.0	—	V
				V_{CC}=20 V	17.4	19.0	—	
Logic Low Supply Current	I_{CCL}	3	V_F=0 V	V_{CC}=20 V	—	—	3.0	mA
				V_{CC}=5.5 V	—	—	3.0	
Logic High Supply Current	I_{CCH}	4	I_F=5 mA	V_{CC}=20 V	—	—	3.0	mA
				V_{CC}=5.5 V	—	—	3.0	
Logic Low Short Circuit Output Current (Note 1)	I_{OSL}	5	V_F=0 V	V_{CC}=V_O=5.5 V	15	80	—	mA
				V_{CC}=V_O=20 V	20	90	—	
Logic High Short Circuit Output Current (Note 1)	I_{OSH}	6	I_F=5 mA V_O=GND	V_{CC}=5.5 V	−5	−15	—	mA
				V_{CC}=20 V	−10	−20	—	
Input Current Logic High Output	I_{FLH}	—	I_O=-2.6 mA, V_O>2.4 V		—	0.4	1.6	mA
Input Voltage Logic Low Output	V_{FHL}	—	I_O=3.5 mA, V_O<0.4 V		0.8	—	—	V
Input Current Hysteresis	I_{HYS}	—	V_{CC}=5 V		—	0.05	—	mA

*All typical values are at Ta=25°C

Note 1: Duration of output short circuit time should not exceed 10 ms.

Note : A ceramic capacitor (0.1 μA) should be connected from pin 6 to pin 4 to stabilize the operation of the high gain linear amplifier. Failure to provide the bypassing may impair the switching property. The total lead length between capacitor and coupler should not exceed 1 cm.

Isolation Characteristics (Ta = 25°C)

Characteristic	Symbol	Test Condition	Min	Typ.	Max	Unit
Capacitance input to output	C_S	V_S = 0, f = 1 MHz	—	0.8	—	pF
Isolation resistance	R_S	R.H. ≤ 60%, V_S = 500 V	1×10^{12}	10^{14}	—	Ω
Isolation voltage	BV_S	AC,60 s	3750	—	—	V_{rms}
		AC,1 s, in oil	—	10000	—	
		DC,60 s, in oil	—	10000	—	V_{dc}

Not Recommended for New Design

Switching Characteristics

(Unless otherwise specified, Ta = -40 to 100°C, V_{CC} = 4.5 to 20 V)

CHARACTERISTIC	SYMBOL	TEST CIRCUIT	CONDITION	MIN	TYP.	MAX	UNIT
Propagation Delay Time to Logic High output	t_{pLH}	7, 8	I_F=0→3 mA	30	150	250	ns
Propagation Delay Time to Logic Low output	t_{pHL}		I_F=3→0 mA	30	150	250	ns
Switching Time Dispersion between ON and OFF	$\|t_{pHL}-t_{pLH}\|$		—	—	—	220	ns
Rise Time (10 – 90 %)	t_r		I_F=0→3 mA , V_{CC}=5 V	—	30	75	ns
Fall Time (90 – 10 %)	t_f		I_F=3→0 mA , V_{CC}=5 V	—	30	75	ns
Common Mode transient Immunity at High Level Output	CM_H	9	V_{CM}=1000V_{p-p}, I_F=5 mA, V_{CC}=20 V, Ta=25°C	-10000	—	—	V/μs
Common Mode transient Immunity at Low Level Output	CM_L		V_{CM}=1000V_{p-p}, I_F=0 mA, V_{CC}=20 V, Ta=25°C	10000	—	—	V/μs

*All typical values are at Ta=25°C

Test Circuit 1: V_{OL}

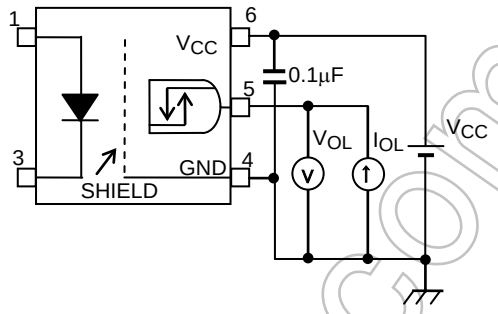

Test Circuit 2: V_{OH}

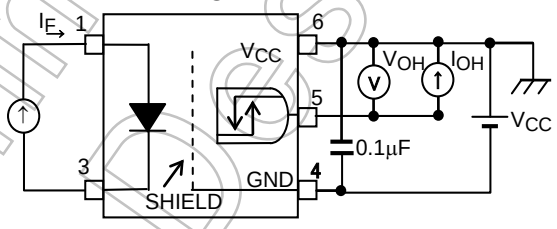

Test Circuit 3: I_{CCL}

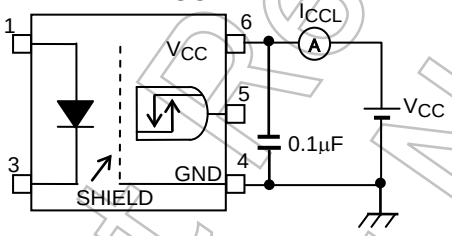

Test Circuit 4: I_{CCH}

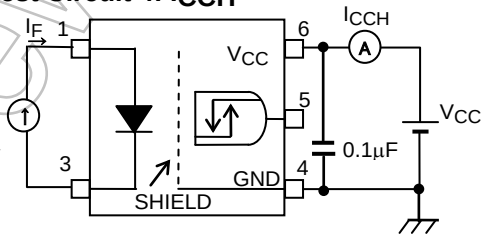

Test Circuit 5: I_{OSL}

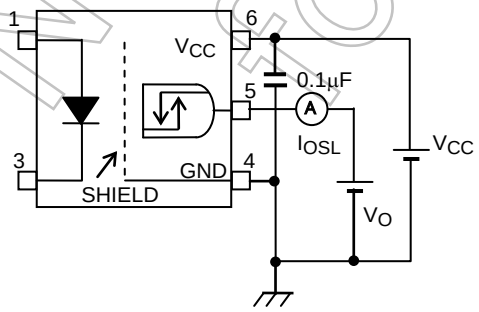

Test Circuit 6: I_{OSH}

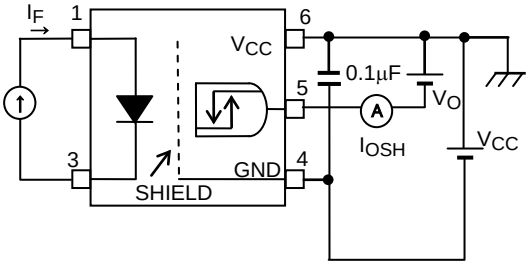

Not Recommended for New Design

Test Circuit 7: Switching Time Test Circuit

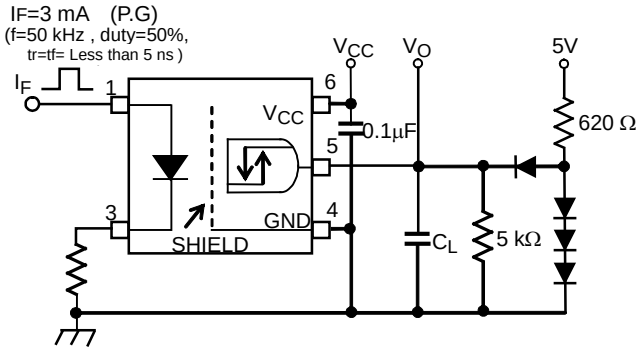

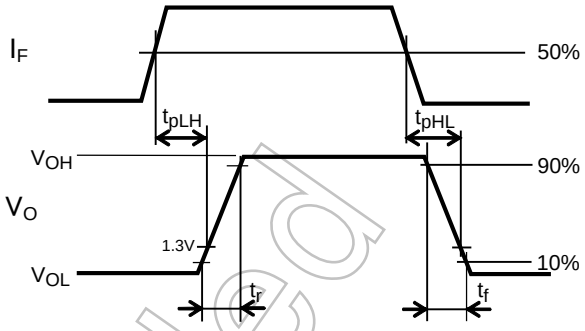

C_L is approximately 15 pF which includes probe and stray capacitance.
P.G.: Pulse generator

Test Circuit 8: Switching Time Test Circuit

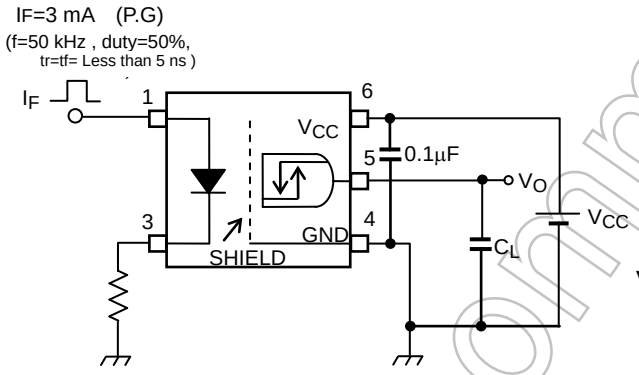

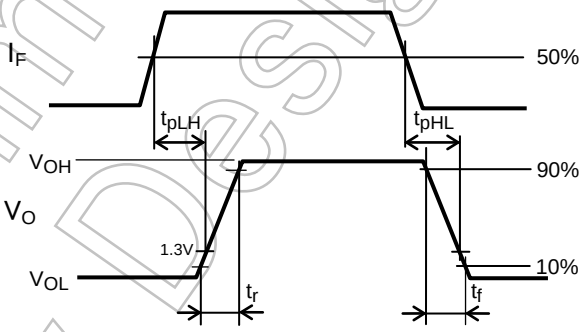

C_L is approximately 15 pF which includes probe and stray capacitance.
P.G.: Pulse generator

Test Circuit 9: Common Mode Transient Immunity Test Circuit

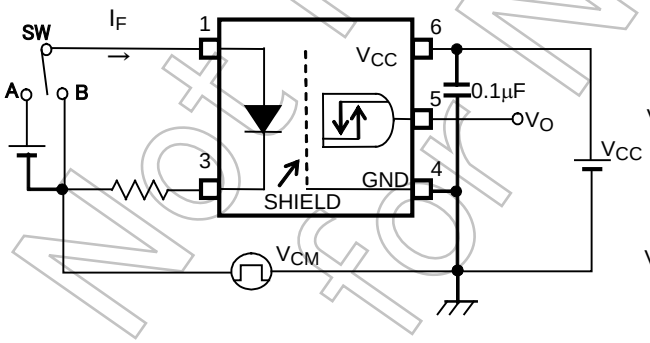

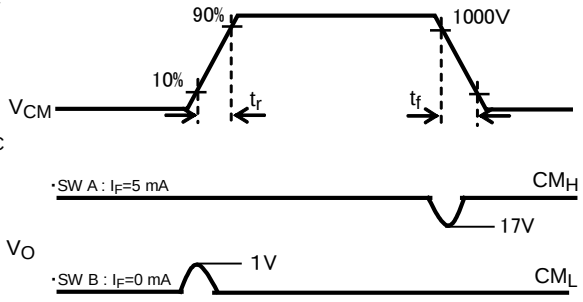

$$CM_H = \frac{800(V)}{t_f(\mu s)} \qquad CM_L = \frac{800(V)}{t_r(\mu s)}$$

Not Recommended for New Design

RESTRICTIONS ON PRODUCT USE

- Toshiba Corporation, and its subsidiaries and affiliates (collectively "TOSHIBA"), reserve the right to make changes to the information in this document, and related hardware, software and systems (collectively "Product") without notice.
- This document and any information herein may not be reproduced without prior written permission from TOSHIBA. Even with TOSHIBA's written permission, reproduction is permissible only if reproduction is without alteration/omission.
- Though TOSHIBA works continually to improve Product's quality and reliability, Product can malfunction or fail. Customers are responsible for complying with safety standards and for providing adequate designs and safeguards for their hardware, software and systems which minimize risk and avoid situations in which a malfunction or failure of Product could cause loss of human life, bodily injury or damage to property, including data loss or corruption. Before customers use the Product, create designs including the Product, or incorporate the Product into their own applications, customers must also refer to and comply with (a) the latest versions of all relevant TOSHIBA information, including without limitation, this document, the specifications, the data sheets and application notes for Product and the precautions and conditions set forth in the "TOSHIBA Semiconductor Reliability Handbook" and (b) the instructions for the application with which the Product will be used with or for. Customers are solely responsible for all aspects of their own product design or applications, including but not limited to (a) determining the appropriateness of the use of this Product in such design or applications; (b) evaluating and determining the applicability of any information contained in this document, or in charts, diagrams, programs, algorithms, sample application circuits, or any other referenced documents; and (c) validating all operating parameters for such designs and applications. **TOSHIBA ASSUMES NO LIABILITY FOR CUSTOMERS' PRODUCT DESIGN OR APPLICATIONS.**
- **PRODUCT IS NEITHER INTENDED NOR WARRANTED FOR USE IN EQUIPMENTS OR SYSTEMS THAT REQUIRE EXTRAORDINARILY HIGH LEVELS OF QUALITY AND/OR RELIABILITY, AND/OR A MALFUNCTION OR FAILURE OF WHICH MAY CAUSE LOSS OF HUMAN LIFE, BODILY INJURY, SERIOUS PROPERTY DAMAGE AND/OR SERIOUS PUBLIC IMPACT ("UNINTENDED USE"). ** Except for specific applications as expressly stated in this document, Unintended Use includes, without limitation, equipment used in nuclear facilities, equipment used in the aerospace industry, medical equipment, equipment used for automobiles, trains, ships and other transportation, traffic signaling equipment, equipment used to control combustions or explosions, safety devices, elevators and escalators, devices related to electric power, and equipment used in finance-related fields. **IF YOU USE PRODUCT FOR UNINTENDED USE, TOSHIBA ASSUMES NO LIABILITY FOR PRODUCT.** For details, please contact your TOSHIBA sales representative.
- Do not disassemble, analyze, reverse-engineer, alter, modify, translate or copy Product, whether in whole or in part.
- Product shall not be used for or incorporated into any products or systems whose manufacture, use, or sale is prohibited under any applicable laws or regulations.
- The information contained herein is presented only as guidance for Product use. No responsibility is assumed by TOSHIBA for any infringement of patents or any other intellectual property rights of third parties that may result from the use of Product. No license to any intellectual property right is granted by this document, whether express or implied, by estoppel or otherwise.
- **ABSENT A WRITTEN SIGNED AGREEMENT, EXCEPT AS PROVIDED IN THE RELEVANT TERMS AND CONDITIONS OF SALE FOR PRODUCT, AND TO THE MAXIMUM EXTENT ALLOWABLE BY LAW, TOSHIBA (1) ASSUMES NO LIABILITY WHATSOEVER, INCLUDING WITHOUT LIMITATION, INDIRECT, CONSEQUENTIAL, SPECIAL, OR INCIDENTAL DAMAGES OR LOSS, INCLUDING WITHOUT LIMITATION, LOSS OF PROFITS, LOSS OF OPPORTUNITIES, BUSINESS INTERRUPTION AND LOSS OF DATA, AND (2) DISCLAIMS ANY AND ALL EXPRESS OR IMPLIED WARRANTIES AND CONDITIONS RELATED TO SALE, USE OF PRODUCT, OR INFORMATION, INCLUDING WARRANTIES OR CONDITIONS OF MERCHANTABILITY, FITNESS FOR A PARTICULAR PURPOSE, ACCURACY OF INFORMATION, OR NONINFRINGEMENT.**
- GaAs (Gallium Arsenide) is used in Product. GaAs is harmful to humans if consumed or absorbed, whether in the form of dust or vapor. Handle with care and do not break, cut, crush, grind, dissolve chemically or otherwise expose GaAs in Product.
- Do not use or otherwise make available Product or related software or technology for any military purposes, including without limitation, for the design, development, use, stockpiling or manufacturing of nuclear, chemical, or biological weapons or missile technology products (mass destruction weapons). Product and related software and technology may be controlled under the applicable export laws and regulations including, without limitation, the Japanese Foreign Exchange and Foreign Trade Law and the U.S. Export Administration Regulations. Export and re-export of Product or related software or technology are strictly prohibited except in compliance with all applicable export laws and regulations.
- Please contact your TOSHIBA sales representative for details as to environmental matters such as the RoHS compatibility of Product. Please use Product in compliance with all applicable laws and regulations that regulate the inclusion or use of controlled substances, including without limitation, the EU RoHS Directive. **TOSHIBA ASSUMES NO LIABILITY FOR DAMAGES OR LOSSES OCCURRING AS A RESULT OF NONCOMPLIANCE WITH APPLICABLE LAWS AND REGULATIONS.**

Not Recommended for New Design

Unikeyic Electronics

Global Electronic Components Distributor

Click to view pricing, inventory, delivery, and lifecycle information:

TOSHIBA:

TLP4176G(TP,M,F) SSM3J358R,LF(T TC7S32F,LF(T TCKE805NA,RF(S TCR2LE36,LM(CT TK7P60W,RVQ(S 2SC2712-Y,LF(T TLP3412SRLA(TP,E(O CES520,L3F(T TC7SZU04F,LJ(CT TDS4B212MX,ELF(S DF2S6.8MFS,L3M(T RN4985,LF(CT TC7W08FU,LF(T TLP2704(TP,E(T TLP385(GB-TPL,E(T SSM6L36FE,LM(T TC75S63TU,LF(T TC7SH04FU,LJ(CT TC7WZ08FK,LJ(CT TK7R7P10PL,RQ(S2 TK100E10N1,S1X(S 1SS361FV,L3F(T CEZ6V8,L3F DF3A5.6FU(TE85L,F) TC78H651FNG,EL TLP2710(TP,E(T TPW3R70APL,L1Q(M TB6588FG,8,EL,JU TBC847B,LM(T