GENERAL DESCRIPTION

The MCP6004T (quad)are general purpose low off set,high frequency response andlow power operational amplifiers.With an excellent bandwidth of 1M Hz, a slew rate of 1V/μs,and a quiescent current of 56μA peramplifier at5V,the MCP6004T family can bedesigned into a wide range of applications. The MCP6004T op-amps are designed to provide optimal performance in low voltage and lowpower systems.The input common-mode voltage range in cludes ground,and the maximum input offset voltage are 3mV.Theseparts provide rail-to-rail output swing into heavyloads.The MCP6004T families of operational amplifiersare specified at the full temperature range of -40℃ to +85°℃ under single or dual powersupplies of 1.8V to 5.5V.

FEATURES

- Input Offset Voltage:1mV (Typical)
- Low Supply Current:56μA(Vs=5V)
- Supply Range:1.8V to 5.5V
- Gain Bandwidth:1MHz(Vs=5V)
- Slew rate:1V/us (Vs=5V)
- Rail-to-Rail Input and Output
- Low Cost
- Micro size Packages:
- MCP6004T-I/SL:SOIC-14

  MCP6004T-I/ST:TSSOP-14

APPLICATIONS

- Battery and Power Supply Control
- Audio Outputs
- Smoke/Gas/Environment Sensors
- Portable Equipment and Mobile Devices
- Sensor Interfaces
- Active Filters
- Medical Equipment

Pin Configuration and Functions

Pin Assignments	Marking
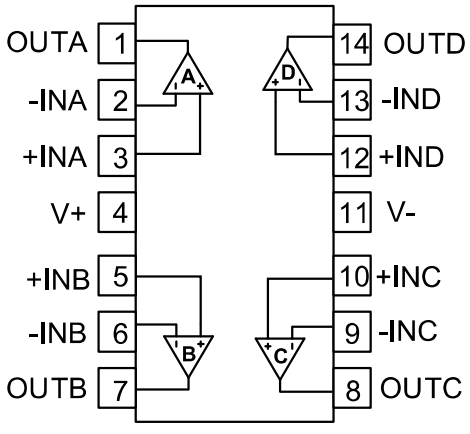 SOIC-14/TSSOP-14	 SOIC-14
	 TSSOP-14

Note: ***=batch

REEL SPECIFICATION

P/N	PKG	QTY
MCP6004T-I/SL	SOIC-14	2500
MCP6004T-I/ST	TSSOP-14	2500

Pin Description

PIN		I/O	DESCRIPTION
NAME	Number		
+INA	3	I	Noninverting input, channel A
+INB	5	I	Noninverting input, channel B
+INC	10	I	Noninverting input, channel C
+IND	12	I	Noninverting input, channel D
-INA	2	I	Inverting input, channel A
-INB	6	I	Inverting input, channel B
-INC	9	I	Inverting input, channel C
-IND	13	I	Inverting input, channel D
OUTA	1	O	Output, channel A
OUTB	7	O	Output, channel B
OUTC	8	O	Output, channel C
OUTD	14	O	Output, channel D
V-	4	-	Negative (lowest) power supply
V+	11	-	Positive (highest) power supply

TYPICAL APPLICATION

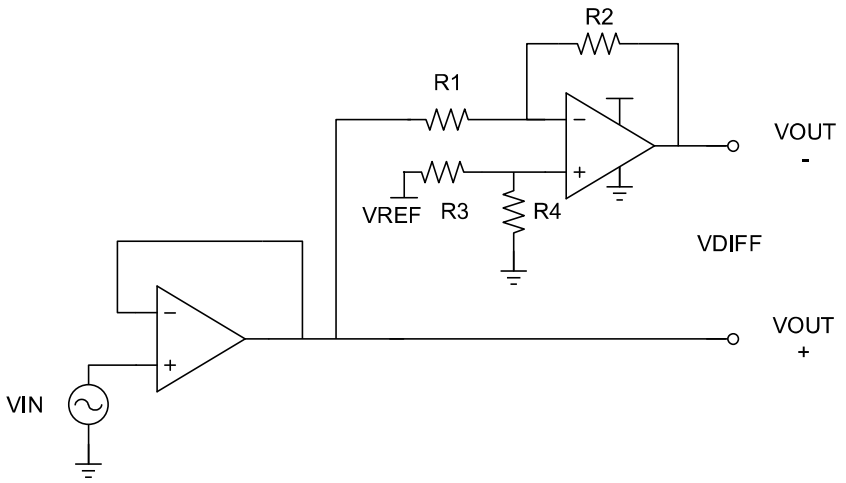

SPECIFICATIONS

Absolute Maximum Ratings(1)

		MIN	MAX	UNIT
Voltage	Supply Voltage		6	V
	Signal Input Terminals Voltage(2)	(V-) - 0.5	(V+) + 0.5	V
	Signal Input Terminals Voltage(3)	(V-) - 0.5	(V+) + 0.5	V
Current	Signal Input Terminals Current(2)	-10	10	mA
	Signal output Terminals Current(3)	-200	200	mA
	Output Short-Circuit(4)	Continuous		
θ_{JA}	Operating Temperature Range	-40	85	°C
	Storage Temperature Range	-65	150	°C
	Junction Temperature	-40	150	°C

(1) Stresses above these ratings may cause permanent damage. Exposure to absolute maximum conditions for extended periods may degrade device reliability. These are stress ratings only, and functional operation of the device at these or any other conditions beyond those specified is not implied.

(2) Input terminals are diode clamped to the power-supply rails. Input signals that can swing more than 0.5V beyond the supply rails should be current limited to 10mA or less.

(3) Output terminals are diode-clamped to the power-supply rails. Output signals that can swing more than 0.5V beyond the supply rails should be current-limited to ±200mA or less.

(4) Short-circuit to ground, one amplifier per package.

ESD Ratings

			VALUE	UNIT
$V_{(ESD)}$	Electrostatic discharge	Human-Body Model (HBM)	±2000	V
		Charged-Device Model (CDM)	±500	V
		Machine Model	100	V

Recommended Operating Conditions

		MIN	MAX	UNIT
Supply voltage, Vs= (V+) - (V-)	Single-supply	1.8	5.5	V
	Dual-supply	±0.9	±2.75	V

ELECTRICAL CHARACTERISTICS (V_S = +5V)

At T_A = 25°C, V_{CM}=V_{OUT}= V_S /2, unless otherwise noted.

PARAMETER		CONDITIONS	MIN	TYP	MAX	UNIT
OFFSET VOLTAGE						
V_{OS}	Input Offset Voltage		-3	±1	3	mV
dV_{OS}/dT	Input Offset Voltage Average Drift	T_A = -40 °C to 85°C		1.8		µV/°C
INPUT CURRENT						
I_B	Input Bias Current			5		pA
I_{OS}	Input Offset Current			1		pA
NOISE						
V_N	Input Voltage Noise	f=0.1Hz to 10Hz		20		μV_{PP}
e_n	Input Voltage Noise Density	f=1kHz		65		nV/√Hz
INPUT VOLTAGE						
V_{CM}	Common-Mode Voltage Range		V_{S-}-0.1		V_{S+}+0.1	V
CMRR	Common-Mode Rejection Ratio	V_{CM}=0.1V to 4V	70	80		dB
FREQUENCY RESPONSE						
GBW	Gain-Bandwidth Product			1		MHz
SR	Slew Rate	G = +1, V_{IN}=2V Step		1		V/us
t_S	Settling Time to 0.1%	G = +1, V_{IN}=2V Step		2.5		us
OUTPUT						
A_V	Open-Loop Voltage Gain	V_{OUT}=0.1V to 4.9V R_L=100kΩ	80	100		dB
$V_{OUT-SWING}$	Output Swing from Rail	R_L=100kΩ			5	mV
I_{SC}	Output Short-Circuit Current	Source current		45		mA
		Sink current		70		mA
C_L (1)	Capacitive Load Drive	G = +1, V_{IN}=0.2V Step			1000	pF

POWER SUPPLY						
PSRR	Power-Supply Rejection Ratio	V_S=1.8V to 5.5V	80	90		dB
V_S	Operating Voltage Range		1.8		5.5	V
I_Q	Quiescent Current/Amplifier	I_O=0A		56		uA

(1) Capacitive load drive means that above a given maximum value, the output waveform will oscillate under the step response.

TYPICAL CHARACTERISTICS

At T_A = 25°C, V_S = +5V, G=+1, V_{IN}=V_{OUT}= V_S /2, unless otherwise noted.

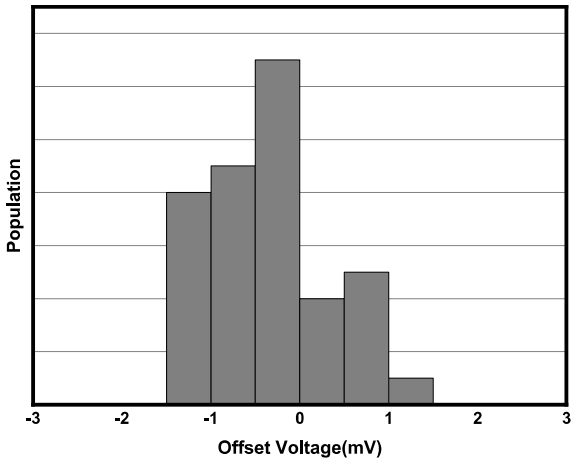

Figure 2. Offset Voltage Production Distribution

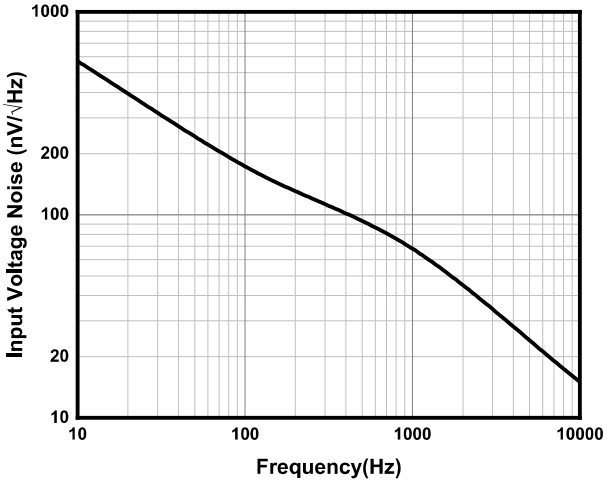

Figure 3. Input Voltage Noise Spectral Density

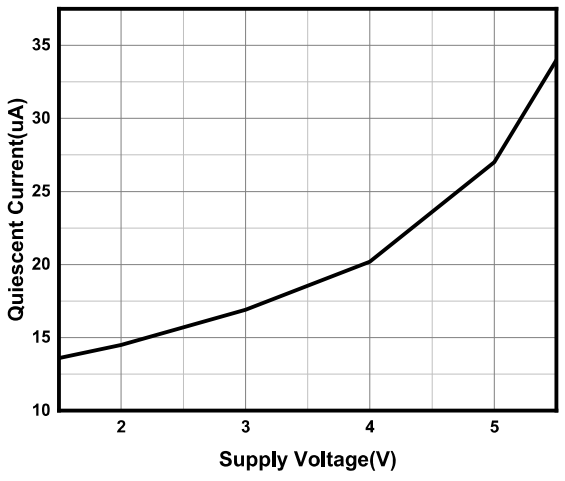

Figure 4. Quiescent Current vs Supply Voltage

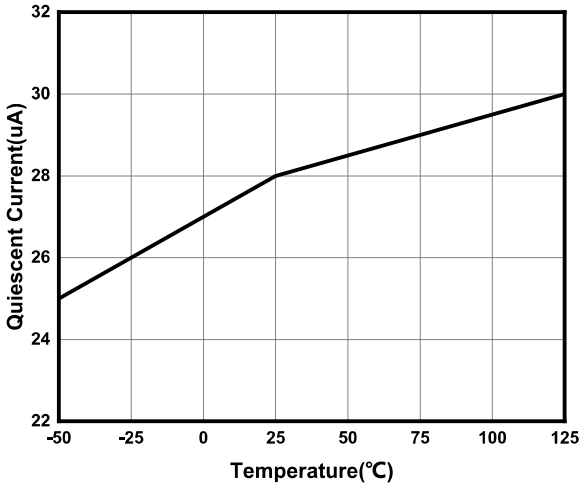

Figure 5. Quiescent Current vs Temperature

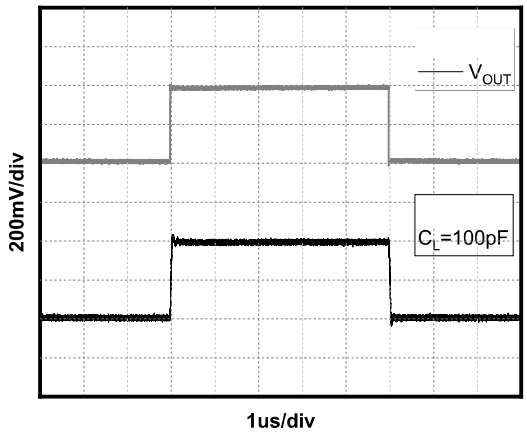

Figure 6. Small-Signal Step Response(V_S=5)

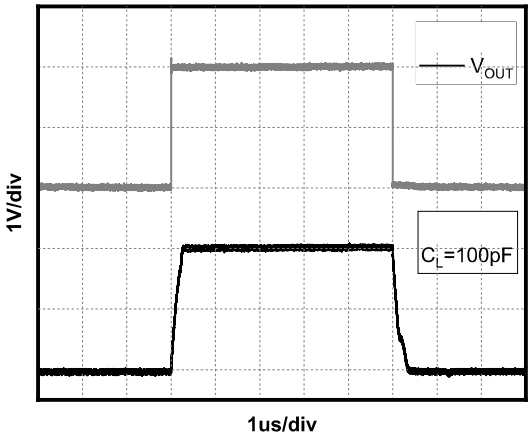

Figure 7. Large-Signal Step Response(V_S=5V)

TYPICAL CHARACTERISTICS

At T_A = 25°C, V_S = +5V, G=+1, V_{IN}=V_{OUT}= V_S /2, unless otherwise noted.

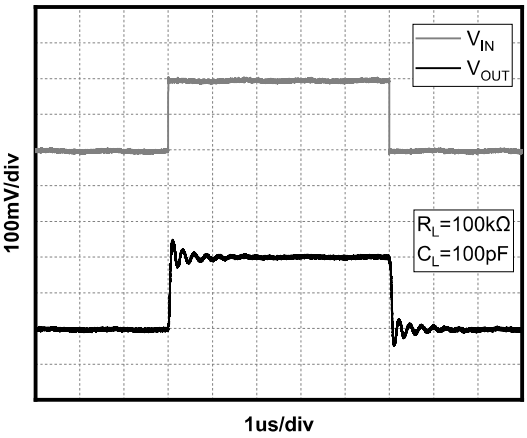

Figure 8. Small-Signal Step Response(V_S=1.5V)

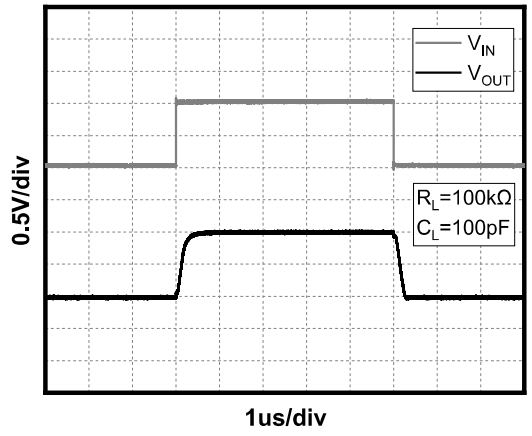

Figure 9.Large-Signal Step Response(V_S=1.5V)

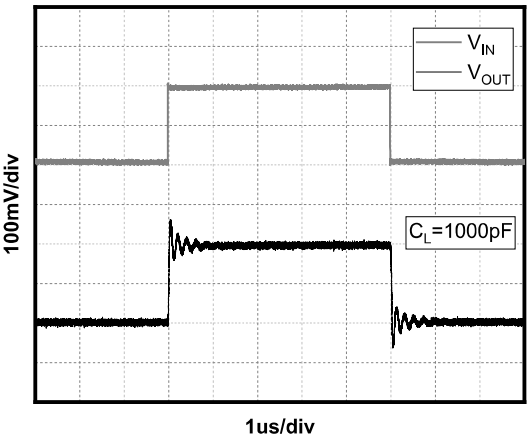

Figure 10. Capacitive Load Drive(C_L=1000pF)

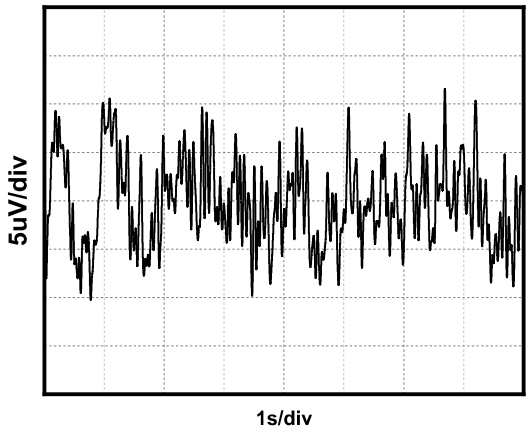

Figure 11. 0.1Hz to 10Hz Noise

Detailed Descriptio

Detailed Description

Oyerview

The MCP6004T devices are a low power,unity-gain stable,rail-to-rail operational amplifier that operate in a single-supply voltage range of 1.8V to 5.5V (±0.9V to ±2.75V).A high supply voltage of 6V(absolute maximum)can per manently damage the amplfier.Rail-to-rail input and output wobbles significantly increase the dynamic range,esp -ecially in low-supply applications . Good layout practices require that a 0.1uF capacitor be used where it is tightly threaded through the power supply pin.

Phase Reversal Protection

The MCP6004T devices have internal phase-reversal protection . Many op amps exhibit phase reversal when the input is driven beyond the linear common-mode range . This condition is most often encountered in noninverting circuits when the input is driven beyond the specified common-mode voltage range,causing the outpur to reverse into the opposite rail . The input of the MCP6004T prevents phase reversal with excessive commonmode voltage. Instead,the appropriate rail limits the output voltage.

Typical Applications

1 Voltage Follower

As shown in Figure 12,the voltage gain is 1.With this circuit,the output voltage Vour is configured to be equal to the input voltage Vin.Due to the high input impedance and low output impedance,the circuit can also stabilize the out-put voltage,the output voltage expression is

$$V_{OUT}=V_{IN} \quad (1)$$

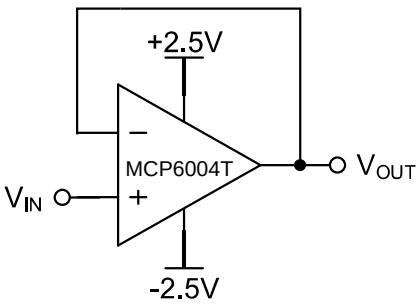

Figure 12. Voltage Follower

2 Inverting Proportional Amplifier

As shown in Figure 13, for a reverse-phase proportional amplifier, the input voltage V_{IN} is amplified by a voltage gain that depends on the ratio of R1 to R2. The output voltage V_{OUT} is inversely with the input voltage V_{IN}. The input impedance of the circuit is equal to R1, and the output voltage expression is

$$V_{OUT}=-\frac{R2}{R1}V_{IN} \quad (2)$$

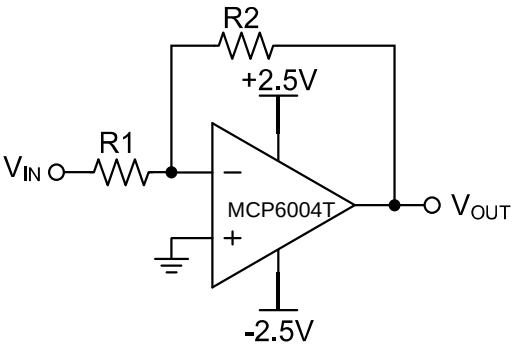

Figure 13. Inverting Proportional Amplifier

3 Noninverting Proportional Amplifier

As shown in Figure 14, for a noninverting amplifier, the input voltage V_{IN} is amplified by a voltage gain that depends on the ratio of R1 to R2. The output voltage V_{OUT} is in phase with the input voltage V_{IN}. In fact, this circuit has a high input impedance because its input side is the same as the input side of the operational amplifier. The output voltage expression is

$$V_{OUT}=(1+\frac{R2}{R1})V_{IN} \quad (3)$$

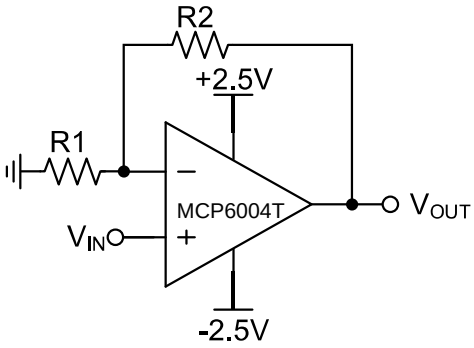

Figure 14. Noninverting Proportional Amplifier

Layout Guidelines

Attention to good layout practices is always recommended. Keep traces short. When possible, use a PCB ground plane with surface-mount components placed as close to the device pins as possible. Place a 0.1uF capacitor closely across the supply pins.

These guidelines should be applied throughout the analog circuit to improve performance and provide benefits such as reducing the EMI susceptibility.

PACKAGE DESCRIPTION

SOIC-14(SOP-14)

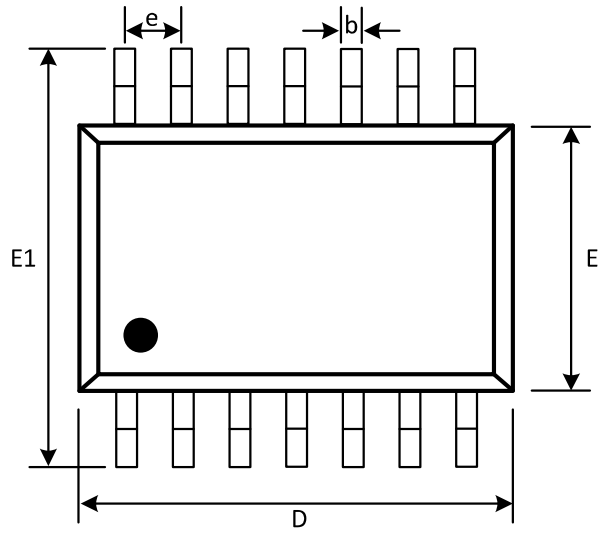

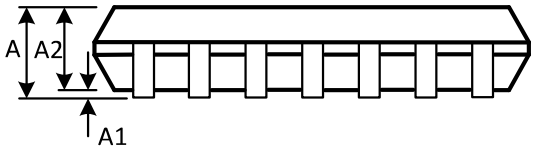

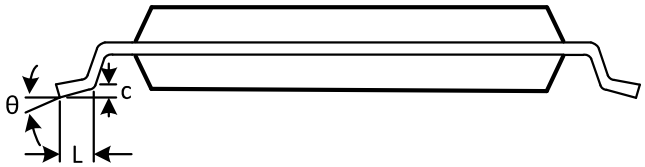

(Unit：mm)

Symbol	Min	Max
A	1.350	1.750
A1	0.100	0.250
A2	1.350	1.550
b	0.310	0.510
c	0.100	0.250
D	8.450	8.850
e	1.270(BSC)	
E	5.800	6.200
E1	3.800	4.000
L	0.400	1.270
θ	0°	8°

TSSOP-14

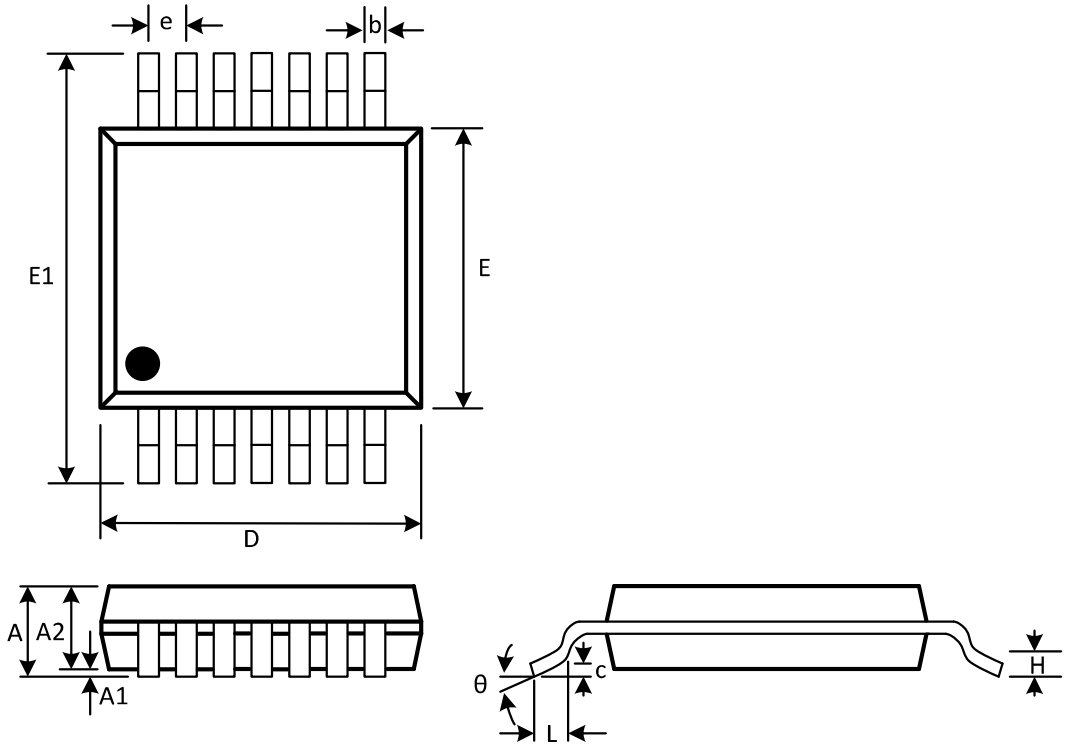

(Unit：mm)

Symbol	Min	Max
A		1.200
A1	0.050	0.150
A2	0.800	1.050
b	0.190	0.300
c	0.090	0.200
D	4.860	5.100
e	0.650(BSC)	
E	4.300	4.500
E1	6.250	6.550
L	0.500	0.700
	0.250(TYP)	
θ	1°	7°