

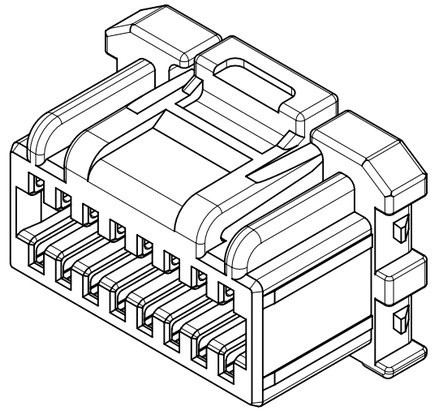

注記 NOTES

1. 材料：TABLE 1参照
   MATERIAL : SEE TABLE 1.
2. (極数/2)=偶数 に適用。
   APPLY TO (CIRCUIT /2) = EVEN.
3. 製品仕様書、コネクタ取扱説明書、適合嵌合相手、適合端子、
   適合リテーナーはSHEET 2をご参照ください。
   PLEASE REFER TO SHEET 2 FOR PRODUCT SPECIFICATION,
   APPLICATION SPECIFICATION, MATE WITH,
   APPLICABLE CRIMP TERMINAL, APPLICABLE RETAINER.
4. 発注番号 : SHEET 2 参照
   ORDER NUMBER : PLEASE REFER TO SHEET 2

214527 ** 0 *

極数
CIRCUIT SIZE

番号 NO.	ハウジングカラー HOUSING COLOR
0	ナチュラル（白） NATURAL(WHITE)
1	黒　BLACK
2	赤　RED
4	青　BLUE

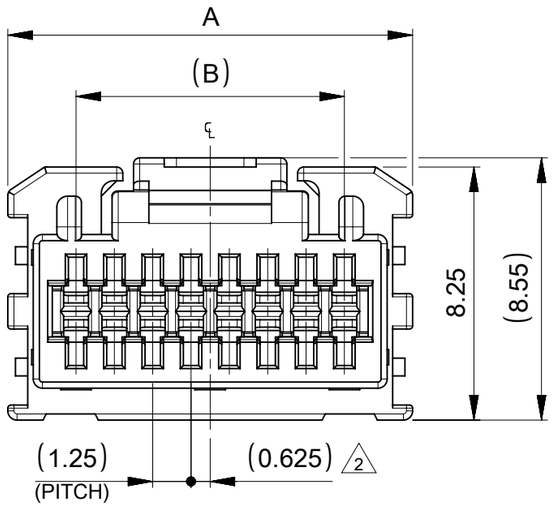

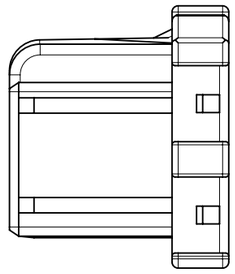

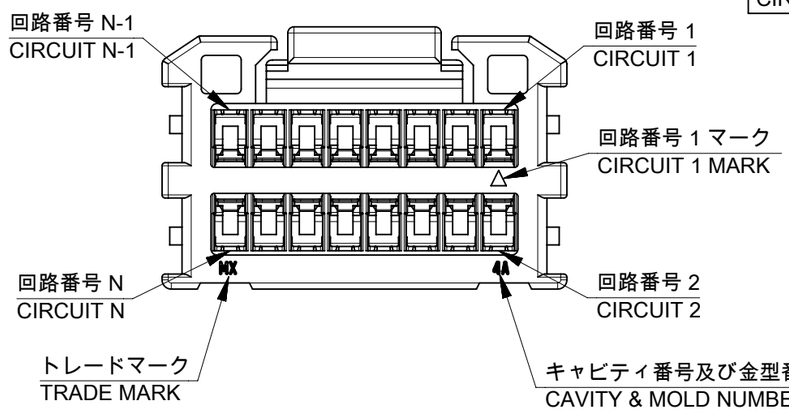

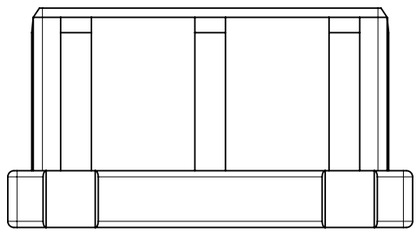

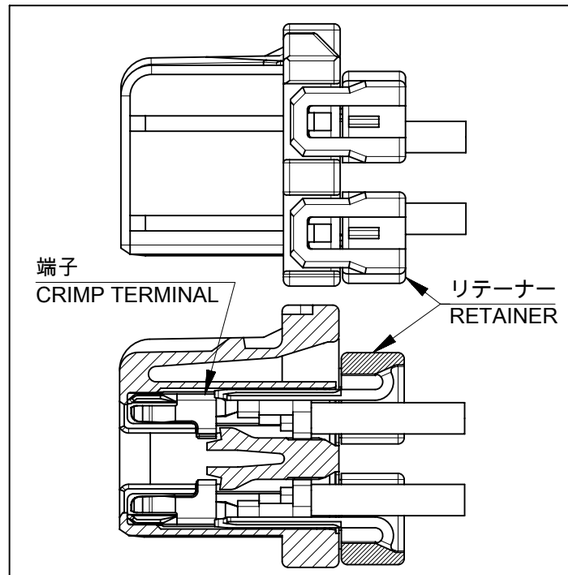

端子 & リテーナー　装着図
CRIMP TERMINAL & RETAINER
ASSEMBLY DRAWING

1 TABLE1

部品 PART	材質 MATERIAL
ハウジング HOUSING	PBT UL94V-0 色およびローハロゲン対応：SHEET2参照 PBT UL94V-0 COLOR AND LOW-HALOGEN:SEE SHEET 2.

13.75	18.45	24
12.5	17.2	22
11.25	15.95	20
10	14.7	18
8.75	13.45	16
7.5	12.2	14
6.25	10.95	12
5	9.7	10
3.75	8.45	8
B	A	極数 CIRCUIT SIZE

THIS DRAWING CONTAINS INFORMATION THAT IS PROPRIETARY TO MOLEX ELECTRONIC TECHNOLOGIES, LLC AND SHOULD NOT BE USED WITHOUT WRITTEN PERMISSION

DIMENSION UNITS	SCALE
mm	NTS

GENERAL TOLERANCES (UNLESS SPECIFIED)

ANGULAR TOL	±	3.0 °
4 PLACES	±	0.2
3 PLACES	±	0.2
2 PLACES	±	0.2
1 PLACE	±	0.2
0 PLACES	±	0.2

DRAFT WHERE APPLICABLE MUST REMAIN WITHIN DIMENSIONS

CURRENT REV DESC:

EC NO: 761705
DRWN: SOKUMURA01 2023/07/25
CHK'D: SAKIYAMA 2023/09/15
APPR: AIDA 2023/09/15

INITIAL REVISION:
DRWN: RTANAKA02 2020/05/13
APPR: AIDA 2022/11/28

THIRD ANGLE PROJECTION | DRAWING: A3-SIZE | SERIES: 214527

molex

MICRO-LOCK PLUS 1.25
DUAL ROW RECEPTACLE HOUSING TPA TYPE

PRODUCT CUSTOMER DRAWING

DOCUMENT NUMBER	DOC TYPE	DOC PART	REVISION
2145270000-SD	PSD	000	B

MATERIAL NUMBER	CUSTOMER	SHEET NUMBER
SEE SHEET 2	GENERAL	1 OF 2

DOCUMENT STATUS	P1	RELEASE DATE	2023/09/15 07:11:24

FORMAT: master-tb-prod-A3
REVISION: J1
DATE: 2021/05/01

製品形状
PRODUCT SHAPE

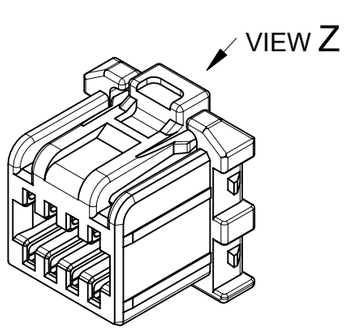

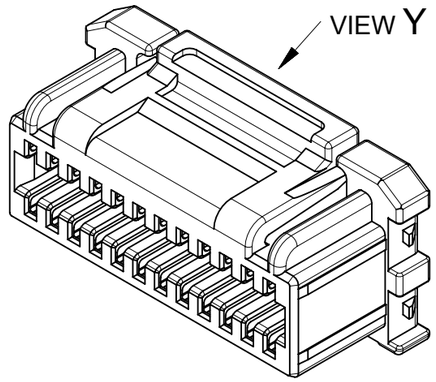

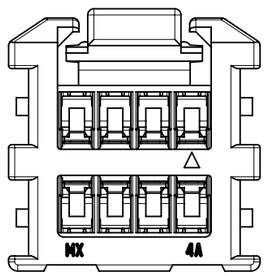

VIEW Z

8-14極
8-14 CIRCUIT

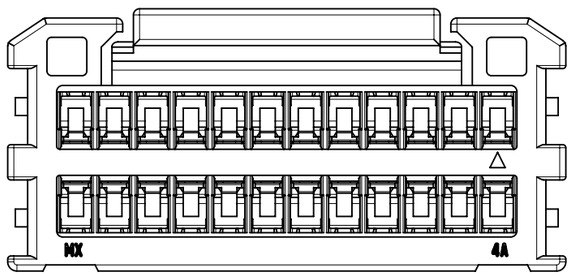

VIEW Y

16-24極
16-24 CIRCUIT

△3 適合製品及び各種仕様書
APPLICABLE PRODUCTS AND VARIOUS SPECIFICATIONS

梱包仕様書 PACKAGING SPECIFICATION	SPECIFICATION NUMBER
	2145279200-SPK PS 200

適合端子 APPLICABLE CRIMP TERMINAL	PART NUMBER	PLATING TYPE	WIRE SIZE(AWG)
	5054311000 NOT APPLICABLE TO RETAINER	TIN	#26-30
	2145291000 APPLICABLE TO RETAINER	TIN	

適合リテーナー APPLICABLE RETAINER	SERIES NUMBER
	214528

SMT

適合嵌合相手 MATE WITH	タイプ TYPE	TIN PLATING				
		VERTICAL	RIGHT ANGLE	VERTICAL	RIGHT ANGLE	VERTICAL (FOR POTTING)
		8-24 CIRCUIT				8-14 CIRCUIT
	シリーズ番号 SERIES NUMBER	505433	505448	204520	204519	207760
	ローハロゲン対応 LOW HALOGEN COMPLIANT	NOT COMPLIANT		COMPLIANT		COMPLIANT (NATURAL, BLACK)
製品仕様書 PRODUCT SPECIFICATION		2145270000-PS PS 000				2145270001-PS PS 000
コネクタ取扱説明書 APPLICATION SPECIFICATION		5054320000-AS PS 000				

製品嵌合図は各"適合嵌合相手"図面参照のこと
MATING VIEW : REFER TO EACH "MATE WITH" PART DRAWING.

△4 214527**0* 発注番号一覧 ORDER NUMBER LIST

NOT COMPLIANT		COMPLIANT		LOW-HALOGEN
BLUE	RED	BLACK	NATURAL(WHITE)	HOUSING COLOR
2145272404	2145272402	2145272401	2145272400	24
2145272204	2145272202	2145272201	2145272200	22
2145272004	2145272002	2145272001	2145272000	20
2145271804	2145271802	2145271801	2145271800	18
2145271604	2145271602	2145271601	2145271600	16
2145271404	2145271402	2145271401	2145271400	14
2145271204	2145271202	2145271201	2145271200	12
2145271004	2145271002	2145271001	2145271000	10
2145270804	2145270802	2145270801	2145270800	8
発注番号 ORDER NUMBER				極数 CIRCUIT SIZE
梱包形態：ポリ袋 PACKAGING : POLYBAG PACKAGE				

THIS DRAWING CONTAINS INFORMATION THAT IS PROPRIETARY TO MOLEX ELECTRONIC TECHNOLOGIES, LLC AND SHOULD NOT BE USED WITHOUT WRITTEN PERMISSION

DIMENSION UNITS	SCALE
mm	NTS

GENERAL TOLERANCES (UNLESS SPECIFIED)

ANGULAR TOL	±	3.0 °
4 PLACES	±	0.2
3 PLACES	±	0.2
2 PLACES	±	0.2
1 PLACE	±	0.2
0 PLACES	±	0.2

DRAFT WHERE APPLICABLE MUST REMAIN WITHIN DIMENSIONS

CURRENT REV DESC:

EC NO: 761705
DRWN: SOKUMURA01 2023/07/25
CHK'D: SAKIYAMA 2023/09/15
APPR: AIDA 2023/09/15

INITIAL REVISION:
DRWN: RTANAKA02 2020/05/13
APPR: AIDA 2022/11/28

THIRD ANGLE PROJECTION | DRAWING: A3-SIZE | SERIES: 214527

molex

MICRO-LOCK PLUS 1.25
DUAL ROW RECEPTACLE HOUSING TPA TYPE

PRODUCT CUSTOMER DRAWING

DOCUMENT NUMBER	DOC TYPE	DOC PART	REVISION
2145270000-SD	PSD	000	B

MATERIAL NUMBER	CUSTOMER	SHEET NUMBER
SEE SHEET 2	GENERAL	2 OF 2

DOCUMENT STATUS	P1	RELEASE DATE	2023/09/15 07:11:24

FORMAT: master-tb-prod-A3
REVISION: J1
DATE: 2021/05/01

Unikeyic Electronics

Global Electronic Components Distributor

Click to view pricing, inventory, delivery, and lifecycle information:

molex:

347910140 0194360214 0464363133 528523070 348268126 197134001 351820290 464373005
194290039 5023860371 349672001 357470310 528061110 348242245 0477256010 194270031
197054301 34708-2028 194290026 502380-0800 347928042 0351510214 355240920 502584-0870
502584-1060 528520870 347072012 502585-0370 459850483 503988100