

KISSLING E-STOP

Series ES - from TE Connectivity (TE)

Quality Safety Switch

It doesn't matter whether you call it an e-stop, emergency stop, emergency switch or e-stop switch, we have the right switch for your application. Our selection of sealed safety and emergency stop (e-stop) switches have been designed and manufactured to the highest quality standards. In addition to classic applications on emergency vehicles, work trucks, off road equipment and heavy machinery, the e-stop application area also covers the complete e-mobility market including charging stations.

Compact, sealed and ruggedize

The ES series is a compact, sealed and ruggedized switch with small dimensions and a high resistance to shock, vibration, dust and moisture. These characteristics are important for safe and reliable switching. Thanks to our IP6K9K sealed switch, no additional protection such as a box or enclosure is required. It is a plug and play system which can be used in hazardous environments. Safety related switching applications are no place to compromise on quality.

Features

- Sealed housing conforms to IP6K9K
- 1-, 2- and 3-pole versions NO/NC
- 2-pole change-over version
- Continuous current up to 10 A
- Up to 40.000 cycles mechanical life

Applications

- E-mobility charging station
- Commercial vehicles
- Off-Road vehicles
- Lifting vehicles
- Construction and agricultural vehicles
- Hydraulic systems
- Remote control panels

Specification

Technical Data

Protection	IEC 60529 IP67 and IP6K9K
Temperature range	-40°C to +85°C
Material terminals	CuZn
Thread sizes / Torque	M30 x 1,5 = max. 6Nm

Mechanical Data (Change-over)

Locking	EN 60947-5-5
Positive opening operation	EN 60947-5-5
Operating force	20 - 50N
Torque knob max.	3Nm
Current carrying parts	Cu-alloy
Contact material	Ag-alloy
Mechanical life	40.000 cycles
Frequency	max. 100/min.

Electrical data

Voltage range	9-32VDC
Nominal voltage	12VDC / 24VDC
Dielectric withstanding voltage	1050VAC up to 1min.
Contact resistance	max. 50mΩ
Insulation resistance	> 100MΩ at 500VDC
Continuous current	10mA - 10A
Current max.	10.1A
Switching capacity min.	12VDC, 10mA
Short circuit protection	Automotive fast-acting fuse 10A

Accessories

Description		Part Number	
Actuation protection		24-63-029	
Symbol label		24-63-024 de/en	24-63-040 blank



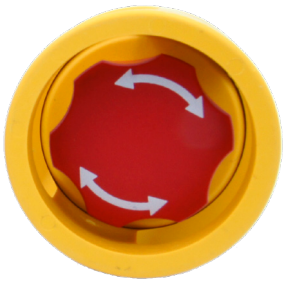

Technical drawings

Product sample ES-2012-T111

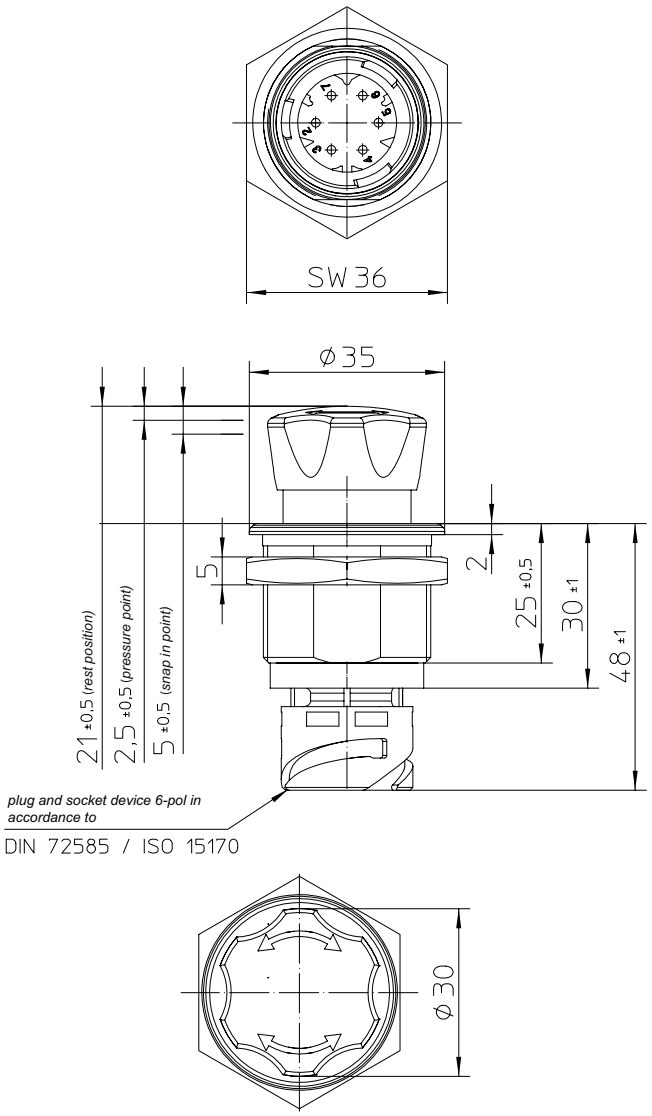

Product sample ES-2012-T112

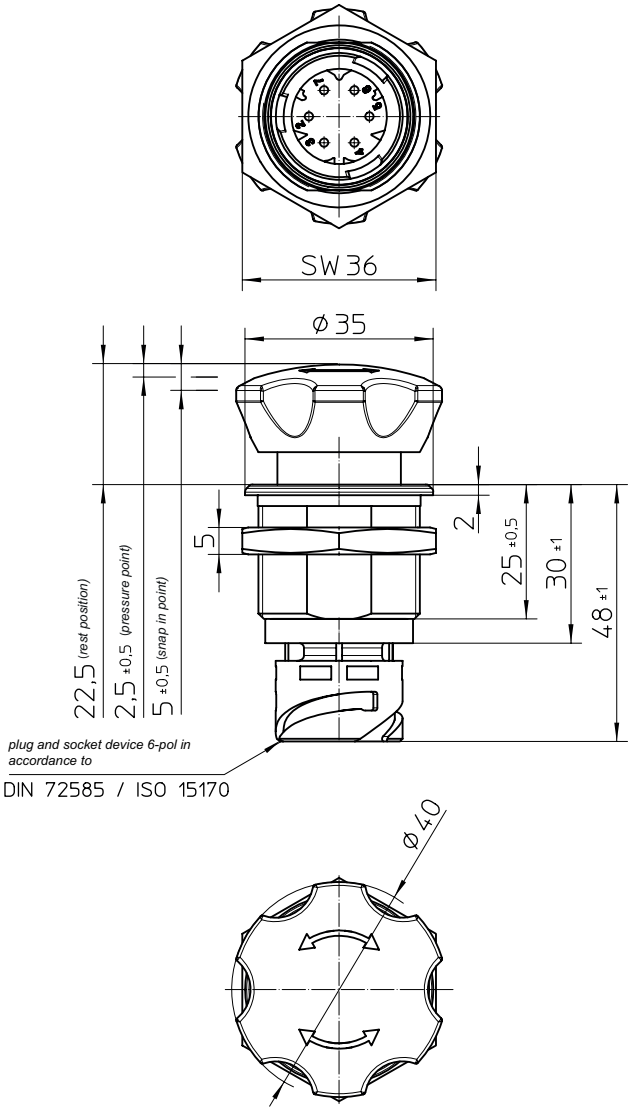

Connectors

Bayonet connection
DIN 72585/ ISO 15170-A1-2.1-Ag/K1

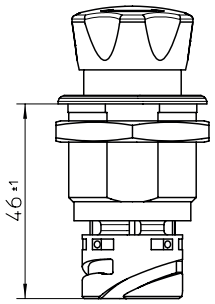

FASTON connection

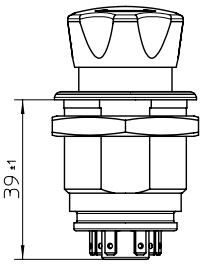

Cable connection axial

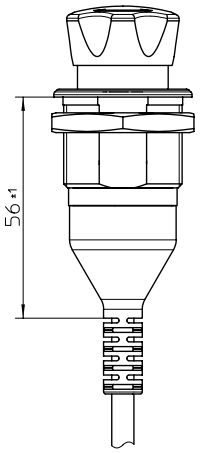

Cable connection laterally

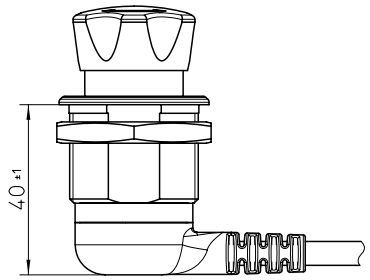

Ordering Information

Part Number
example: ES - 2 003-T412-020 C
ES - _ ___-_ _ _ _- ___ _

Housing

2	Central thread

Switching Funktion

# Pin	amount NO/NC contacts (3 Pin) 1/2
# Pin	amount NO contacts (2 Pin) 1 - 3
# Pin	amount NC contacts (2 Pin) 1 - 3

* Bayonet Connection = max. 6 Pins / Faston Connection = max. 7 Pins

Actuator Symbol

T	arrow
A	motor

Connector Information

_	on request

Cable length (in cm)

___	on request

Actuator size

1	30 Ø
2	40 Ø

Illumination

1	no
2	yes

Connector

1	plug and socked device
2	FASTON connection
3	cable connection axial
4	cable connection laterally

Circuits

2 NC / 1 NO

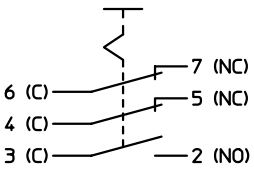

2 NO/NC Change-over

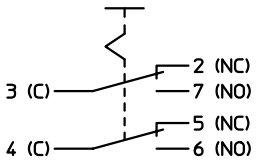

3 NC Backlit

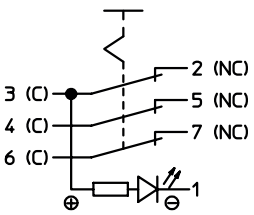

te.com

TE Connectivity, TE, TE connectivity (logo), FASTON and KISSLING (word) are trademarks owned or licensed by the TE Connectivity family of companies. All other logos, products and/or company names referred to herein might be trademarks of their respective owners.

The information given herein, including drawings, illustrations and schematics which are intended for illustration purposes only, is believed to be reliable. However, TE Connectivity makes no warranties as to its accuracy or completeness and disclaims any liability in connection with its use. TE Connectivity's obligations shall only be as set forth in TE Connectivity's Standard Terms and Conditions of Sale for this product and in no case will TE Connectivity be liable for any incidental, indirect or consequential damages arising out of the sale, resale, use or misuse of the product. Users of TE Connectivity products should make their own evaluation to determine the suitability of each such product for the specific application.

© 2020 TE Connectivity | All Rights Reserved.
K1166720 | Version 08/2020

Unikeyic Electronics

Global Electronic Components Distributor

Click to view pricing, inventory, delivery, and lifecycle information:

TE Connectivity:

2834055-1 35402K7FT 36161 1-794222-0 3-1393225-0 352116RFT 650075-000 CRGCQ0805F150R 1488167-1 1743455-2 1MM-HU-D10-VS-00-F-TBP 2-292161-3 2-520103-2 281990-2 292230-8 640174-1 141991-2 936348-1 1969656-1 2-32562-2 2-520128-2 3430B2F51RTDF 917696-1 CRGCQ2010J3K3 SMV3W5M6JT 1-1743284-2 917790-2 1393431-1 2377783-2 SMW73R0JT