# RF/Coaxial Cable Assembly
## SMA, RG316, 152.4mm

### Specifications:

Frequency Range : 0 to 3GHz VSWR : ≤1.3
Insertion Loss : ≤0.5db
Body : Brass Nickel
Centre contact : Brass Gold
Insulator : PTFE

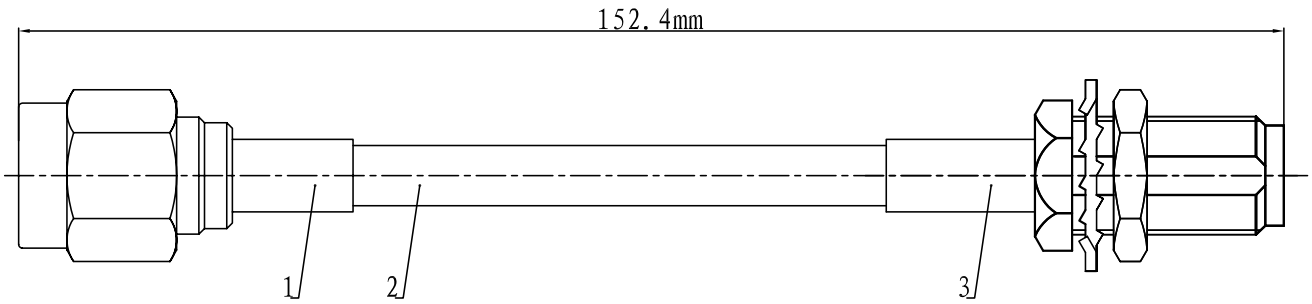


| No. | Description | Qty. |
|---|---|---|
| 1 | SMA-KY3 | 1 |
| 2 | RG316 | |
| 3 | SMA-JW3 | |

### Part Number Table

| Description | Part Number |
|---|---|
| SMA Right Angle Plug to SMA Straight Bulkhead Jack, RG316, 152.4mm | MC001057 |

**Important Notice :** This data sheet and its contents (the "Information") belong to the members of the Premier Farnell group of companies (the "Group") or are licensed to it. No licence is granted for the use of it other than for information purposes in connection with the products to which it relates. No licence of any intellectual property rights is granted. The Information is subject to change without notice and replaces all data sheets previously supplied. The Information supplied is believed to be accurate but the Group assumes no responsibility for its accuracy or completeness, any error in or omission from it or for any use made of it. Users of this data sheet should check for themselves the Information and the suitability of the products for their purpose and not make any assumptions based on information included or omitted. Liability for loss or damage resulting from any reliance on the Information or use of it (including liability resulting from negligence or where the Group was aware of the possibility of such loss or damage arising) is excluded. This will not operate to limit or restrict the Group's liability for death or personal injury resulting from its negligence. Multicomp is the registered trademark of the Group. © Premier Farnell plc 2012.

# Unikeyic Electronics

Global Electronic Components Distributor

Click to view pricing, inventory, delivery, and lifecycle information:

## multicomp:

MCWR08X39R0FTL MUR1540 2213R-24G CF06332T/4/10 MC0603N100J201CT MC34747 MCAL0410A1-471KU MC-SVT1-S06-G MC34589 MCSDC0603-560KU SPC19989 MCMR08X2000FTL MP005415 MP006964 SMAJ160A-13-F CMS-DF-1825 MC0402WGF499JTCE MC0603N100F500CT MC36427 MC0603B393K500CT MCLPR50V478M30X25 MCMF0W4FF8202A50 MCSR08X3300FTL CFS-TF-1818 MCSDRH73B-681MHF MP006937 MCMET 800MA 250V MCMR06X1004FTL MCMR50V335M4X7 MCWF12R7150BTL