THIS DRAWING IS UNPUBLISHED. RELEASED FOR PUBLICATION 2007
© COPYRIGHT 2007 BY - ALL RIGHTS RESERVED.

| LOC | DIST |
|---|---|
| AD | 00 |

REVISIONS

| P | LTR | DESCRIPTION | DATE | DWN | APVD |
|---|---|---|---|---|---|
| | D | REVISED PER ECO-13-002771 | 19MAR2013 | KH | RP |

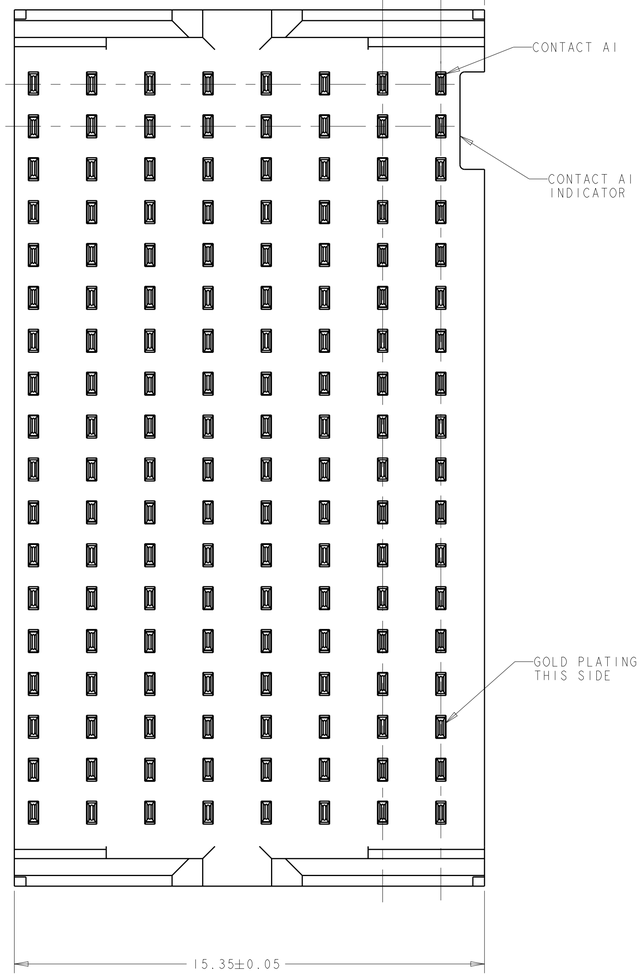


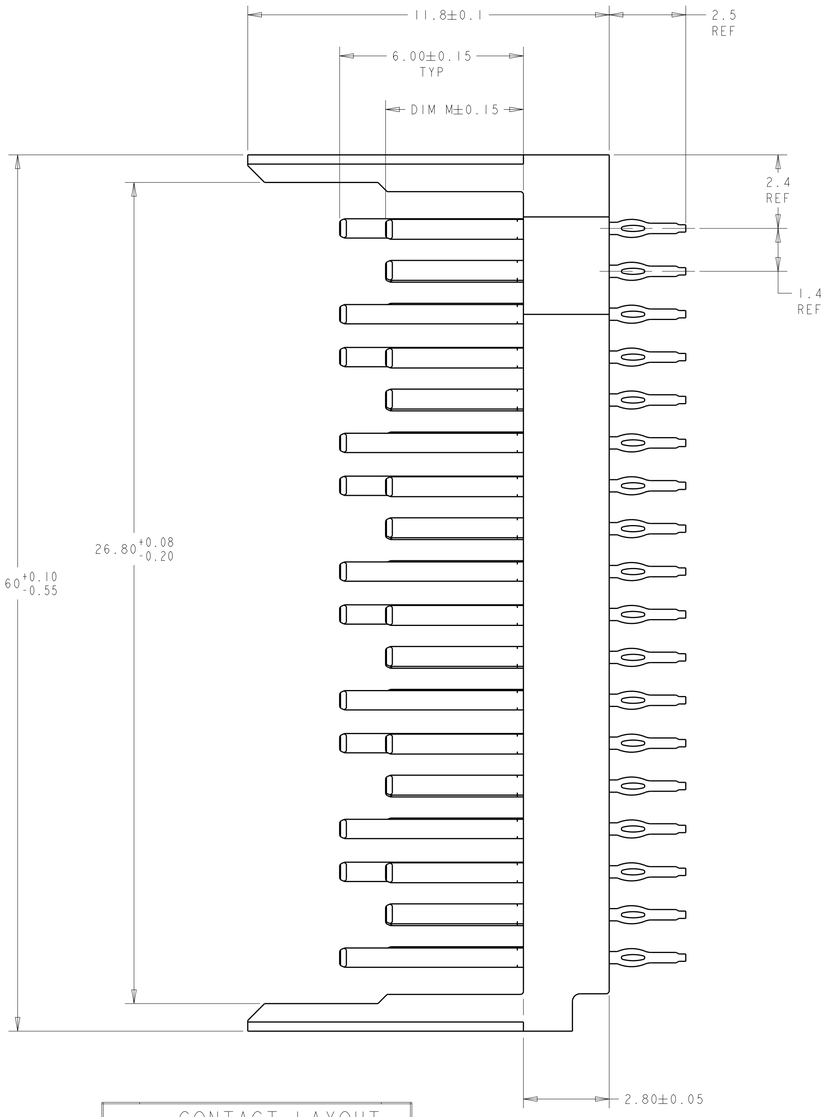


1. MATERIAL:
   CONTACT - PHOS BRONZE
   HOUSING - LCP, UL 94V-0, COLOR - BLACK

2. FINISH:
   CONTACT AREA FINISH CONFORMS TO THE REQUIREMENTS OF TE PRODUCT SPECIFICATION 108-2303; BASED ON TELCORDIA GR-1217-CORE FOR SYSTEM QUALITY LEVEL III APPLICATIONS IN CONTROLLED ENVIRONMENTS (CENTRAL OFFICE).
   COMPLIANT PIN AREA- 0.5µm MIN MATTE TIN OVER 1.27µm MIN NICKEL.

3. CONNECTOR MARKED WITH PART NUMBER, DATE CODE AND STANDARD IN APPROXIMATE AREA SHOWN

4. DATUMS AND BASIC DIMENSIONS ESTABLISHED BY CUSTOMER.

5. CONTACT AREA LUBRICATED WITH BELLCORE APPROVED LUBRICANT. TECHNICAL REFERENCE GR-1217-CORE, ISSUE 1, NOVEMBER 1995.

6. REFERENCE APPLICATION SPEC 114-13202 FOR RECOMMENDED PLATED THRU HOLE DIAMETER AND PLATING THICKNESSES.

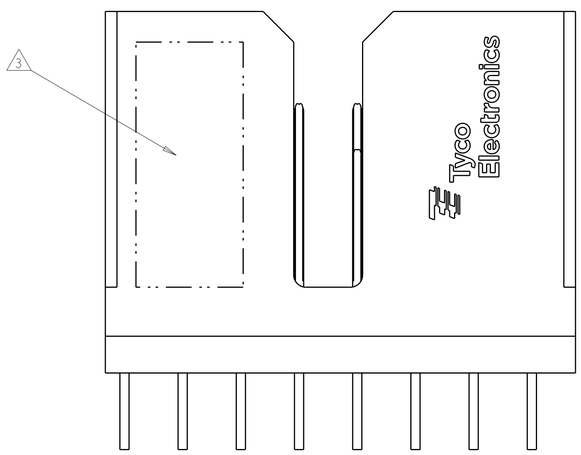


CONTACT LAYOUT
A = 4.50mm (DIM M)
B = 3.70mm (DIM M)
G = GROUND 6.00mm

| ROWS | COLUMNS 8 | 7 | 6 | 5 | 4 | 3 | 2 | 1 |
|---|---|---|---|---|---|---|---|---|
| A | G | A | G | A | G | A | G | A |
| B | A | A | A | A | A | A | A | A |
| C | A | G | A | G | A | G | A | G |
| D | G | A | G | A | G | A | G | A |
| E | A | A | A | A | A | A | A | A |
| F | A | G | A | G | A | G | A | G |
| G | G | A | G | A | G | A | G | A |
| H | A | A | A | A | A | A | A | A |
| I | A | G | A | G | A | G | A | G |
| J | G | A | G | A | G | A | G | A |
| K | A | A | A | A | A | A | A | A |
| L | A | G | A | G | A | G | A | G |
| M | G | A | G | A | G | A | G | A |
| N | A | A | A | A | A | A | A | A |
| O | A | G | A | G | A | G | A | G |
| P | G | A | G | A | G | A | G | A |
| Q | B | A | A | A | A | A | A | A |
| R | B | G | A | G | A | G | A | G |

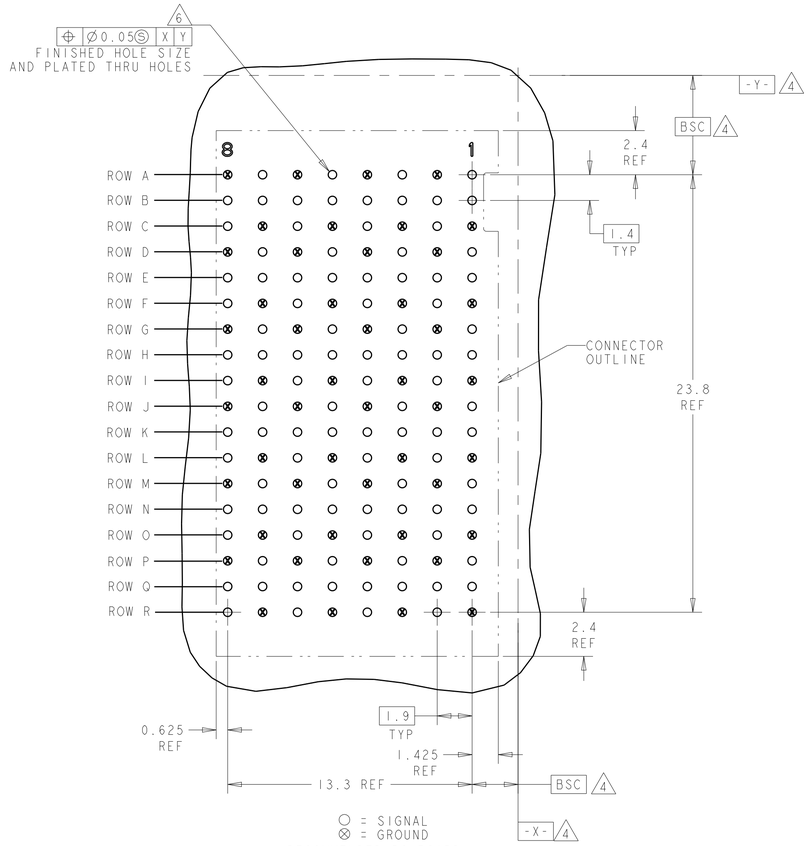


○ = SIGNAL
⊗ = GROUND
RECOMMENDED PC BOARD LAYOUT BACKPLANE, COMPONENT SIDE SHOWN
SCALE 6:1

1934914-1
PART NUMBER

THIS DRAWING IS A CONTROLLED DOCUMENT.

DIMENSIONS: mm

TOLERANCES UNLESS OTHERWISE SPECIFIED:
0 PLC ±
1 PLC ±
2 PLC ±
3 PLC ±
4 PLC ±
ANGLES ±

MATERIAL - 1
FINISH - 2

DWN B.CARBO 25MAR2008
CHK R.PATTERSON 25MAR2008
APVD R.PATTERSON 25MAR2008
PRODUCT SPEC -
APPLICATION SPEC -
WEIGHT -

TE Connectivity

NAME HEADER ASSEMBLY, OPEN ENDED, 6 PAIR 8 COLUMN, TinMan SELECT LOAD

| SIZE | CAGE CODE | DRAWING NO | RESTRICTED TO |
|---|---|---|---|
| A1 | 00779 | C-1934914 | - |

CUSTOMER DRAWING | SCALE 10:1 | SHEET 1 OF 1 | REV D

# Unikeyic Electronics

Global Electronic Components Distributor

Click to view pricing, inventory, delivery, and lifecycle information:

## TE Connectivity:

1-794222-0 1393431-1 141991-2 2310537-1 175977-2 1903112-2 650075-000 SBCHE154R7K 1743455-2 3631B101LL TE50BR39J 2380312-2 3-1393225-0 936348-1 RH73H2A40MKTN ROX05SJ18R U5254-000005-030PA 2005330-1 CRGCQ2010J3K3 1969656-1 2-292161-3 2377783-2 3430B2F51RTDF CPF0402B37K4E1 MPT100C18RF SBCHE64R7K SMW73R0JT 1-962915-1 917696-1 2834055-1