Features and Benefits

- Magnetic technology offers robust performance.
- 100% Non-contacting design (no bearings or bushing) provides an extremely long life expectancy and is tolerant to harsh environments.
- Simple two piece design (target magnet + encoder) for easy alignment and installation.
- Bi-directional two channel incremental quadrature output. Option for differential RS422 compatible output.
- Mounting holes for a 2-bolt pattern 1.280 inch B.C. x 0.090 inch O.D.
- Target magnet for standard shaft sizes from 2 mm to 1/2 inch. Custom bore size available.
- Options for 256, 512, and 1024 pulse per channel per revolution.
- Customizable lead wires, cables, and or connectors.

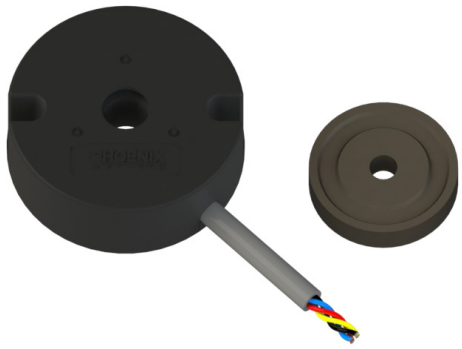

Kit - Encoder with Target Magnet

Shown with shaft pass through hole and single ended wiring
Wire color order varies with part configuration

Application Example

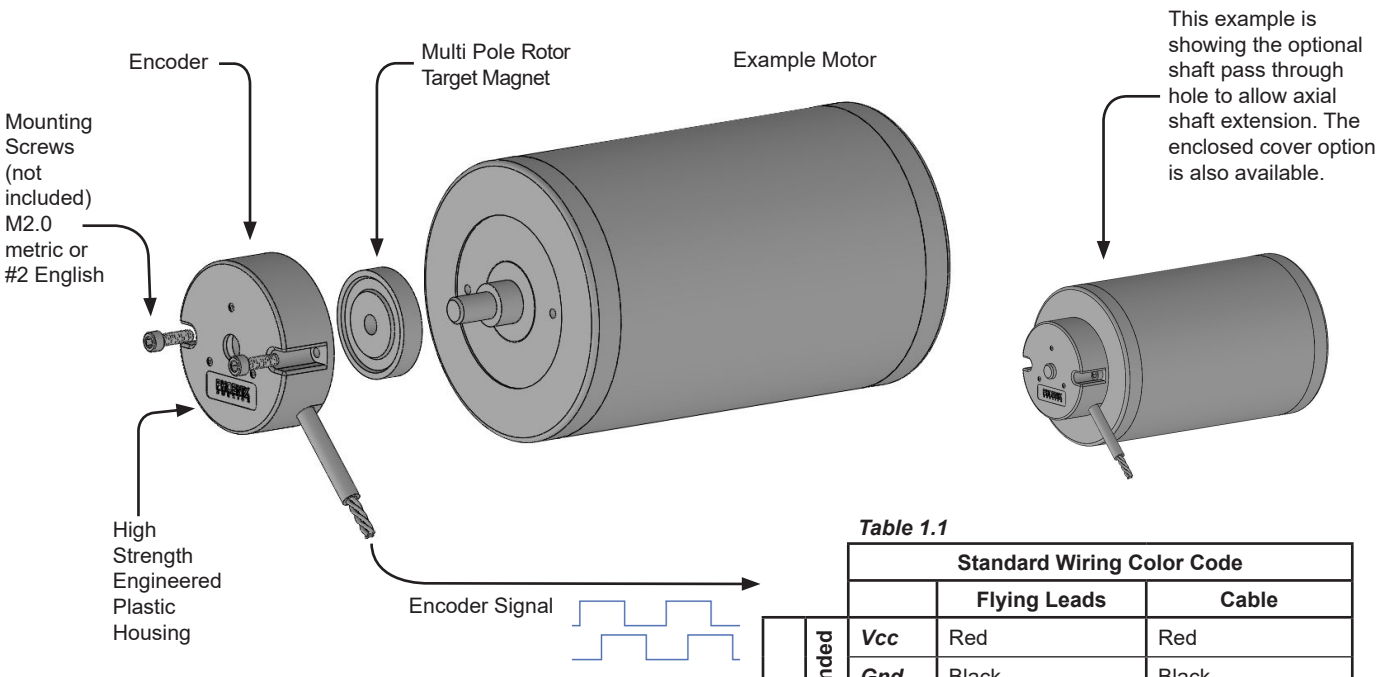

Table 1.1

			Standard Wiring Color Code	
			Flying Leads	**Cable**
Differential	**Single Ended**	***Vcc***	Red	Red
		Gnd	Black	Black
		Ch A	Yellow	Brown
		Ch B	Blue	Orange
		Ch A-	Brown	Yellow
		Ch B-	Orange	Green

Other colors available upon request.
Contact sales@phoenixamerica.com.

Phoenix America, INC
4717 Clubview Drive
Fort Wayne, IN 46804

Tel: (888)-801-1422
Local: (260)-432-9664
Fax: (260)-432-9967

www.phoenixamerica.com
sales@phoenixamerica.com
© Copyright PAI 2017 Rev. 8/1/2017

Electrical Circuit

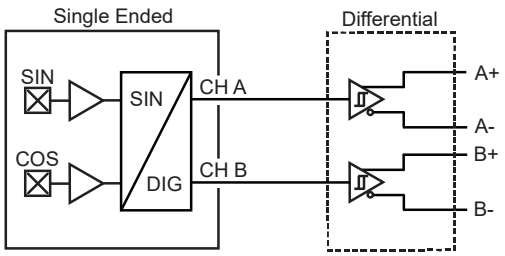

Absolute Maximum Ratings

Table 2.1

Characteristic	Symbol	Rating for 5V	Rating for 6V to 25V	Units
Forward Supply Voltage	V_{CC}	6	30	V
Reverse Supply Voltage	V_{RCC}	-0.3	-20	V
Storage Temperature	T_S	150	150	ºC
ESD (HMB, 100pF/1.5Kohm)		2	2	kV

Specifications - 5V Supply

Table 2.2

Characteristic	Symbol	Test Conditions	Min.	Typ.	Max.	Unit
Supply Voltage	V_{CC}	Operating, T_J < 165 ºC	4.75	5	5.5	V
Supply Current	I_{CC}	V_{CC} = 12V	-	14	20	mA
Operating Temperature	T_A		-40	-	125	ºC
Duty Cycle	-		40	50	60	%
Phase	-		70	90	110	ºe
Output Frequency	f_{out}		-	-	42	kHz

Specifications - 24V Supply

Table 2.3

Characteristic	Symbol	Test Conditions	Min.	Typ.	Max.	Unit
Supply Voltage	V_{CC}	Operating, T_J < 165 ºC	5.25	12	24	V
Supply Current	I_{CC}	V_{CC} = 12V	-	-	-	mA
Operating Temperature	T_A		-40	-	125	ºC
Duty Cycle	-		40	50	60	%
Phase	-		70	90	110	ºe
Output Frequency	f_{out}		-	-	42	kHz

Phoenix America, INC
4717 Clubview Drive
Fort Wayne, IN 46804

Tel: (888)-801-1422
Local: (260)-432-9664
Fax: (260)-432-9967

www.phoenixamerica.com
sales@phoenixamerica.com
© Copyright PAI 2017 Rev. 8/1/2017

Output Waveforms

Single Ended

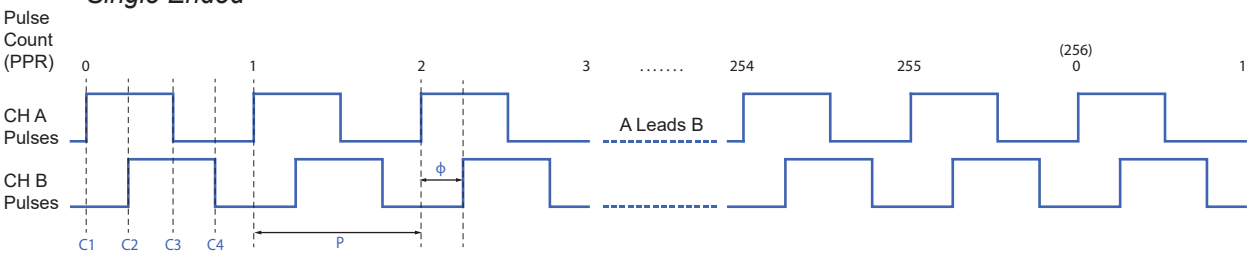

Key:
C - Count
P - Pulse
ϕ - Phase
1 PPR = 4 Counts
1 Pulse = 360°e

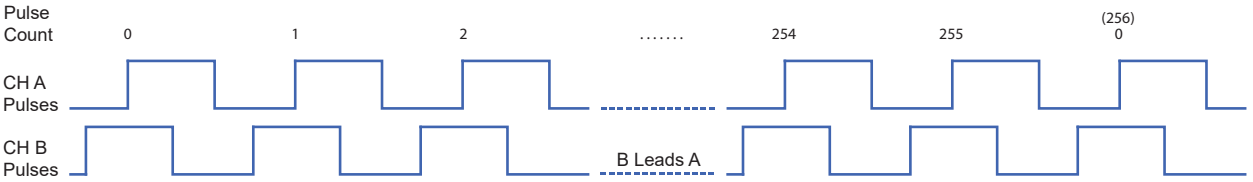

Differential

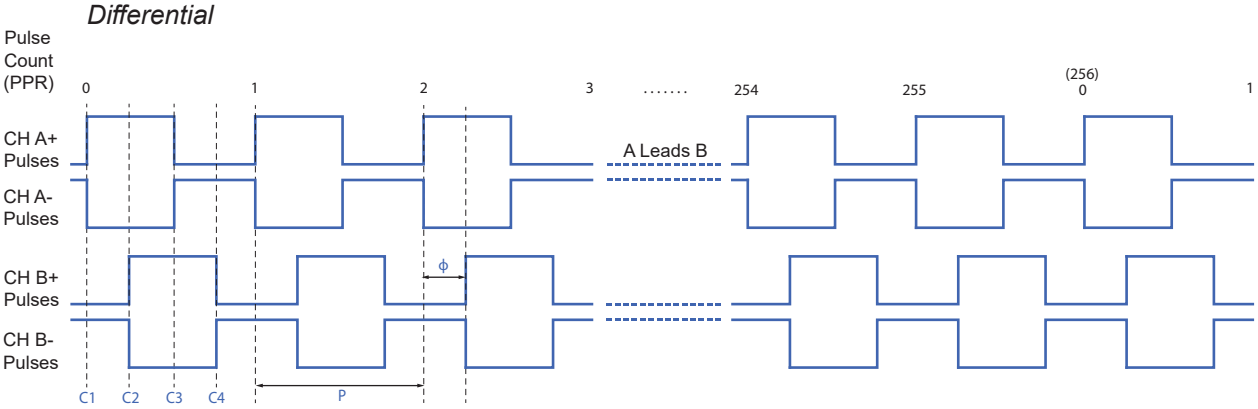

Key:
C - Count
P - Pulse
ϕ - Phase
1 PPR = 4 Counts
1 Pulse = 360°e

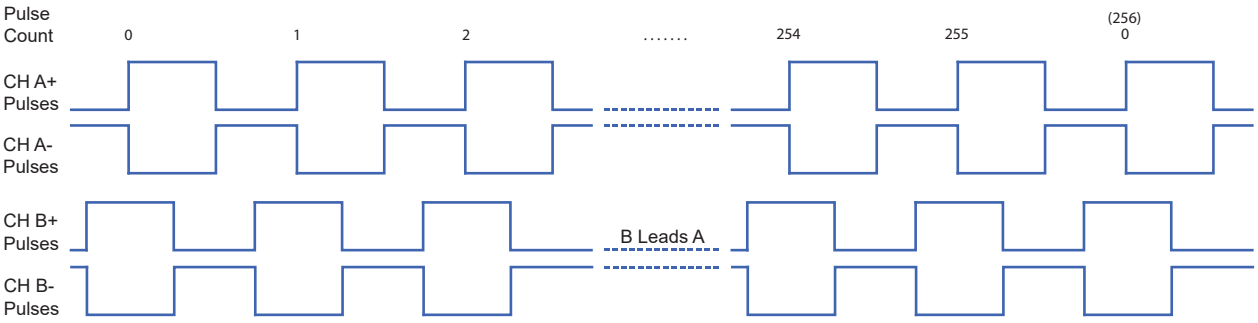

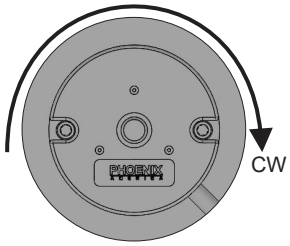

Channel A leads Channel B for clockwise shaft rotation (shaft rotation is defined when looking at the branded face of the encoder).

Phoenix America, INC
4717 Clubview Drive
Fort Wayne, IN 46804

Tel: (888)-801-1422
Local: (260)-432-9664
Fax: (260)-432-9967

www.phoenixamerica.com
sales@phoenixamerica.com
© Copyright PAI 2017 Rev. 8/1/2017

Encoder Physical Outline

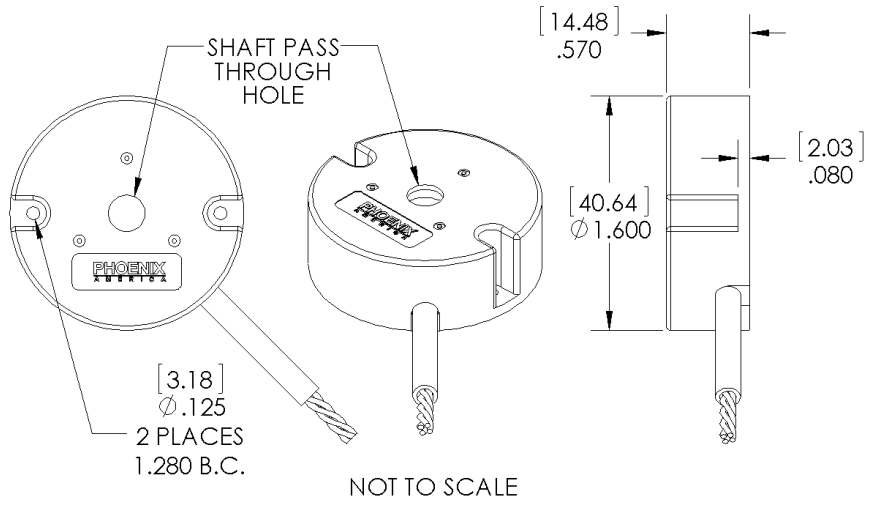

Table 4.1

Motor Shaft Diameter	Shaft Pass Through Hole Size (options/ recommendation)	
-	No Hole	
2 mm	2.06 mm	0.081 in
3 mm	3.06 mm	0.120 in
1/8 in	3.26 mm	0.127 in
5/32 in	4.06 mm	0.160 in
4 mm	4.06 mm	0.160 in
3/16 in	4.83 mm	0.190 in
5 mm	5.06 mm	0.199 in
6 mm	6.06 mm	0.239 in
1/4 in	6.40 mm	0.252 in
7 mm	7.06 mm	0.278 in
5/16 in	8.05 mm	0.317 in
8 mm	8.05 mm	0.317 in
3/8 in	9.59 mm	0.378 in
10 mm	10.06 mm	0.396 in
12 mm	12.06 mm	0.475 in
1/2 in	12.76 mm	0.502 in

Other shaft pass through hole sizes available upon request. Contact sales@phoenixamerica.com.

Encoder Mounting Guidelines

Concentricity of the encoder housing to the magnet rotor is critical for optimal encoder performance. Considering the following during the design phase will ensure concentricity and ease of assembly.

- Tight molding tolerances allow for the outside diameter of the encoder to be used to locate the encoder housing concentric to the motor shaft and magnet rotor. A machined pocket on the motor endbell works well for alignment. Recommended pocket is 0.015” to 0.020” deep and 1.62” in diameter.
- Extending the shaft through the optional shaft pass through hole is an easy way to align the encoder housing to the motor shaft and magnet rotor. Simply position the encoder so that the shaft is centered concentrically in the shaft pass through hole.
-

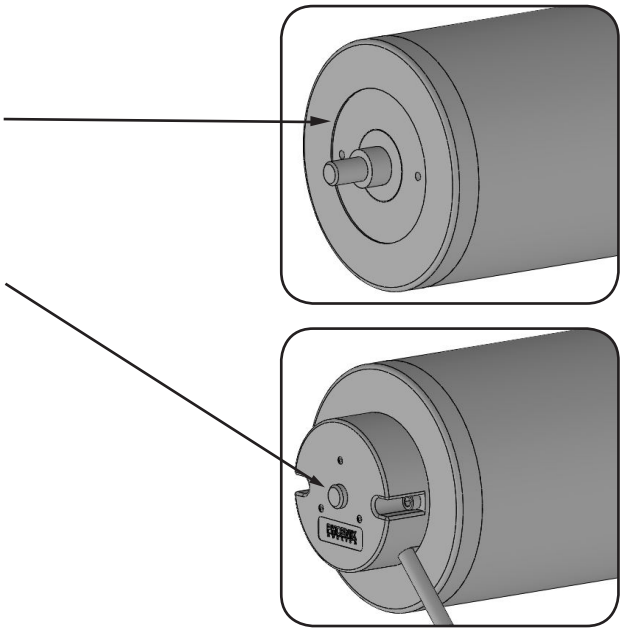

Phoenix America, INC
4717 Clubview Drive
Fort Wayne, IN 46804

Tel: (888)-801-1422
Local: (260)-432-9664
Fax: (260)-432-9967

www.phoenixamerica.com
sales@phoenixamerica.com
© Copyright PAI 2017 Rev. 8/1/2017

Target Rotor Physical Outline - Molded (Mounting Style A)

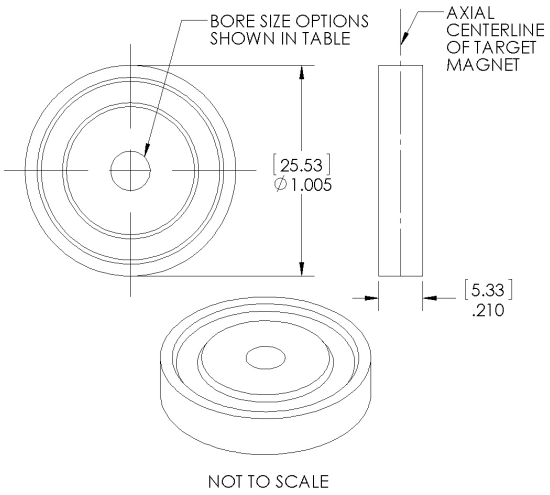

Table 5.1

Bore Size (.inch)	Motor Shaft OD Size (nominal)	NEMA Guide Shaft Tolerance	Magnet Bore MIN. (inch)	Magnet Bore MAX. (inch)
079	2 mm (.0787”)	+0.0000”/-0.0005”	.0777	.0807
118	3 mm (.1181”)		.1171	.1201
125	1/8 in (.1250”)		.1240	.1270
156	5/32 in (.1563”)		.1553	.1583
157	4 mm (.1575”)		.1565	.1595
188	3/16 in (.1875”)		.1865	.1895
197	5 mm (.1969”)		.1959	.1989
236	6 mm (.2364”)		.2354	.2384
250	1/4 in (.2500”)		.2490	.2520
276	7 mm (.2758”)		.2747	.2777
313	5/16 in (.3125”)		.3115	.3145
315	8 mm (.3150”)		.3140	.3170
375	3/8 in (.3750”)		.3740	.3770
394	10 mm (.3940”)		.3930	.3960
473	12 mm (.4728”)		.4718	.4748
500	1/2 in (.5000”)		.4990	.5020

Other bore sizes available upon request.
Contact sales@phoenixamerica.com.

Target Rotor Mounting Guidelines - Molded (Mounting Style A) For Slip Fit Application

- Proper alignment of the target rotor to the encoder sensing element is critical for optimal encoder performance. Insure that the rotor is mounted to the specified height shown in the diagram below.
- A machined step on the motor shaft provides a quick and repeatable method for positioning the target rotor. Spacers or other fixturing should be used to properly position the rotor if no mechanical locating features are on the shaft.
- Various adhesives can be used to bond the target rotor to the motor shaft. Shaft alloys, operating environment, and shaft speed and acceleration should be taken into consideration when selecting an appropriate bonding agent. Loctite threadlockers and retaining compounds have proved effective in bonding the target rotor to the motor shaft. Loctite 263 and 2760 threadlockers and Loctite 638 and 680 retaining compounds are good candidates. These materials have been effective in past experience; testing under actual operating conditions should be used to qualify any bonding material.
- For best results, the motor shaft should be clean and free of any oils, lubricants, or solvents.
- Apply adhesive around the leading edge of the shaft and inside the hole in the rotor. Use a rotating motion when assembling the magnet to the shaft to insure good adhesive coverage.
- The use of primers and activators can be used to improve bond strength and cure rate.
- For non-critical applications or for fast bonding for evaluation, a cyanoacrylate adhesive (super glue) can be used. Loctite 401 and 410 have proven effective for quick bonding applications.

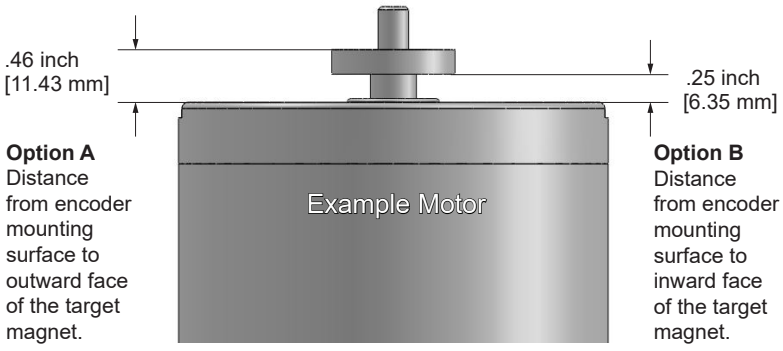

Option A
Distance from encoder mounting surface to outward face of the target magnet.

Option B
Distance from encoder mounting surface to inward face of the target magnet.

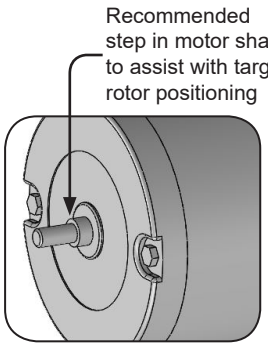

Phoenix America, INC
4717 Clubview Drive
Fort Wayne, IN 46804

Tel: (888)-801-1422
Local: (260)-432-9664
Fax: (260)-432-9967

www.phoenixamerica.com
sales@phoenixamerica.com
© Copyright PAI 2017 Rev. 8/1/2017

Target Rotor Physical Outline - Aluminum Hub (Mounting Style B)

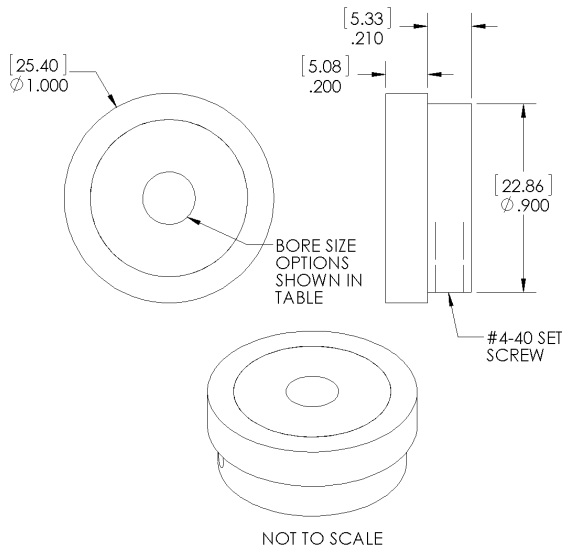

Table 6.1

Bore Size (.inch)	Motor Shaft OD Size (nominal)	NEMA Guide Shaft Tolerance	Magnet Bore MIN. (inch)	Magnet Bore MAX. (inch)
079	2 mm (.0787")	+0.0000"/-0.0005"	.0794	.0803
118	3 mm (.1181")		.1188	.1197
125	1/8 in (.1250")		.1257	.1266
156	5/32 in (.1563")		.1570	.1579
157	4 mm (.1575")		.1582	.1591
188	3/16 in (.1875")		.1882	.1891
197	5 mm (.1969")		.1976	.1985
236	6 mm (.2364")		.2371	.2380
250	1/4 in (.2500")		.2507	.2516
276	7 mm (.2758")		.2767	.2778
313	5/16 in (.3125")		.3134	.3145
315	8 mm (.3150")		.3159	.3170
375	3/8 in (.3750")		.3759	.3770
394	10 mm (.3940")		.3949	.3960
473	12 mm (.4728")		.4737	.4748
500	1/2 in (.5000")		.5009	.5020

Other bore sizes available upon request.
Contact sales@phoenixamerica.com.

Target Rotor Mounting Guidelines - Aluminum Hub (Mounting Style B)

- Proper alignment of the target rotor to the encoder sensing element is critical for optimal encoder performance. Insure that the rotor is mounted to the specified height shown in the diagram below.
- A machined step on the motor shaft provides a quick and repeatable method for positioning the target rotor. Spacers or other fixturing should be used to properly position the rotor if no mechanical locating features are on the shaft.
- While the hub is held in the proper position, use a .50 inch hex wrench to tighten #4-40 set screw.
- For permanent applications, a threadlocker or retaining compound is advised in conjunction with the set screw.

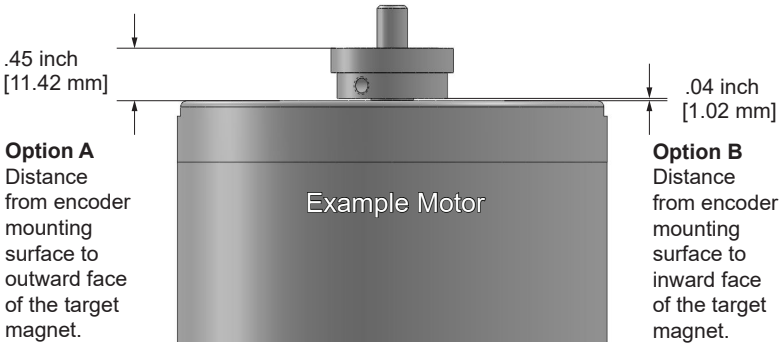

Option A
Distance from encoder mounting surface to outward face of the target magnet.

Option B
Distance from encoder mounting surface to inward face of the target magnet.

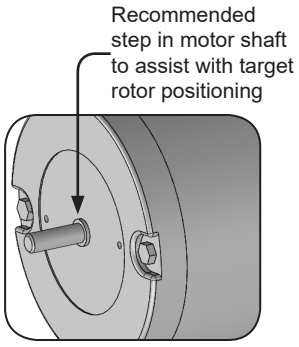

Phoenix America, INC
4717 Clubview Drive
Fort Wayne, IN 46804

Tel: (888)-801-1422
Local: (260)-432-9664
Fax: (260)-432-9967

www.phoenixamerica.com
sales@phoenixamerica.com
© Copyright PAI 2017 Rev. 8/1/2017

Target Rotor Physical Outline - Engineered Polymer Hub (Mounting Style H)

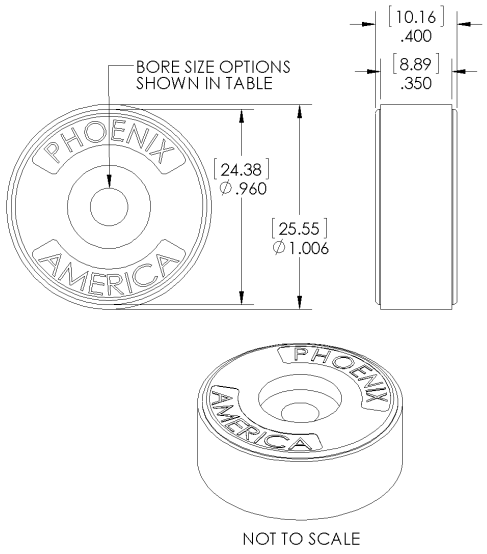

Table 7.1

Bore Size (.inch)	Motor Shaft OD Size (nominal)	NEMA Guide Shaft Tolerance	Magnet Bore MIN. (inch)	Magnet Bore MAX. (inch)
079	2 mm (.0787")	+0.0000"/-0.0005"	.0727	.0757
118	3 mm (.1181")		.1121	.1151
125	1/8 in (.1250")		.1190	.1220
156	5/32 in (.1563")		.1503	.1533
157	4 mm (.1575")		.1515	.1545
188	3/16 in (.1875")		.1815	.1845
197	5 mm (.1969")		.1909	.1939
236	6 mm (.2364")		.2304	.2334
250	1/4 in (.2500")		.2440	.2470
276	7 mm (.2758")		.2698	.2728
313	5/16 in (.3125")		.3065	.3095
315	8 mm (.3150")		.3090	.3120
375	3/8 in (.3750")		.3690	.3720
394	10 mm (.3940")		.3880	.3910
473	12 mm (.4728")		.4668	.4698
500	1/2 in (.5000")		.4940	.4970

Other bore sizes available upon request.
Contact sales@phoenixamerica.com.

Target Rotor Mounting Guidelines - Engineered Polymer Hub (Mounting Style H) For Press Fit Application

- Proper alignment of the target rotor to the encoder sensing element is critical for optimal encoder performance. Insure that the rotor is mounted to the specified height shown below.
- A machined step on the motor shaft provides a quick and repeatable method for positioning the target rotor. Spacers or other fixturing should be used if no mechanical locating features are on the shaft.
- A chamfered lead in on the shaft will aid in aligning the rotor.
- Prior to insertion, the motor shaft should be clean and free of any oils, lubricants, or solvents.
- Proper fixtures and support must be used to ensure the magnet is pressed on straight and aligned with the motor shaft.
- Opposite end of motor shaft should be supported to avoid undue stress on motor bearings during the pressing operation.
- In applications with high torque or environmental extremes, a retaining compound can be used to enhance the strength of the press fit.

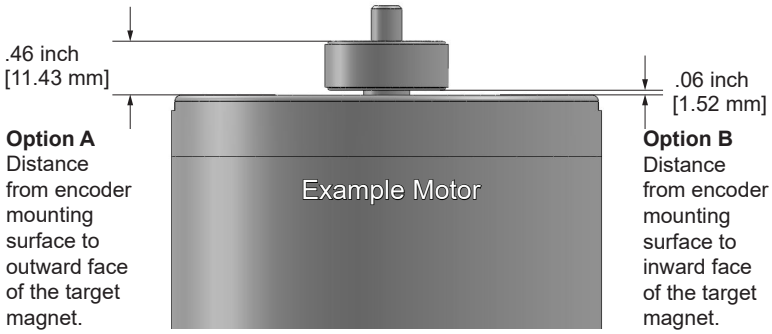

Option A
Distance from encoder mounting surface to outward face of the target magnet.

Option B
Distance from encoder mounting surface to inward face of the target magnet.

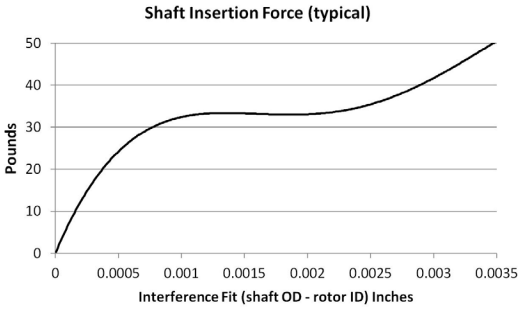

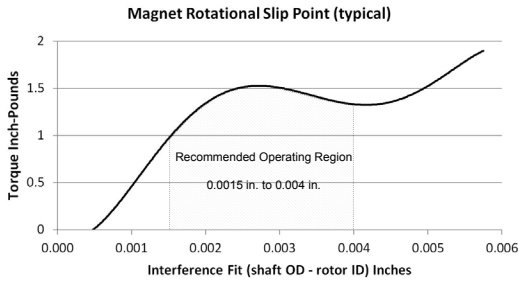

Phoenix America, INC
4717 Clubview Drive
Fort Wayne, IN 46804

Tel: (888)-801-1422
Local: (260)-432-9664
Fax: (260)-432-9967

www.phoenixamerica.com
sales@phoenixamerica.com
© Copyright PAI 2017 Rev. 8/1/2017

Wiring *(Single ended option depicted)*

FLYING LEADS

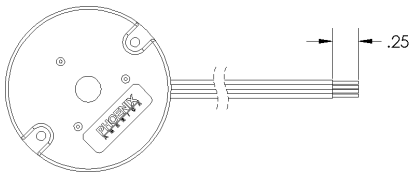

- 24 AWG
- 7x32 Strands, Tinned Copper
- PVC Insulation
- UL Type 1430
- Temperature Rating: 105ºC

CABLE

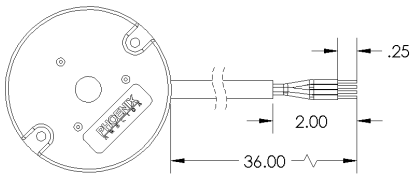

- 24 (or 26) AWG
- 4 (or 6) Conductor with Foil Shield and Drain
- Stranded Tinned Copper
- PVC Insulation
- Grey PVC Jacket
- UL Style 2464, CSA
- Temperature Rating: 105ºC

Table 8.1

Single Ended Wiring			
	Leads	**Cable**	**Connector Pin-Out**
Ch A	Yellow	Brown	1
Ch B	Blue	Orange	2
Gnd	Black	Black	3
Vcc	Red	Red	4

Differential Wiring			
	Leads	**Cable**	**Connector Pin-Out**
Ch B	Blue	Orange	1
Ch B-	Orange	Green	2
Ch A	Yellow	Brown	3
Ch A-	Brown	Yellow	4
Gnd	Black	Black	5
Vcc	Red	Red	6

Custom lengths and insulation materials available. Contact sales@phoenixamerica.com.

Connector Options *(Single ended option depicted)*

Molex Mini-Fit Jr. (Male)

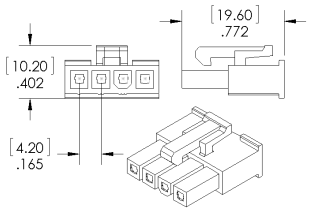

Molex Mini-Fit Jr. (Female)

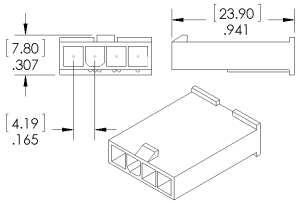

TE AmpModu MTE (Male)

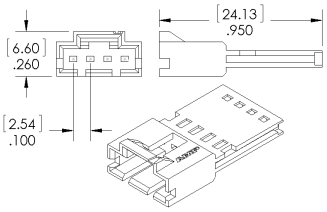

TE AmpModu MTE (Female)

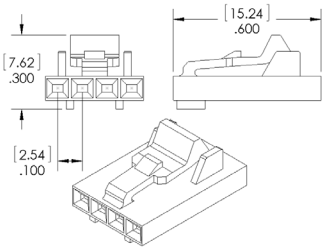

Need a different connector? Contact sales@phoenixamerica.com.

Part Number Description

H6-256-188-05-N-S-N-A-F-B-X

Series	PPR	Bore Size	Supply Voltage	Index	Output Type	Shaft Pass Through Hole	Target Magnet Mounting	Wiring	Length (Meters)	Connector
H6	**256** **512** **1024**	**079** 2 mm **118** 3 mm **125** 1/8 in **156** 5/32 in **157** 4 mm **188** 3/16 in *(default)* **197** 5 mm **236** 6 mm **250** 1/4 in **276** 7 mm **313** 5/16 in **315** 8 mm **375** 3/8 in **394** 10 mm **473** 12 mm **500** 1/2 in	**05** *5 V (default)* **24** *24 V*	**N** *A,B Quadrature (default)*	**S** *Single-Ended (default)* **D** *Differential*	**N** *None (default)* **Y** *Hole size will match Table 4.1*	**A** *Molded (default)* **B** *Aluminum Hub* **H** *Engineered Polymer Hub*	**F** *Flying Leads (default)* **C** *Cable*	**A** *.5 (19.685")* **B** 0.914 *(36") (default)* **C** 1 *(39.370")* **D** 2 *(78.740")*	**X** *None (default)* **A1** *TE AmpModu MTE (Male)* **A2** *TE AmpModu MTE (Female)* **M1** *Molex Mini-Fit Jr. (Male)* **M2** *Molex Mini-Fit Jr. (Female)*

Example: H6-256-188-05-N-S-N-A-F-B-X

Phoenix America, INC
4717 Clubview Drive
Fort Wayne, IN 46804

Tel: (888)-801-1422
Local: (260)-432-9664
Fax: (260)-432-9967

www.phoenixamerica.com
sales@phoenixamerica.com
© Copyright PAI 2017 Rev. 8/1/2017

Unikeyic Electronics

Global Electronic Components Distributor

Click to view pricing, inventory, delivery, and lifecycle information:

Phoenix America:

G08-H-0125-75-016 G16-A-0236-75-040 G32-A-1500-85-120 H9-0256-0000-05-A-N-U-F-B-X
H9-0500-0236-05-A-Y-A-F-A-X H9-1024-0000-05-A-Y-U-F-B-X G16-A-0236-85-050
H4-0160-0000-05-A-Y-U-F-B-X H6-0200-0079-05-A-N-A-F-A-X H6-0360-0197-05-A-Y-A-F-A-X
L6-0003-0000-05-N-S-N-U-F-B-X G32-A-1000-85-100 G58-B-2750-25-032 H2-0500-0079-05-A-N-H-F-A-X
G58-B-2250-25-032 H4-0640-0000-05-A-Y-U-F-B-X H6-0100-0125-05-A-Y-A-F-A-X G22-A-0625-75-064
H6-0500-0125-05-A-Y-A-F-A-X L2-0004-0000-05-N-S-N-U-F-B-X H2-0100-0197-05-A-N-H-F-A-X
H2-0256-0197-05-A-Y-H-F-A-X H6-0100-0156-05-A-N-A-F-A-X H9-0200-0236-05-A-Y-A-F-A-X
H9-0400-0315-05-A-N-A-F-A-X G58-H-1125-25-032 H2-0500-0125-05-A-Y-H-F-A-X
H9-0500-0375-05-A-Y-A-F-A-X L4-0005-0000-05-N-S-N-U-F-B-X L6-0020-0000-05-N-S-N-U-F-B-X