TS951, TS952, TS954

Input/output rail-to-rail low-power operational amplifiers

Datasheet - production data

TS951ILT

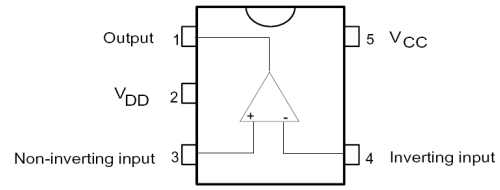

TS951ID

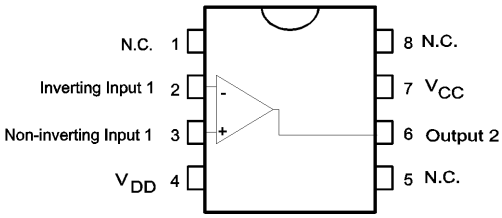

TS952ID-TS952IPT

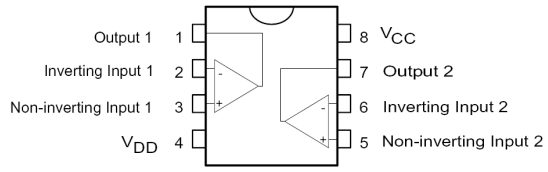

TS954ID-TS954IPT

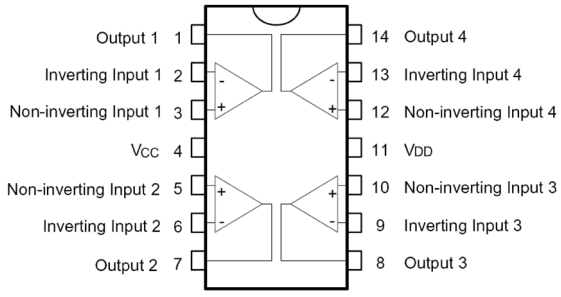

Features

- Rail-to-rail input common mode voltage range
- Rail-to-rail output voltage swing
- Operates from 2.7 V to 12 V
- High-speed (3 MHz, 1 V/µs)
- Low consumption (0.9 mA at 3 V)
- Supply voltage rejection ratio: 80 dB
- Latch-up immunity
- Available in SOT23-5 micropackage, SO8, TSSOP8, SO14, and TSSOP14 packages

Applications

- Set-top boxes
- Laptop/notebook computers
- Transformer/line drivers
- Personal entertainment (CD players)
- Portable communications (cell phones, pagers)
- Instrumentation and sensors
- Digital-to-analog converter buffers
- Portable headphone speaker drivers

Description

The TS951, TS952, and TS954 family of devices are rail-to-rail BiCMOS operational amplifiers optimized and fully specified for 3 V and 5 V operation.

The TS951 device is housed in the space-saving 5-pin SOT23 package that makes it well suited for battery powered systems. This micropackage simplifies the PC board design because of its ability to be placed in tight spaces (outside dimensions are: 2.8 mm x 2.9 mm).

This is information on a product in full production. www.st.com

Contents

1 Absolute maximum ratings and operating conditions 3

2 Electrical characteristics 5

3 Package information 9

3.1 SOT23-5 package information 10

3.2 SO8 package information 11

3.3 TSSOP8 package information 12

3.4 SO14 package information 13

3.5 TSSOP14 package information 14

4 Ordering information 15

5 Revision history 16

1 Absolute maximum ratings and operating conditions

Table 1. Absolute maximum ratings

Symbol	Parameter	Value	Unit
V_{CC}	Supply voltage(1)	14	V
V_{id}	Differential input voltage(2)	±1	
V_{in}	Input voltage(3)	V_{DD}-0.3 to V_{CC}+0.3	
T_{stg}	Storage temperature range	-65 to +150	°C
T_j	Maximum junction temperature	150	
R_{thja}	Thermal resistance junction-to-ambient(4) SOT23-5 SO8 TSSOP8 SO14 TSSOP14	 250 125 120 103 100	°C/W
R_{thjc}	Thermal resistance junction-to-case(4) SOT23-5 SO-8 TSSOP8 SO14 TSSOP14	 81 40 37 31 32	
ESD	HBM: human body model(5) TS951 TS952 TS954	 1 2 3	kV
	MM: machine model(6)	100	V
	CDM: charged device model(7) TS951 TS952 TS954	 1.5 1.5 1	kV
	Latch-up immunity	200	mA
	Lead temperature (soldering, 10 sec.)	260	°C

1. All voltage values, except differential voltage are with respect to network ground terminal.
2. Differential voltages are the non-inverting input terminal with respect to the inverting input terminal. If V_{id} > ±1 V, the maximum input current must not exceed ±1 mA. In this case (V_{id} > ±1 V), an input series resistor must be added to limit input current.
3. Do not exceed 14 V.
4. Short-circuits can cause excessive heating and destructive dissipation. R_{th} are typical values.
5. Human body model: a 100 pF capacitor is charged to the specified voltage, then discharged through a 1.5 kΩ resistor between two pins of the device. This is done for all couples of connected pin combinations while the other pins are floating.
6. Machine model: a 200 pF capacitor is charged to the specified voltage, then discharged directly between two pins of the device with no external series resistor (internal resistor < 5 Ω). This is done for all couples of connected pin combinations while the other pins are floating.
7. Charged device model: all pins and the package are charged together to the specified voltage and then discharged directly to ground through only one pin. This is done for all pins.

Table 2. Operating conditions

Symbol	Parameter	Value	Unit
V_{CC}	Supply voltage	2.7 to 12	V
V_{icm}	Common mode input voltage range	V_{DD} -0.2 to V_{CC} +0.2	
T_{oper}	Operating free air temperature range	-40 to +125	°C

2 Electrical characteristics

Table 3. Electrical characteristics at V_{CC} = +3 V, V_{DD} = 0 V , R_L connected to $V_{CC}/2$, T_{amb} = 25 °C (unless otherwise specified)

Symbol	Parameter	Min.	Typ.	Max.	Unit
V_{io}	Input offset voltage $T_{min} \le T_{amb} \le T_{max}$			6 8	mV
DV_{io}	Input offset voltage drift		2		µV/°C
I_{io}	Input offset current $T_{min} \le T_{amb} \le T_{max}$		1	30 80	nA
I_{ib}	Input bias current $V_{icm} = V_{CC}/2$ $T_{min} \le T_{amb} \le T_{max}$		35	100 200	nA
CMR	Common mode rejection ratio	50	80		dB
SVR	Supply voltage rejection ratio V_{CC} = 2.7 V to 3.3 V	60	80		
A_{vd}	Large signal voltage gain V_o = 2 V_{pk-pk}, R_L = 600 Ω		80		
V_{OH}	High level output voltage R_L = 600 Ω	2.8	2.9		V
V_{OL}	Low level output voltage R_L = 600 Ω		80	250	mV
I_{sc}	Output short-circuit current	10			mA
I_{CC}	Supply current (per amplifier) No load, $V_{icm} = V_{CC}/2$		0.9	1.3	
GBP	Gain bandwidth product R_L = 2 k Ω		3		MHz
SR	Slew rate		1		V/µs
∅m	Phase margin at unit gain R_L = 600 Ω, C_L =100 pF		60		Degrees
Gm	Gain margin R_L = 600 Ω, C_L =100 pF		10		dB
e_n	Equivalent input noise voltage f = 1 kHz		25		$\frac{nV}{\sqrt{Hz}}$
THD	Total harmonic distortion V_{out} = 4 V_{pk-pk}, F = 10 kHz, A_V = 2, R_L =10 kΩ		0.01		%

Table 4. Electrical characteristics at V_{CC} = +5 V, V_{DD} = 0 V, R_L connected to V_{CC}/2, T_{amb} = 25 °C (unless otherwise specified)

Symbol	Parameter	Min.	Typ.	Max.	Unit
V_{io}	Input offset voltage $T_{min} \le T_{amb} \le T_{max}$			6 8	mV
DV_{io}	Input offset voltage drift		2		µV/°C
I_{io}	Input offset current V_{icm} = V_{CC}/2 $T_{min} \le T_{amb} \le T_{max}$		1	30 80	nA
I_{ib}	Input bias current V_{icm} = V_{CC}/2 $T_{min} \le T_{amb} \le T_{max}$		35	100 200	
CMR	Common mode rejection ratio	50	80		dB
SVR	Supply voltage rejection ratio V_{CC} = 2.7 V to 3.3 V	60	80		
A_{vd}	Large signal voltage gain V_o = 2 V_{pk-pk}, R_L = 600 Ω		86		
V_{OH}	High level output voltage R_L = 600 Ω	4.7	4.8		V
V_{OL}	Low level output voltage R_L = 600 Ω		80	300	mV
I_{sc}	Output short-circuit current	10			mA
I_{CC}	Supply current (per amplifier) No load, V_{icm} = V_{CC}/2		0.95	1.4	
GBP	Gain bandwidth product R_L = 2 kΩ		3		MHz
SR	Slew rate		1		V/µs
∅m	Phase margin at unit gain R_L = 600 Ω, C_L =100 pF		60		Degrees
Gm	Gain margin R_L = 600 Ω, C_L =100 pF		10		dB
e_n	Equivalent input noise voltage f = 1 kHz		25		$\frac{nV}{\sqrt{Hz}}$
THD	Total harmonic distortion V_{out} = 4 V_{pk-pk}, F = 10 kHz, A_V = 2, R_L =10 kΩ		0.01		%

Figure 1. Supply current vs. supply voltage

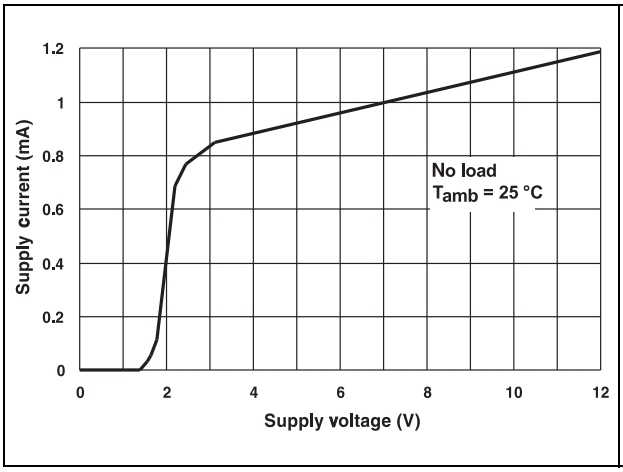

Figure 2. Output short-circuit current vs. output voltage

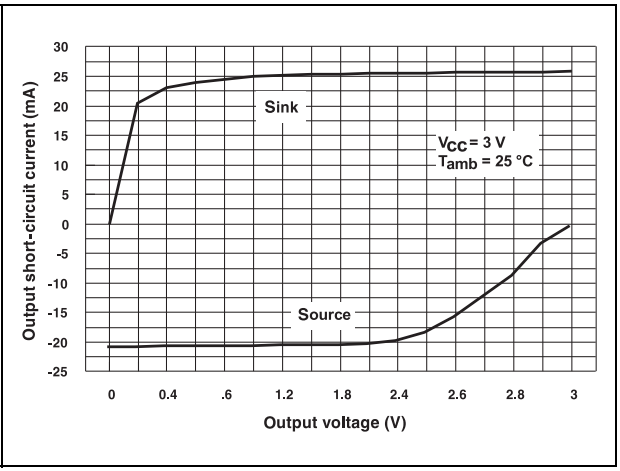

Figure 3. Voltage gain and phase vs. frequency

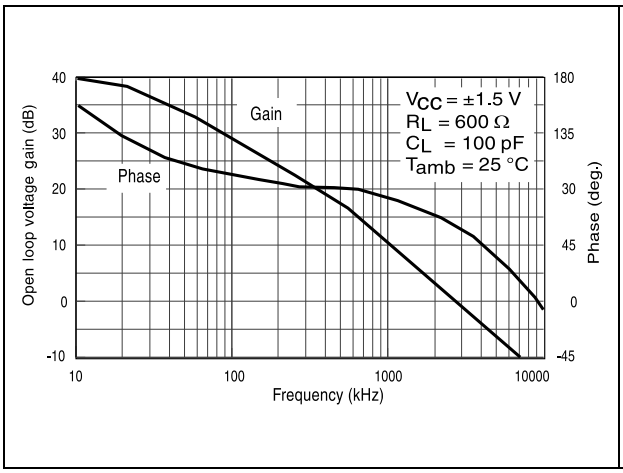

Figure 4. Supply current vs. temperature

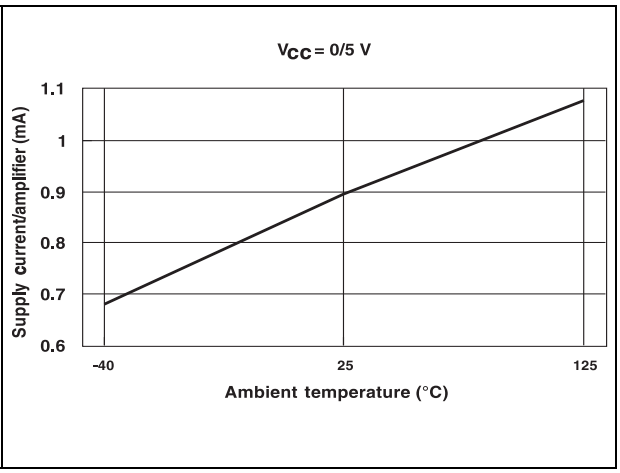

Figure 5. Output short-circuit current vs. temperature

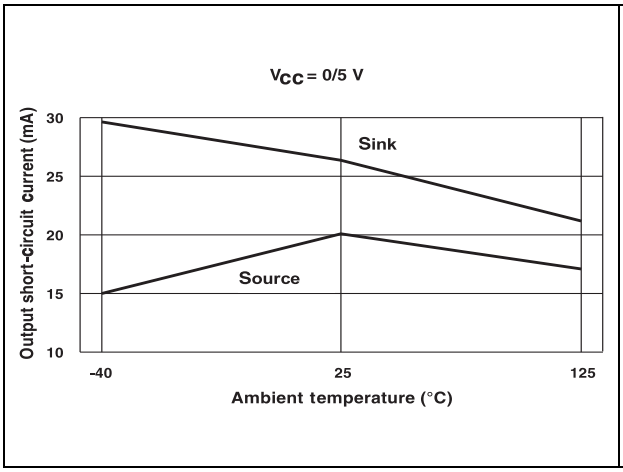

Figure 6. Slew rate vs. temperature

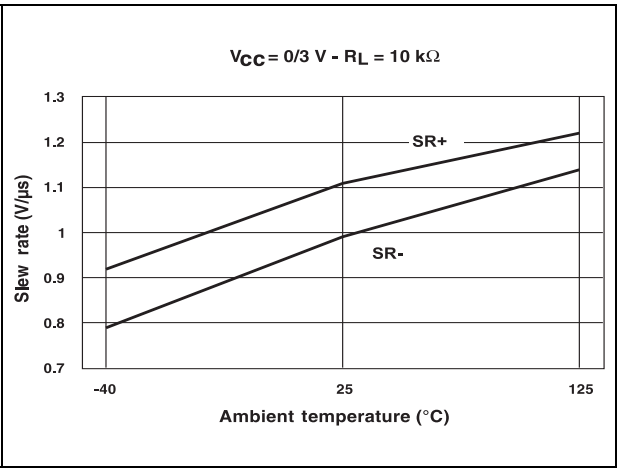

Figure 7. THD + noise vs. V_{out} (V_{CC} = ± 1.5 V, R_L = 600 Ω, f = 1 kHz, G = -1)

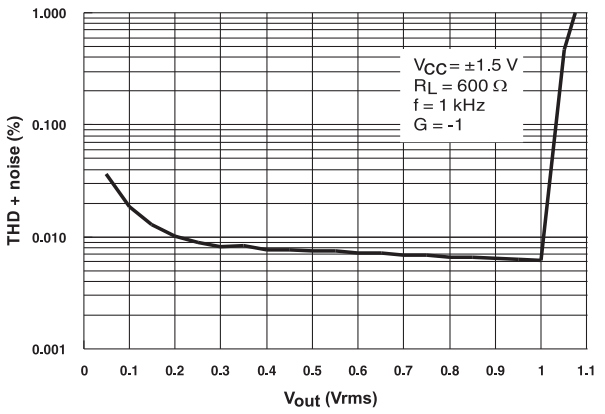

Figure 8. THD + noise vs. frequency

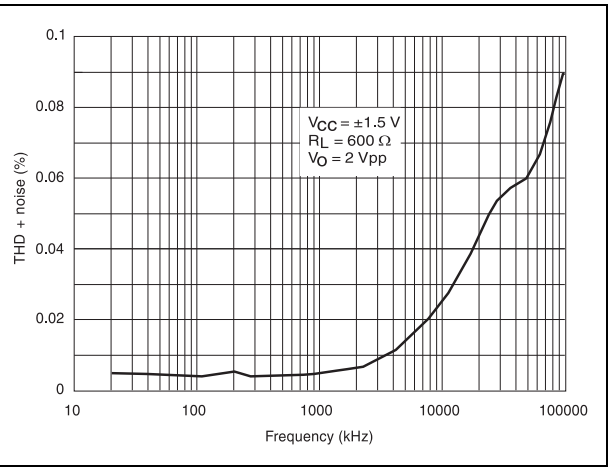

Figure 9. THD + noise vs. V_{out} (V_{CC} = ± 1.5 V, R_L = 2 kΩ, f = 1 kHz, G = -1)

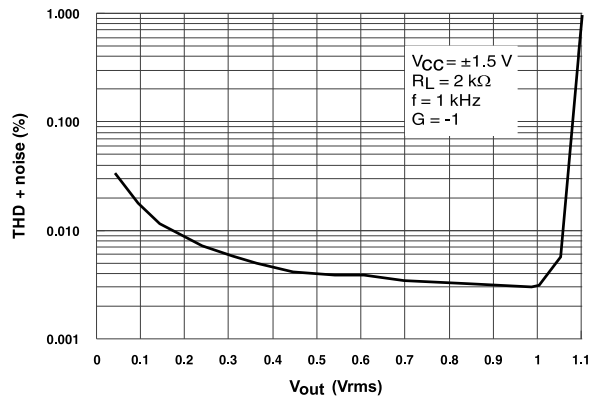

Figure 10. Equivalent input noise voltage vs. frequency

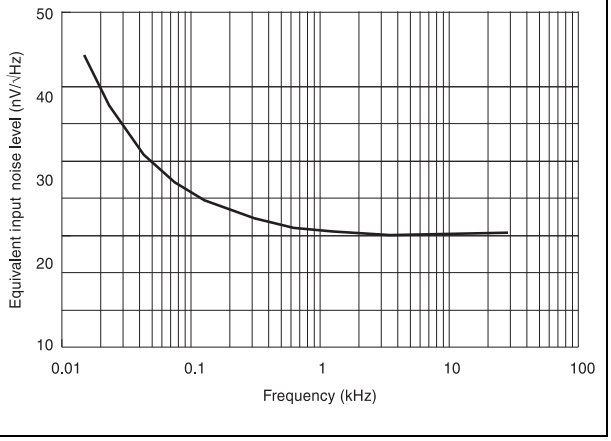

3 Package information

In order to meet environmental requirements, ST offers these devices in different grades of ECOPACK® packages, depending on their level of environmental compliance. ECOPACK® specifications, grade definitions and product status are available at: *www.st.com*. ECOPACK® is an ST trademark.

3.1 SOT23-5 package information

Figure 11. SOT23-5 package outline

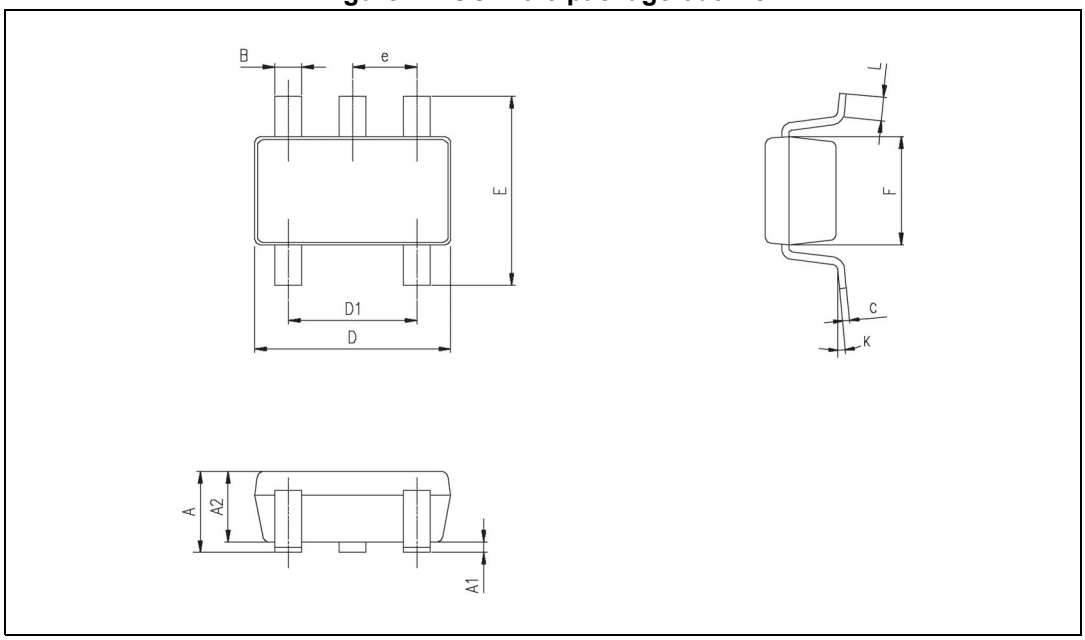

Table 5. SOT23-5 package mechanical data

Symbol	Dimensions					
	Millimeters			Inches		
	Min.	Typ.	Max.	Min.	Typ.	Max.
A	0.90	1.20	1.45	0.035	0.047	0.057
A1			0.15			0.006
A2	0.90	1.05	1.30	0.035	0.041	0.051
B	0.35	0.40	0.50	0.013	0.015	0.019
C	0.09	0.15	0.20	0.003	0.006	0.008
D	2.80	2.90	3.00	0.110	0.114	0.118
D1		1.90			0.075	
e		0.95			0.037	
E	2.60	2.80	3.00	0.102	0.110	0.118
F	1.50	1.60	1.75	0.059	0.063	0.069
L	0.10	0.35	0.60	0.004	0.013	0.023
K	0 degrees		10 degrees			

3.2 SO8 package information

Figure 12. SO8 package outline

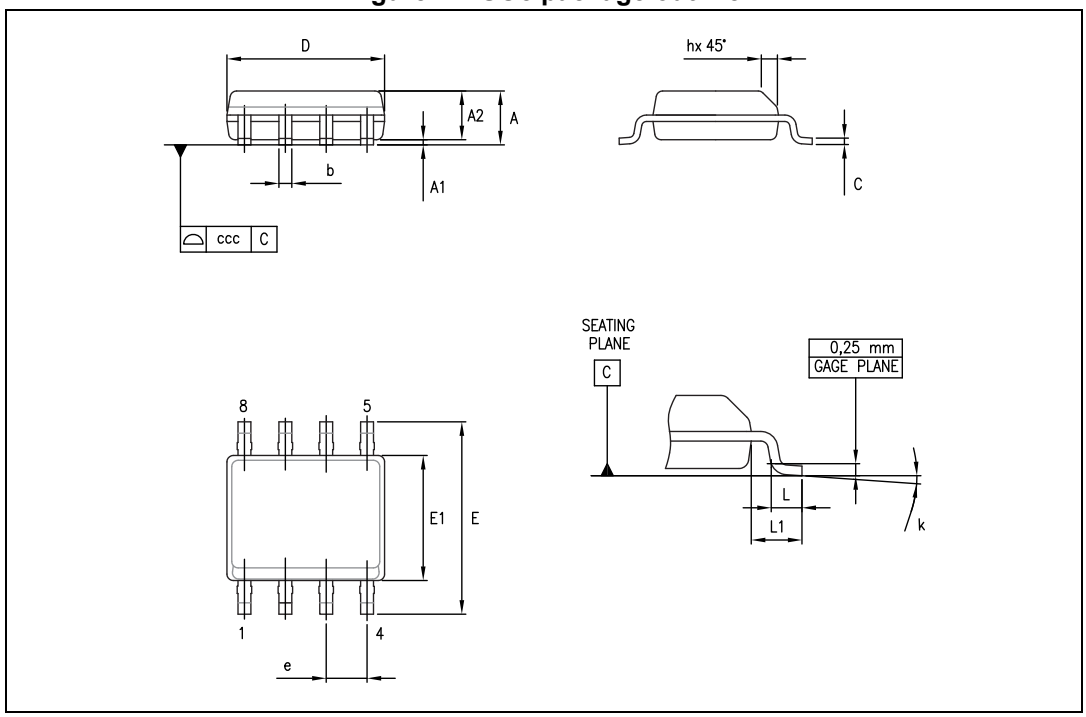

Table 6. SO8 package mechanical data

Symbol	Dimensions					
	Millimeters			Inches		
	Min.	Typ.	Max.	Min.	Typ.	Max.
A			1.75			0.069
A1	0.10		0.25	0.004		0.010
A2	1.25			0.049		
b	0.28		0.48	0.011		0.019
c	0.17		0.23	0.007		0.010
D	4.80	4.90	5.00	0.189	0.193	0.197
E	5.80	6.00	6.20	0.228	0.236	0.244
E1	3.80	3.90	4.00	0.150	0.154	0.157
e		1.27			0.050	
h	0.25		0.50	0.010		0.020
L	0.40		1.27	0.016		0.050
L1		1.04			0.040	
k	1°		8°	1°		8°
ccc			0.10			0.004

3.3 TSSOP8 package information

Figure 13. TSSOP8 package outline

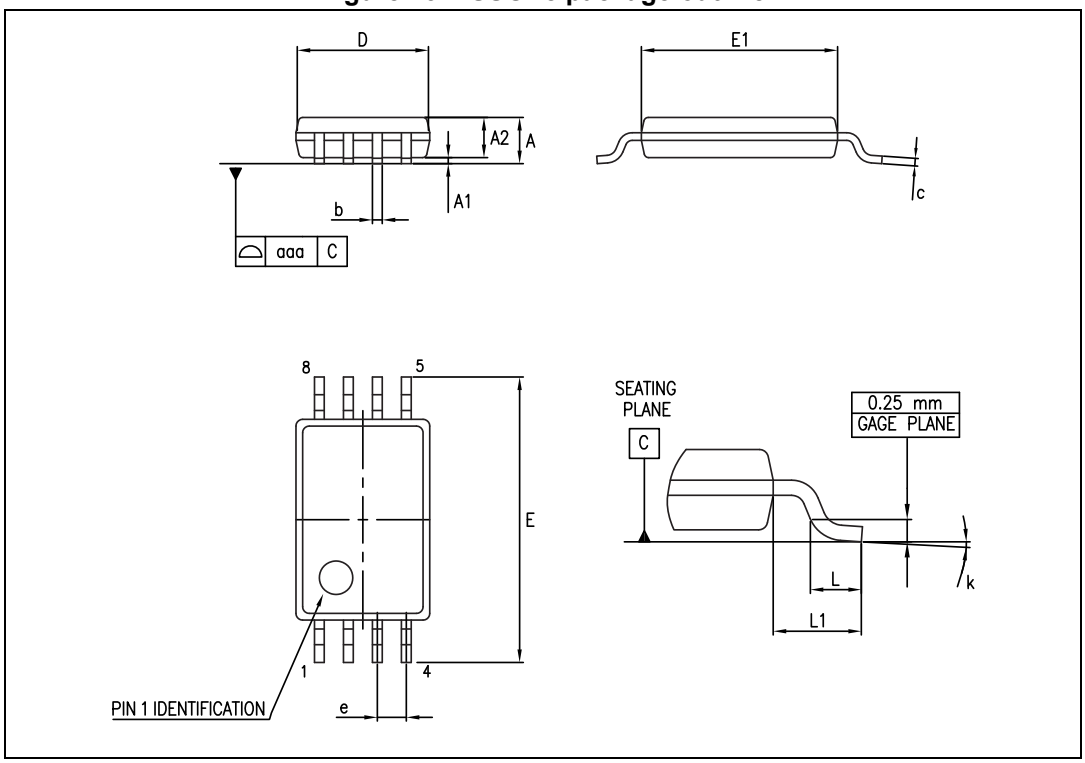

Table 7. TSSOP8 package mechanical data

Symbol	Dimensions					
	Millimeters			Inches		
	Min.	Typ.	Max.	Min.	Typ.	Max.
A			1.20			0.047
A1	0.05		0.15	0.002		0.006
A2	0.80	1.00	1.05	0.031	0.039	0.041
b	0.19		0.30	0.007		0.012
c	0.09		0.20	0.004		0.008
D	2.90	3.00	3.10	0.114	0.118	0.122
E	6.20	6.40	6.60	0.244	0.252	0.260
E1	4.30	4.40	4.50	0.169	0.173	0.177
e		0.65			0.0256	
k	0°		8°	0°		8°
L	0.45	0.60	0.75	0.018	0.024	0.030
L1		1			0.039	
aaa			0.10			0.004

3.4 SO14 package information

Figure 14. SO14 package outline

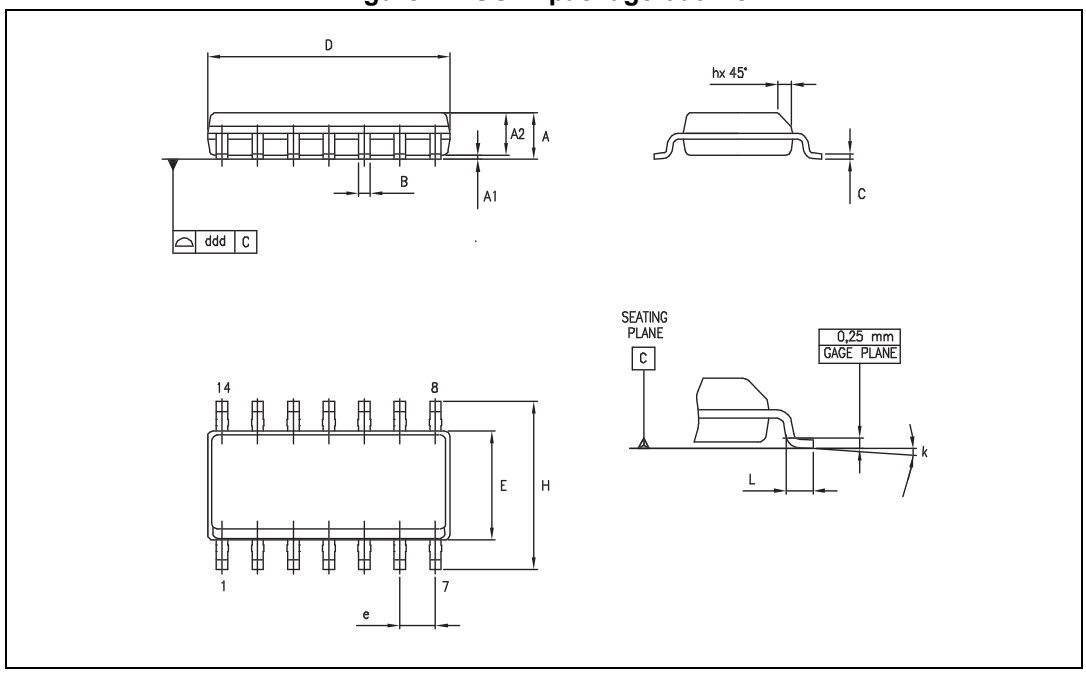

Table 8. SO14 package mechanical data

Symbol	Dimensions					
	Millimeters			Inches		
	Min.	Typ.	Max.	Min.	Typ.	Max.
A	1.35		1.75	0.05		0.068
A1	0.10		0.25	0.004		0.009
A2	1.10		1.65	0.04		0.06
B	0.33		0.51	0.01		0.02
C	0.19		0.25	0.007		0.009
D	8.55		8.75	0.33		0.34
E	3.80		4.0	0.15		0.15
e		1.27			0.05	
H	5.80		6.20	0.22		0.24
h	0.25		0.50	0.009		0.02
L	0.40		1.27	0.015		0.05
k	8° (max.)					
ddd			0.10			0.004

3.5 TSSOP14 package information

Figure 15. TSSOP14 package outline

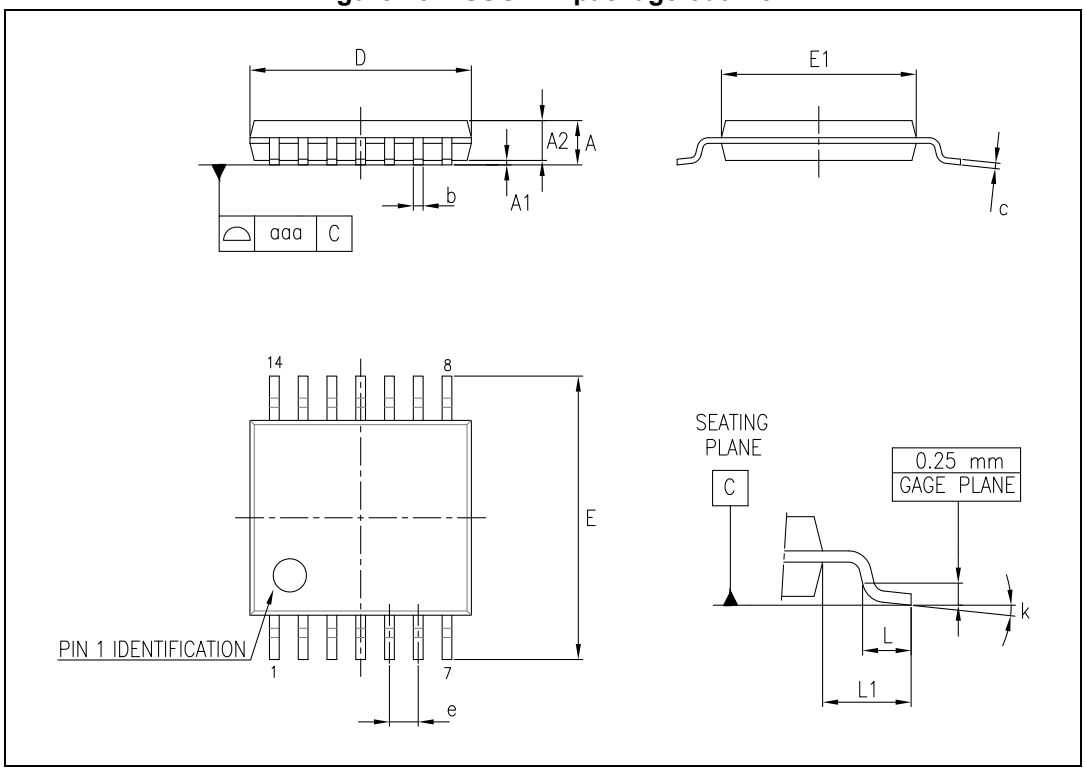

Table 9. TSSOP14 package mechanical data

Symbol	Dimensions					
	Millimeters			Inches		
	Min.	Typ.	Max.	Min.	Typ.	Max.
A			1.20			0.047
A1	0.05		0.15	0.002	0.004	0.006
A2	0.80	1.00	1.05	0.031	0.039	0.041
b	0.19		0.30	0.007		0.012
c	0.09		0.20	0.004		0.0089
D	4.90	5.00	5.10	0.193	0.197	0.201
E	6.20	6.40	6.60	0.244	0.252	0.260
E1	4.30	4.40	4.50	0.169	0.173	0.176
e		0.65			0.0256	
L	0.45	0.60	0.75	0.018	0.024	0.030
L1		1.00			0.039	
k	0°		8°	0°		8°
aaa			0.10			0.004

4 Ordering information

Table 10. Order codes

Order code	Temperature range	Package	Packaging	Marking
TS951ID TS951IDT	-40 °C to +125 °C	SO8	Tube or tape and reel	951I
TS951ILT		SOT23-5L	Tape and reel	K101
TS951IYLT(1)		SOT23-5L (automotive grade)		K102
TS952ID TS952IDT		SO8	Tube or tape and reel	952I
TS952IYDT(1)		SO8 (automotive grade)		952IY
TS952IPT		TSSOP8	Tape and reel	952I
TS952IYPT(1)		TSSOP8 (automotive grade)		952Y
TS954ID TS954IDT		SO14	Tube or tape and reel	954I
TS954IYDT(1)		SO14 (automotive grade)		954IY
TS954IPT		TSSOP14	Tape and reel	954I
TS954IYPT(1)		TSSOP14 (automotive grade)		954Y

1. Qualified and characterized according to AEC Q100 and Q003 or equivalent, advanced screening according to AEC Q001 and Q 002 or equivalent.

5 Revision history

Table 11. Document revision history

Date	Revision	Changes
01-May-2001	1	Initial release.
02-Jan-2005	2	Modifications on AMR *Table 1 on page 3* (explanation of V_{id} and V_i limits, ESD MM and CDM values added, R_{thja} added).
03-Jul-2005	3	PPAP references inserted in the datasheet see *Table 10: Order codes*.
04-Aug-2005	4	Table data was badly formatted, see *Table 4 on page 6*.
15-Dec-2005	5	TS951IYLT PPAP reference added, see *Table 10: Order codes*.
10-Dec-2007	6	Added missing order codes, and automotive grade status in *Table 10: Order codes*. Updated footnotes for ESD parameters in *Table 1: Absolute maximum ratings*. Reformatted package information.
10-Mar-2009	7	Removed TS951IN and TS951IYD/DT from *Table 10: Order codes*.
24-Feb-2011	8	Changed TS951IYLT marking and updated automotive grade status in *Table 10: Order codes*.
21-Nov-2012	9	Updated *Features* (added DIP8, SO-8, TSSOP8, DIP14, SO-14, and TSSOP14 package). Updated *Table 1* (added values of DIP8 and DIP14 packages for R_{thja} and R_{thjc} symbols). Updated title of *Figure 7* and *Figure 9* (added conditions). Updated *Table 10* (removed TS952IYD and TS954IYD order code, qualified status of TS954IYPT and TS952IYPT order code). Minor corrections throughout document.
11-Sep-2013	10	Removed DIP8 and DIP14 packages and all information pertaining to them. *Table 10: Order codes*; updated marking of order code TS951IYLT from K1A2 to K102.

Please Read Carefully:

Information in this document is provided solely in connection with ST products. STMicroelectronics NV and its subsidiaries (“ST”) reserve the right to make changes, corrections, modifications or improvements, to this document, and the products and services described herein at any time, without notice.

All ST products are sold pursuant to ST’s terms and conditions of sale.

Purchasers are solely responsible for the choice, selection and use of the ST products and services described herein, and ST assumes no liability whatsoever relating to the choice, selection or use of the ST products and services described herein.

No license, express or implied, by estoppel or otherwise, to any intellectual property rights is granted under this document. If any part of this document refers to any third party products or services it shall not be deemed a license grant by ST for the use of such third party products or services, or any intellectual property contained therein or considered as a warranty covering the use in any manner whatsoever of such third party products or services or any intellectual property contained therein.

UNLESS OTHERWISE SET FORTH IN ST’S TERMS AND CONDITIONS OF SALE ST DISCLAIMS ANY EXPRESS OR IMPLIED WARRANTY WITH RESPECT TO THE USE AND/OR SALE OF ST PRODUCTS INCLUDING WITHOUT LIMITATION IMPLIED WARRANTIES OF MERCHANTABILITY, FITNESS FOR A PARTICULAR PURPOSE (AND THEIR EQUIVALENTS UNDER THE LAWS OF ANY JURISDICTION), OR INFRINGEMENT OF ANY PATENT, COPYRIGHT OR OTHER INTELLECTUAL PROPERTY RIGHT.

ST PRODUCTS ARE NOT AUTHORIZED FOR USE IN WEAPONS. NOR ARE ST PRODUCTS DESIGNED OR AUTHORIZED FOR USE IN: (A) SAFETY CRITICAL APPLICATIONS SUCH AS LIFE SUPPORTING, ACTIVE IMPLANTED DEVICES OR SYSTEMS WITH PRODUCT FUNCTIONAL SAFETY REQUIREMENTS; (B) AERONAUTIC APPLICATIONS; (C) AUTOMOTIVE APPLICATIONS OR ENVIRONMENTS, AND/OR (D) AEROSPACE APPLICATIONS OR ENVIRONMENTS. WHERE ST PRODUCTS ARE NOT DESIGNED FOR SUCH USE, THE PURCHASER SHALL USE PRODUCTS AT PURCHASER’S SOLE RISK, EVEN IF ST HAS BEEN INFORMED IN WRITING OF SUCH USAGE, UNLESS A PRODUCT IS EXPRESSLY DESIGNATED BY ST AS BEING INTENDED FOR “AUTOMOTIVE, AUTOMOTIVE SAFETY OR MEDICAL” INDUSTRY DOMAINS ACCORDING TO ST PRODUCT DESIGN SPECIFICATIONS. PRODUCTS FORMALLY ESCC, QML OR JAN QUALIFIED ARE DEEMED SUITABLE FOR USE IN AEROSPACE BY THE CORRESPONDING GOVERNMENTAL AGENCY.

Resale of ST products with provisions different from the statements and/or technical features set forth in this document shall immediately void any warranty granted by ST for the ST product or service described herein and shall not create or extend in any manner whatsoever, any liability of ST.

ST and the ST logo are trademarks or registered trademarks of ST in various countries.
Information in this document supersedes and replaces all information previously supplied.
The ST logo is a registered trademark of STMicroelectronics. All other names are the property of their respective owners.

© 2013 STMicroelectronics - All rights reserved

STMicroelectronics group of companies

Australia - Belgium - Brazil - Canada - China - Czech Republic - Finland - France - Germany - Hong Kong - India - Israel - Italy - Japan - Malaysia - Malta - Morocco - Philippines - Singapore - Spain - Sweden - Switzerland - United Kingdom - United States of America

www.st.com

Unikeyic Electronics

Global Electronic Components Distributor

Click to view pricing, inventory, delivery, and lifecycle information:

STMicroelectronics:

TSL6204IYPT STBC02AJR STM6717SJWY6F L5991D013TR L6389ED VIPER011LS L9904TR SM4T15CAY STB36NM60ND SCT015W120G3-4AG SMC50J36CA STM32F103C6T7ATR STM6719SHWB6F STISO621 SM30T18AY E-L6219DSA L6228PD LCP02-150B1RL LD39050PU33R ST25DV16KC-IE6C3 LD1117DTC-R TSV611AILT M95160-DRDW8TP/K STM32F103RBH6 STM32L496RGT6 TSV324AIYPT L6399DTR L78L12ABD-TR STM32F103VGT6 STM6717TWWY6F