STGIF5CH60S-X

Datasheet

SLLIMM - 2nd series IPM, 3-phase inverter, 8 A, 600 V, short-circuit rugged IGBT

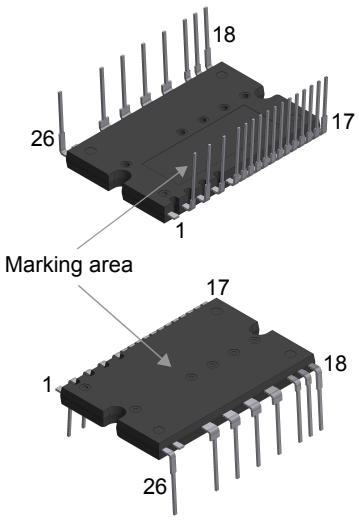

SDIP2F-26L type X2

Features

- IPM 8 A, 600 V 3-phase IGBT inverter bridge including 2 control ICs for gate driving and freewheeling diodes
- 3.3 V, 5 V TTL/CMOS inputs with hysteresis
- Internal bootstrap diode
- Undervoltage lockout of gate drivers
- Smart shutdown function
- Short-circuit protection
- Shutdown input/fault output
- Separate open emitter outputs
- Built-in temperature sensor
- Comparator for fault protection
- Short-circuit rugged TFS IGBT
- Very fast, soft recovery diodes
- Fully isolated package
- Isolation ratings of 1600 Vrms/min.
- UL recognition: UL 1557, file E81734

Applications

- Industrial motor control
- Washing machines
- Dryer
- Fans
- Pumps and compressors

Description

This second series of SLLIMM (small low-loss intelligent molded module) provides a compact, high-performance AC motor drive in a simple, rugged design. It combines new ST proprietary control ICs (one LS and one HS driver) with an improved short-circuit rugged trench gate field-stop (TFS) IGBT, making it ideal for motor drives operating up to 20 kHz in hard-switching circuitries.

Product status link
STGIF5CH60S-X

Product summary	
Order code	STGIF5CH60S-X
Marking	GIF5CH60S-X
Package	SDIP2F-26L type X2
Packing	Tube

1 Internal schematic diagram and pin configuration

Figure 1. **Internal schematic diagram and pin configuration**

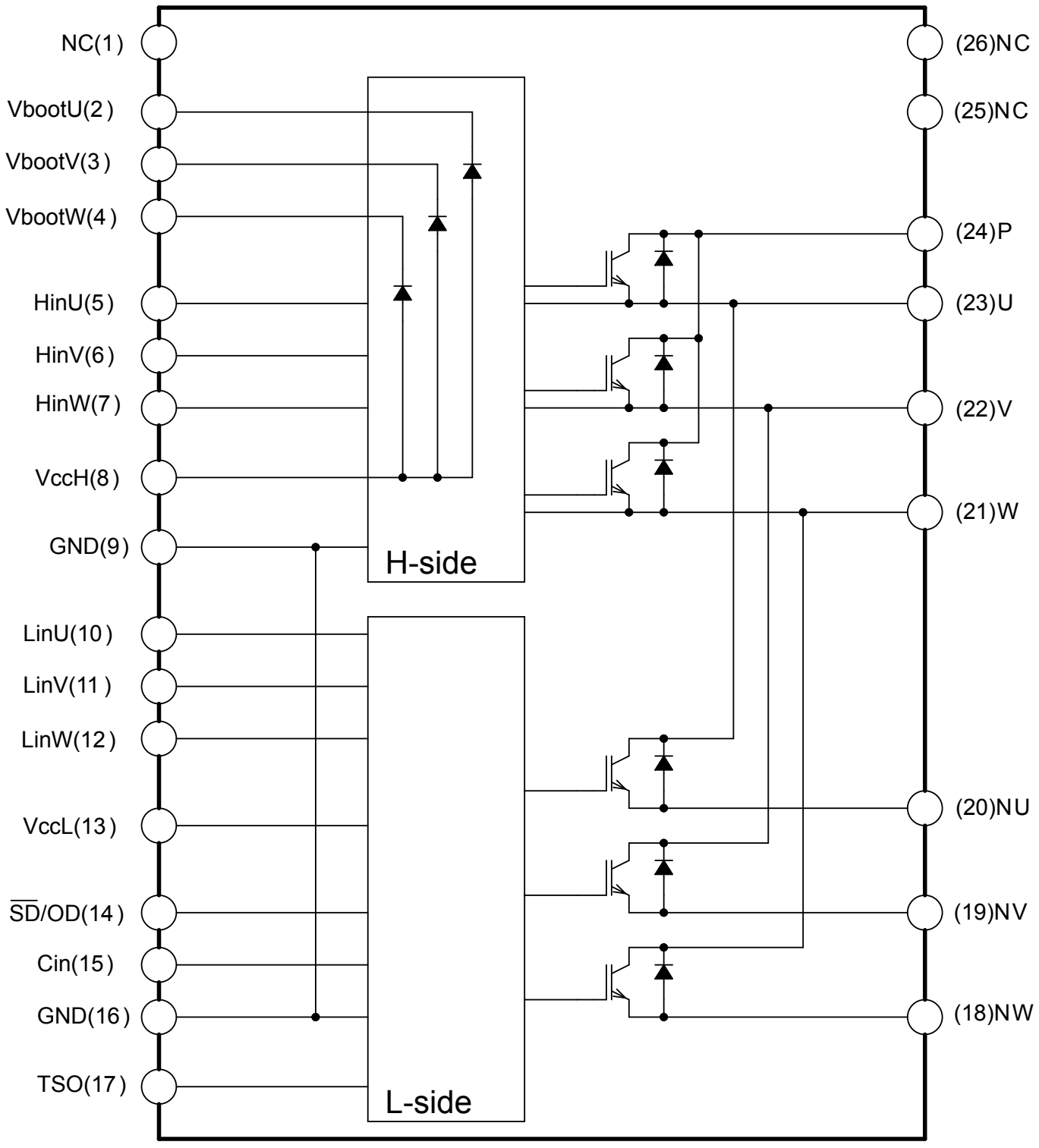

AMG171020161037SA

Table 1. Pin description

Pin	Symbol	Description
1	NC	-
2	VBOOTu	Bootstrap voltage for U phase
3	VBOOTv	Bootstrap voltage for V phase
4	VBOOTw	Bootstrap voltage for W phase
5	HINu	High-side logic input for U phase
6	HINv	High-side logic input for V phase
7	HINw	High-side logic input for W phase
8	VCCH	High-side low voltage power supply
9	GND	Ground
10	LINu	Low-side logic input for U phase
11	LINv	Low-side logic input for V phase
12	LINw	Low-side logic input for W phase
13	VCCL	Low-side low voltage power supply
14	$\overline{SD}$/OD	Shutdown logic input (active low)/open-drain (comparator output)
15	CIN	Comparator input
16	GND	Ground
17	TSO	Temperature sensor output
18	NW	Negative DC input for W phase
19	NV	Negative DC input for V phase
20	NU	Negative DC input for U phase
21	W	W phase output
22	V	V phase output
23	U	U phase output
24	P	Positive DC input
25	NC	-
26	NC	-

2 Absolute maximum ratings

T_J = 25 °C unless otherwise noted.

Table 2. Inverter parts

Symbol	Parameter	Value	Unit
V_{PN}	Supply voltage applied between P -N_U, -N_V, -N_W	450	V
$V_{PN(surge)}$	Supply voltage (surge) applied between P -N_U, -N_V, -N_W	500	V
V_{CES}	Collector-emitter voltage each IGBT	600	V
$\pm I_C$	Continuous collector current each IGBT (T_C = 25 °C)	8	A
	Continuous collector current each IGBT (T_C = 80 °C)	5	
$\pm I_{CP}$	Peak collector current each IGBT (less than 1 ms)	16	A
P_{TOT}	Total power dissipation at T_C = 25 °C each IGBT	30	W
t_{SCW}	Short-circuit withstand time, V_{CE} = 300 V, T_J = 125 °C, V_{CC} = V_{boot} = 15 V, V_{IN} = 0 to 5 V	5	µs

Table 3. Control parts

Symbol	Parameter	Min.	Max.	Unit
V_{CC}	Supply voltage applied between V_{CCH}-GND, V_{CCL}-GND	- 0.3	20	V
V_{BOOT}	Bootstrap voltage	- 0.3	619	V
V_{OUT}	Output voltage applied between U, V, W and GND	V_{BOOT} - 21	V_{BOOT} + 0.3	V
V_{CIN}	Comparator input voltage	- 0.3	20	V
V_{IN}	Logic input voltage applied between HINx, LINx and GND	- 0.3	15	V
$V_{\overline{SD}/OD}$	Open drain voltage	-0.3	7	V
$I_{\overline{SD}/OD}$	Open drain sink current		10	mA
V_{TSO}	Temperature sensor output voltage	-0.3	5.5	V
I_{TSO}	Temperature sensor output current		7	mA

Table 4. Total system

Symbol	Parameter	Value	Unit
V_{ISO}	Isolation withstand voltage applied between each pin and heat sink plate (AC voltage, t = 60 s)	1600	Vrms
T_J	Power chip operating junction temperature range	-40 to 175	°C
T_C	Operating case temperature range	-40 to 125	°C

2.1 Thermal data

Table 5. **Thermal data**

Symbol	Parameter	Value	Unit
R_{thJC}	Thermal resistance, junction-to-case single IGBT	5	°C/W
	Thermal resistance, junction-to-case single diode	9	

3 Electrical characteristics

T_J = 25 °C unless otherwise specified.

3.1 Inverter parts

Table 6. Static

Symbol	Parameter	Test conditions	Min.	Typ.	Max.	Unit
I_{CES}	Collector cut-off current	V_{CE} = 600 V, V_{CC} = V_{boot} = 15 V	-		100	µA
$V_{CE(sat)}$	Collector-emitter saturation voltage	V_{CC} = V_{boot} = 15 V, V_{IN}(1) = 0 to 5 V, I_C = 5 A	-	1.5	1.95	V
		V_{CC} = V_{boot} = 15 V, V_{IN}(1) = 0 to 5 V, I_C = 8 A	-	1.7		
V_F	Diode forward voltage	V_{IN}(1) = 0 V, I_C = 5 A	-	2.1	2.7	V
		V_{IN}(1) = 0 V, I_C = 8 A	-	2.4		V

1. *Applied between HINx, LINx and GND for x = U, V, W.*

Table 7. Inductive load switching time and energy

Symbol	Parameter	Test conditions	Min.	Typ.	Max.	Unit
t_{on}(1)	Turn-on time	V_{DD} = 300 V, V_{CC} = V_{boot} = 15 V, V_{IN}(2) = 0 to 5 V, I_C = 5 A	-	265	-	ns
$t_{c(on)}$(1)	Crossover time on		-	110	-	
t_{off}(1)	Turn-off time		-	305	-	
$t_{c(off)}$(1)	Crossover time off		-	92	-	
t_{rr}	Reverse recovery time		-	100	-	
E_{on}	Turn-on switching energy		-	90	-	µJ
E_{off}	Turn-off switching energy		-	60	-	
E_{rr}	Reverse recovery energy		-	5.6	-	
t_{on}(1)	Turn-on time	V_{DD} = 300 V, V_{CC} = V_{boot} = 15 V, V_{IN}(2) = 0 to 5 V, I_C = 8 A	-	282	-	ns
$t_{c(on)}$(1)	Crossover time on		-	126	-	
t_{off}(1)	Turn-off time		-	295	-	
$t_{c(off)}$(1)	Crossover time off		-	90	-	
t_{rr}	Reverse recovery time		-	100	-	
E_{on}	Turn-on switching energy		-	163	-	µJ
E_{off}	Turn-off switching energy		-	86	-	
E_{rr}	Reverse recovery energy		-	9.2	-	

1. *t_{on} and t_{off} include the propagation delay time of the internal drive. $t_{c(on)}$ and $t_{c(off)}$ are the switching times of the IGBT itself under the internally given gate driving conditions.*
2. *Applied between HINx, LINx and GND for x = U, V, W.*

Figure 2. **Switching time test circuit**

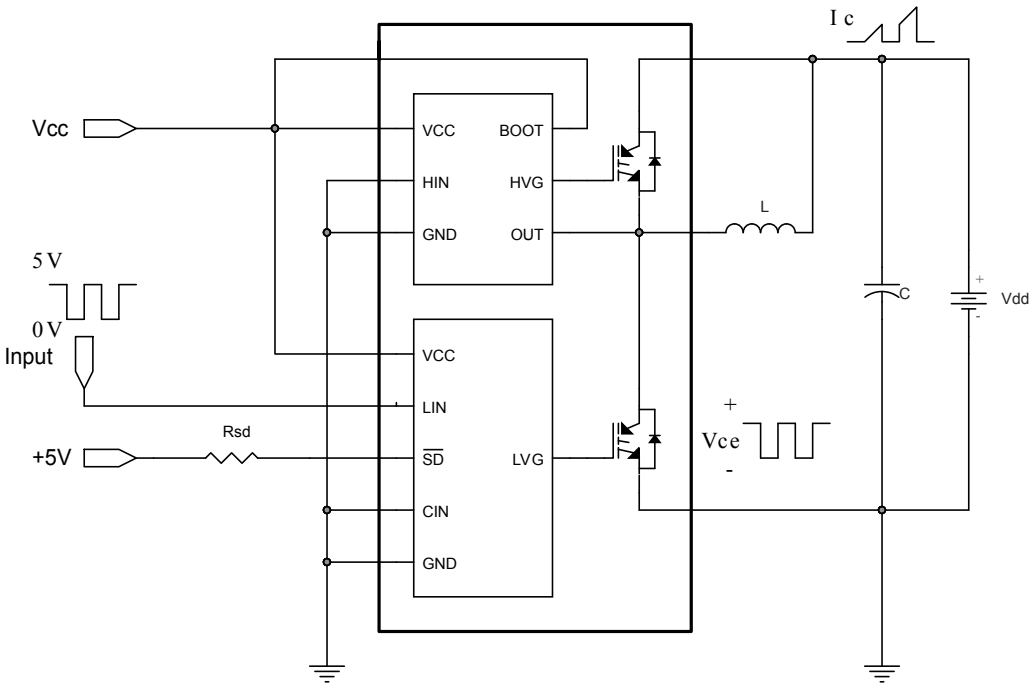

Figure 3. **Switching time definition**

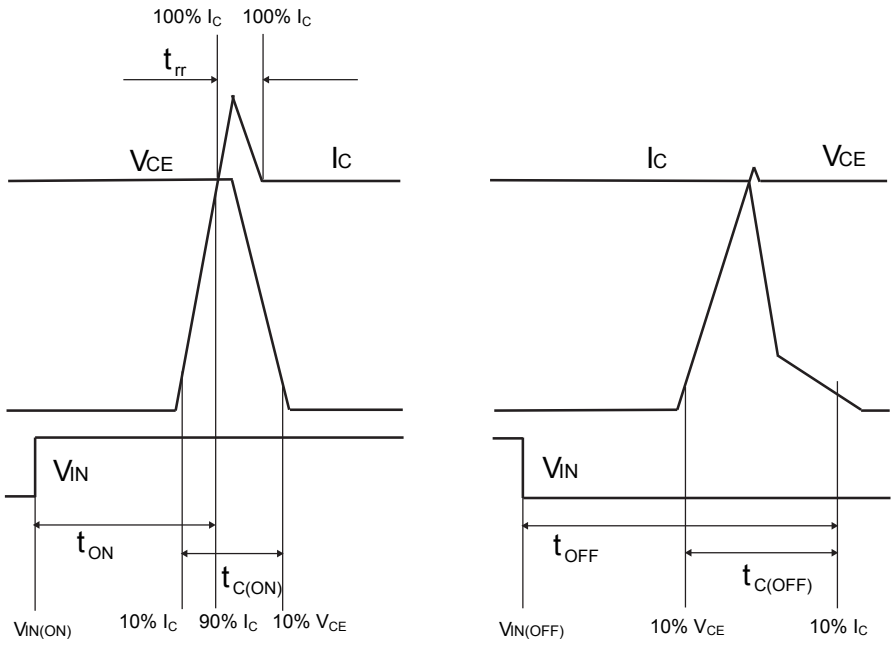

(a) turn-on

(b) turn-off

AM09223V1

3.2 Control/protection parts

Table 8. High- and low-side drivers

Symbol	Parameter	Test condition	Min.	Typ.	Max.	Unit
V_{il}	Low logic level voltage				0.8	V
V_{ih}	High logic level voltage		2			V
I_{INh}	IN logic “1” input bias current	IN_x = 15 V	80	150	200	µA
I_{INl}	IN logic “0” input bias current	IN_x = 0 V			1	µA
High-side						
V_{CC_hys}	V_{CC} UV hysteresis		1.2	1.4	1.7	V
$V_{CCH_th(on)}$	V_{CCH} UV turn-on threshold		11	11.5	12	V
$V_{CCH_th(off)}$	V_{CCH} UV turn-off threshold		9.6	10.1	10.6	V
V_{BS_hys}	V_{BS} UV hysteresis		0.5	1	1.6	V
$V_{BS_th(on)}$	V_{BS} UV turn-on threshold		10.1	11	11.9	V
$V_{BS_th(off)}$	V_{BS} UV turn-off threshold		9.1	10	10.9	V
I_{QBSU}	Under voltage V_{BS} quiescent current	V_{BS} = 9 V, HINx(1) = 5 V		55	75	µA
I_{QBS}	V_{BS} quiescent current	V_{CC} = 15 V, HINx(1) = 5 V		125	170	µA
I_{qccu}	Under voltage quiescent supply current	V_{CC} = 9 V, HINx(1) = 0 V		190	250	µA
I_{qcc}	Quiescent current	V_{CC} = 15 V, HINx(1) = 0 V		560	730	µA
$R_{DS(on)}$	BS driver ON resistance			150		Ω
Low-side						
V_{CC_hys}	V_{CC} UV hysteresis		1.1	1.4	1.6	V
$V_{CCL_th(on)}$	V_{CCL} UV turn-on threshold		10.4	11.6	12.4	V
$V_{CCL_th(off)}$	V_{CCL} UV turn-off threshold		9.0	10.3	11	V
I_{qccu}	Under voltage quiescent supply current	V_{CC} = 10 V, $\overline{SD}$ pulled to 5 V through R_{SD} = 10 kΩ, CIN = LINx(1) = 0 V		600	800	µA
I_{qcc}	Quiescent current	V_{CC} = 15 V, $\overline{SD}$= 5 V, CIN = LINx(1) = 0 V		700	900	µA
V_{SSD}	Smart $\overline{SD}$ unlatch threshold		0.5	0.6	0.75	V
I_{SDh}	$\overline{SD}$ logic “1” input bias current	$\overline{SD}$ = 5 V	25	50	70	µA
I_{SDl}	$\overline{SD}$ logic “0” input bias current	$\overline{SD}$ = 0 V			1	µA

1. *Applied between HINx, LINx and GND for x = U, V, W.*

Table 9. Temperature sensor output

Symbol	Parameter	Test condition	Min.	Typ.	Max.	Unit
V_{TSO}	Temperature sensor output voltage	T_J = 25 °C	0.974	1.16	1.345	V
I_{TSO_SNK}	Temperature sensor sink current capability			0.1		mA
I_{TSO_SRC}	Temperature sensor source current capability		4			mA

Table 10. Sense comparator (V_{CC} = 15 V, unless otherwise is specified)

Symbol	Parameter	Test condition	Min.	Typ.	Max.	Unit
I_{CIN}	CIN input bias current	V_{CIN} = 1 V	-0.2		0.2	µA
V_{ref}	Internal reference voltage		460	510	560	mV
V_{OD}	Open-drain low level output voltage	I_{od} = 5 mA			500	mV
t_{CIN_SD}	C_{IN} comparator delay to $\overline{SD}$	$\overline{SD}$ pulled to 5 V through R_{SD} = 10 kΩ; measured applying a voltage step 0-1 V to pin CIN; 50% CIN to 90% $\overline{SD}$	240	320	410	ns
SR_{SD}	$\overline{SD}$ fall slew rate	$\overline{SD}$ pulled to 5 V through R_{SD}= 10 kΩ; C_L= 1 nF through $\overline{SD}$ and ground; 90% $\overline{SD}$ to 10% $\overline{SD}$		25		V/µs

The comparator stays enabled even if V_{CC} is in the UVLO condition but higher than 4 V.

4 Fault management

The device integrates an open-drain output connected to the $\overline{SD}$ pin. As soon as a fault occurs, the open-drain is activated and the LVGx outputs are forced low. Two types of fault can be identified:

- Overcurrent (OC) sensed by the internal comparator (see more detail in Section 4.1 Smart shutdown function);
- Undervoltage on supply voltage (V_{CC})

Each fault enables the SD open drain for a different time, as described in the following table.

Table 11. Fault timing

Symbol	Parameter	Event time (1)	SD open-drain enable time result (1)(2)
OC	Over-current event	≤ 24 µs	24 µs
		> 24 µs	OC time
UVLO	Under-voltage lockout event	≤ 70 µs	70 µs
		> 70 µs until the VCC_LS exceeds the VCC_LS UV turn ON threshold	UVLO time

1. *Typical value (-40 °C ≤ T_J ≤ 125 °C).*
2. *Without contribution of the RC network on SD.*

Actually, the device remains in a fault condition ($\overline{SD}$ at low logic level and LVGx outputs disabled) for a time also depending on the RC network connected to the $\overline{SD}$ pin. The network generates a time contribution that is added to the internal value.

Figure 4. Overcurrent timing (without contribution of the RC network on $\overline{SD}$)

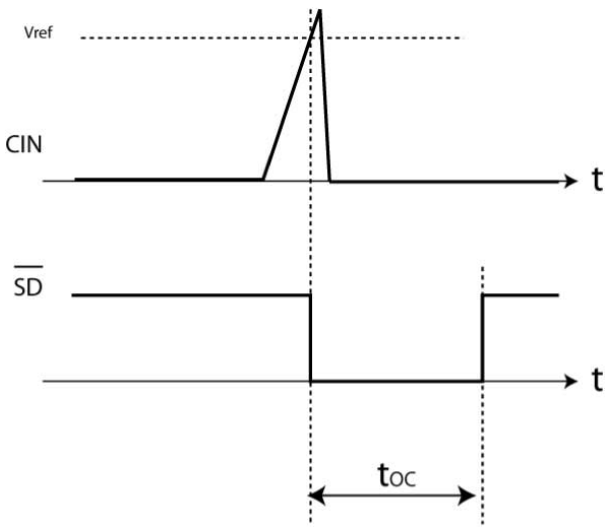

GIPG120520141638FSR

Figure 5. **UVLO timing (without contribution of the RC network on $\overline{SD}$)**

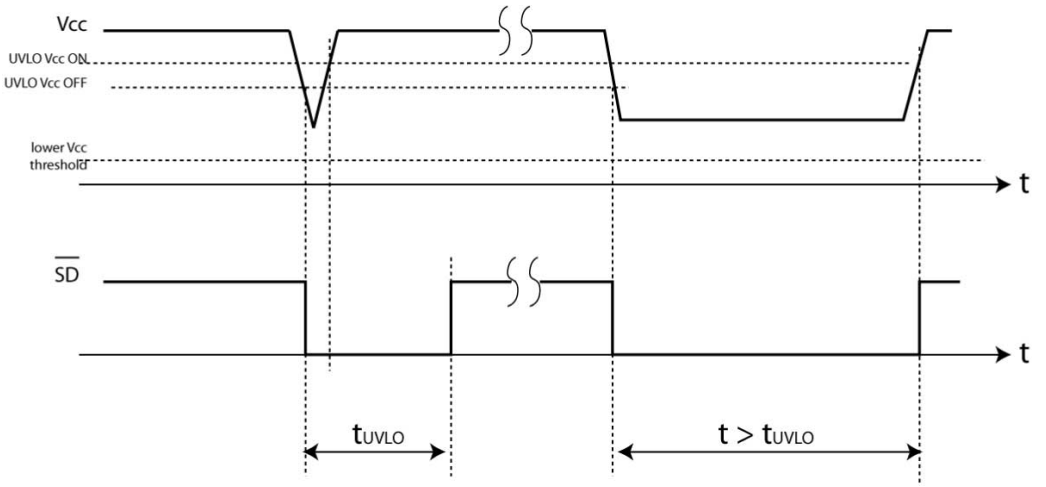

GIPG120520141644FSR

4.1 Smart shutdown function

The device integrates a comparator committed to the fault sensing function. The comparator input can be connected to an external shunt resistor in order to implement a simple overcurrent detection function.

The output signal of the comparator is fed to an integrated MOSFET with the open drain output available on the $\overline{SD}$ input. When the comparator triggers, the device is set in shutdown state and its outputs are all set to low level.

Figure 6. Smart shutdown timing waveforms in case of overcurrent event

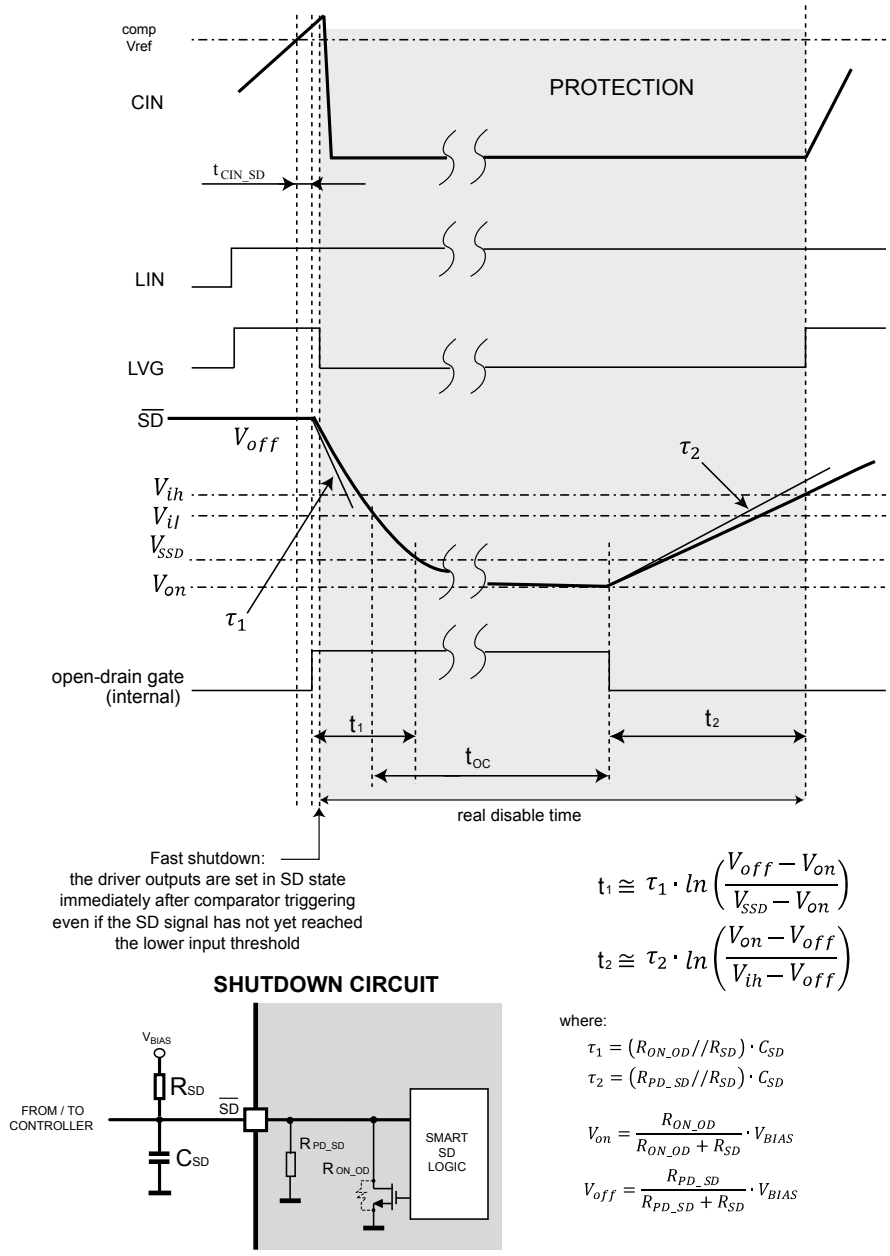

$$t_1 \cong \tau_1 \cdot ln\left(\frac{V_{off} - V_{on}}{V_{SSD} - V_{on}}\right)$$

$$t_2 \cong \tau_2 \cdot ln\left(\frac{V_{on} - V_{off}}{V_{ih} - V_{off}}\right)$$

R_{ON_OD} = V_{OD}/5 mA, see Table 10. Sense comparator (V_{CC} = 15 V, unless otherwise is specified);
R_{PD_SD} (typ.) = 5 V/I_{SDh}

In common overcurrent protection designs, the comparator output is usually connected to the $\overline{SD}$ input and an RC network is connected to this $\overline{SD}$ line in order to provide a mono-stable circuit which implements a protection time that follows the fault condition.

As opposed to common fault detection systems, the device smart shutdown architecture allows the immediate turn-off of output gates driver in case of fault, by minimizing the propagation delay between the fault detection event and the actual switching off of the outputs. In fact, the time delay between the fault and the turning off of the outputs is no longer dependent on the RC value of the external network connected to the pin.

In the smart shutdown circuitry, the fault signal has a preferential path which directly switches off the outputs after the comparator triggering.

At the same time, the internal logic turns on the open-drain output and holds it on until the $\overline{SD}$ voltage goes below the V_{SSD} threshold and the t_{oc} time is elapsed.

The driver outputs restart following the input pins as soon as the voltage at the $\overline{SD}$ pin reaches the higher threshold of the $\overline{SD}$ logic input.

The smart shutdown system provides the possibility to increase the time constant of the external RC network (i.e., the disable time after the fault event) up to very high values without increasing the delay time of the protection.

5 Temperature monitoring solutions

5.1 TSO output

The device integrates a temperature sensor. A voltage proportional to the die temperature is available on the TSO pin. When this function is not used, the pin can be left floating.

Figure 7. V_{TSO} output characteristics vs LVIC temperature

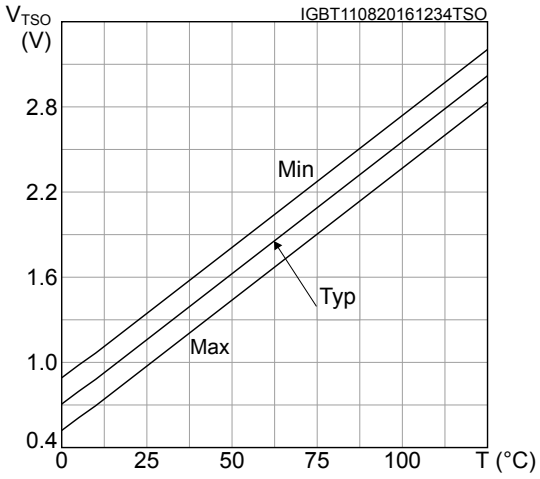

6 Application circuit example

Figure 8. **Application circuit example**

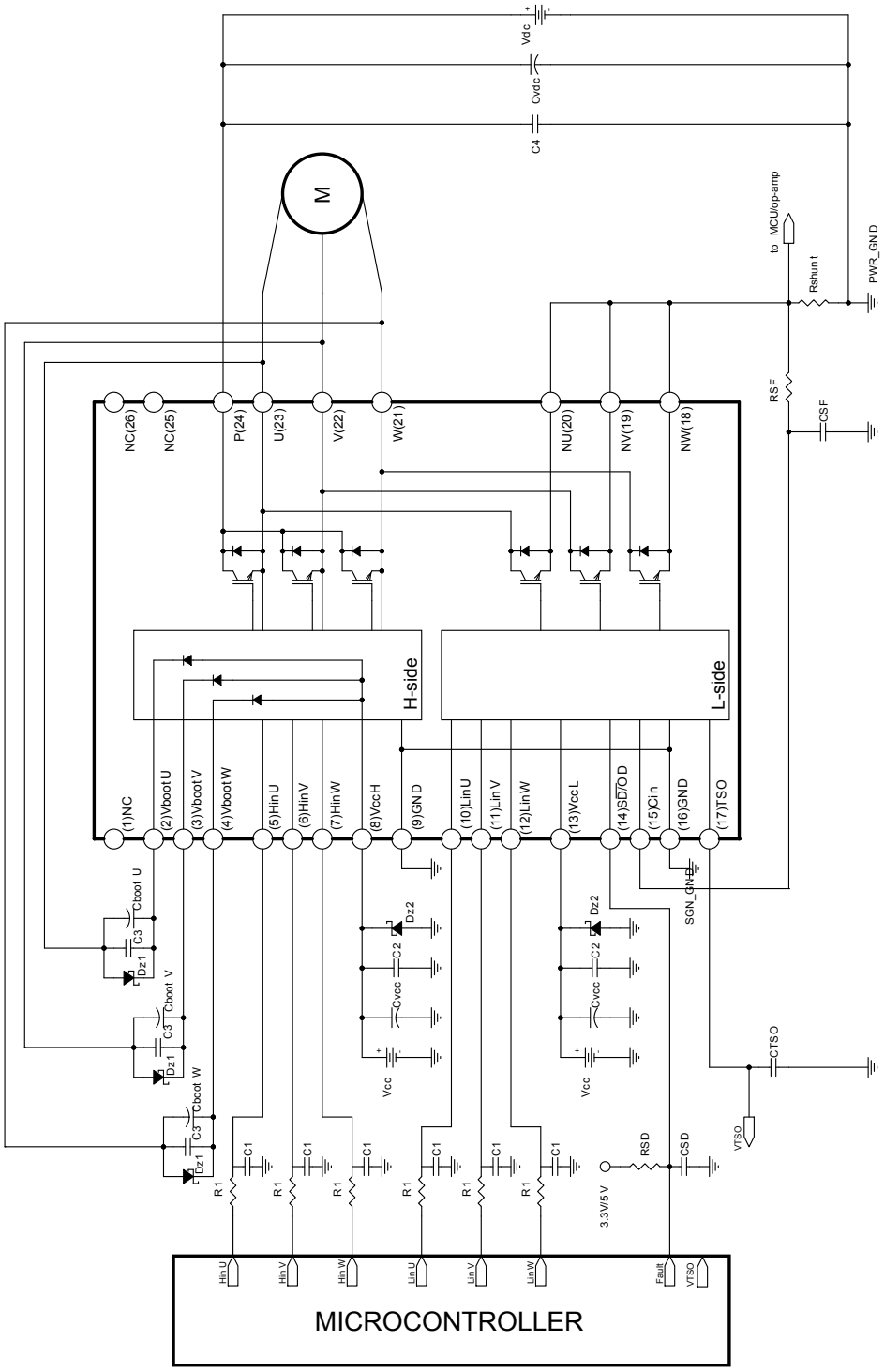

AMG171020161050SA

Application designers are free to use a different scheme according to the device specifications.

6.1 Guidelines

1. Input signals HIN, LIN are active-high logic. A 100 kΩ (typ.) pull-down resistor is built-in for each input pin. To prevent input signal oscillations, the wiring of each input should be as short as possible and the use of RC filters (R_1, C_1) on each input signal is suggested. The filters should be with a time constant of about 100 ns and placed as close as possible to the IPM input pins.
2. The use of a bypass capacitor C_{VCC} (aluminum or tantalum) can reduce the transient circuit demand on the power supply. Besides, to reduce any high-frequency switching noise distributed on the power lines, a decoupling capacitor C_2 (100 to 220 nF, with low ESR and low ESL) should be placed as close as possible to each V_{CC} pin and in parallel with the bypass capacitor.
3. The use of an RC filter (R_{SF}, C_{SF}) prevents protection circuit malfunctions. The time constant (R_{SF} x C_{SF}) should be set to 1 µs and the filter must be placed as close as possible to the CIN pin.
4. The $\overline{SD}$ is an input/output pin (open-drain type if it is used as output). It should be pulled up to a power supply (that is, MCU bias at 3.3/5 V) by a resistor value, which can keep the I_{od} no higher than 5 mA (V_{OD} ≤ 500 mV when open-drain MOSFET is ON). The filter on $\overline{SD}$ should be sized to get a desired restarting time after a fault event and placed as close as possible to the $\overline{SD}$ pin.
5. A decoupling capacitor C_{TSO} (between 1 nF and 10 nF) placed close to the MCU can be used to increase the noise immunity of the TSO thermal sensor.
6. The decoupling capacitor C_3 (100 to 220 nF with low ESR and low ESL) in parallel with each C_{boot} filters high-frequency disturbances. Both C_{boot} and C_3 (if present) should be placed as close as possible to the U,V,W and V_{boot} pins. Bootstrap negative electrodes should be connected to the U,V,W terminals directly and separated from the main output wires.
7. To prevent overvoltage on the V_{CC} pin, a zener diode (Dz1) can be used. Similarly, on the V_{boot} pin, a zener diode (Dz2) can be placed in parallel with each C_{boot}.
8. The use of the decoupling capacitor C_4 (100 to 220 nF, with low ESR and low ESL) in parallel with the electrolytic capacitor C_{Vdc} prevents surge destruction. Both capacitors C_4 and C_{Vdc} should be placed as close as possible to the IPM (C_4 has priority over C_{vdc}).
9. By integrating an application-specific type HVIC inside the module, direct coupling to the MCU terminals without an optocoupler is possible.
10. Low inductance shunt resistors should be used for phase leg current sensing.
11. In order to avoid malfunctions, the wiring on N pins, the shunt resistor and PWR_GND should be as short as possible.
12. The connection of the SGN_GND to the PWR_GND at one point only (close to the shunt resistor terminal) can reduce the impact of power ground fluctuation.

These guidelines ensure the device specifications for application designs. For further details, please refer to the relevant application note.

Table 12. Recommended operating conditions

Symbol	Parameter	Test conditions	Min.	Typ.	Max.	Unit
V_{PN}	Supply voltage	Applied among P-Nu, N_V, N_w		300	400	V
V_{CC}	Control supply voltage	Applied to V_{CC}-GND	13.5	15	18	V
V_{BS}	High-side bias voltage	Applied to V_{BOOTi}-OUT_i for i = U, V, W	13		18	V
t_{dead}	Blanking time to prevent arm-short	For each input signal	1.0			µs
f_{PWM}	PWM input signal	-40 °C < T_C < 100 °C -40 °C < T_J < 125 °C			20	kHz
T_C	Operating case temperature				100	°C

7 Electrical characteristics (curves)

Figure 9. Output characteristics

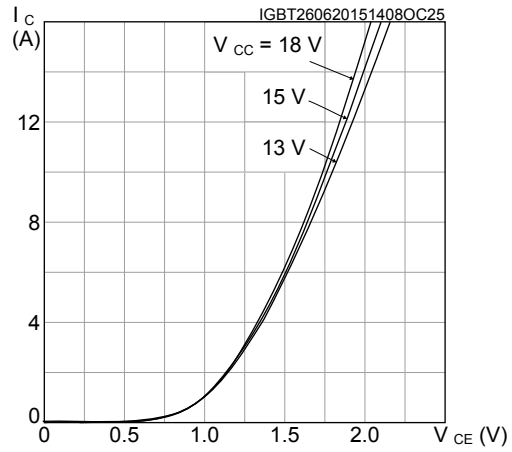

Figure 10. $V_{CE(sat)}$ vs collector current

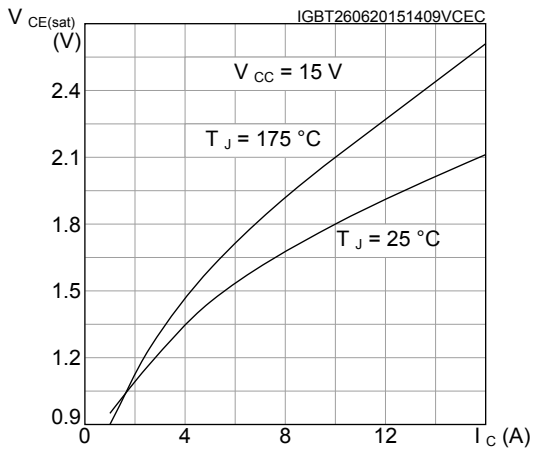

Figure 11. I_C vs case temperature

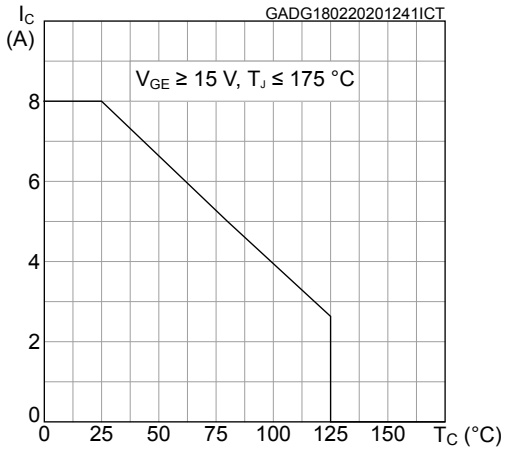

Figure 12. Diode V_F vs forward current

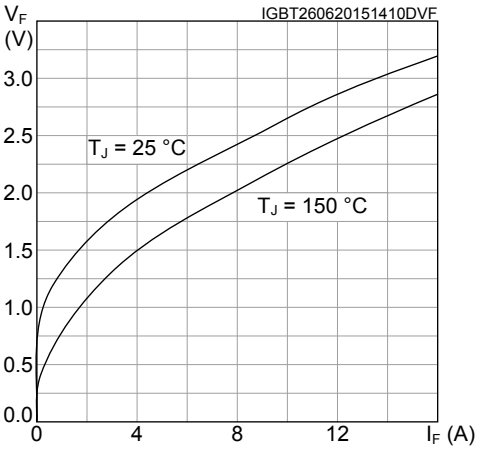

Figure 13. E_{on} switching energy vs collector current

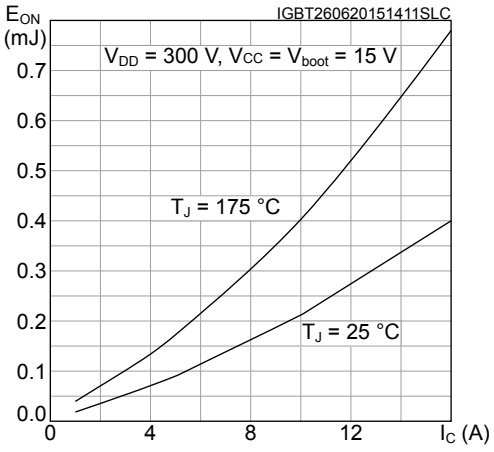

Figure 14. E_{off} switching energy vs collector current

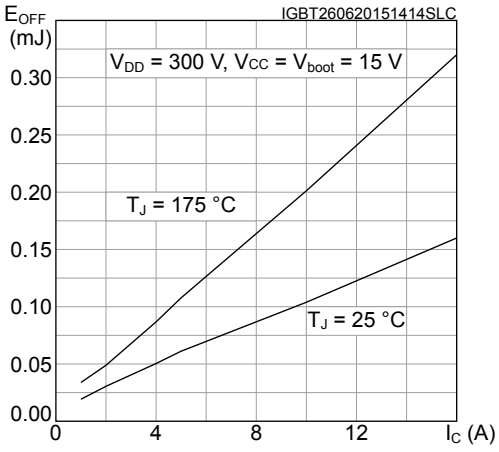

Figure 15. Thermal impedance

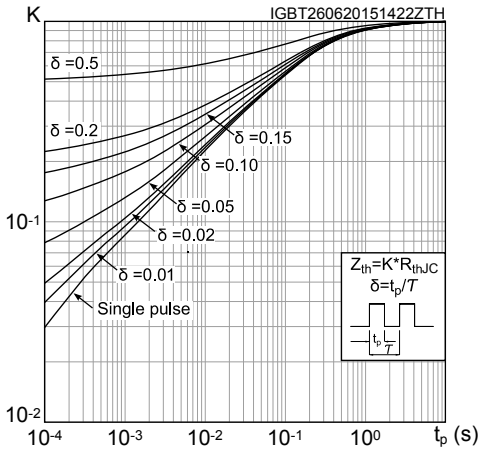

8 Package information

In order to meet environmental requirements, ST offers these devices in different grades of ECOPACK packages, depending on their level of environmental compliance. ECOPACK specifications, grade definitions and product status are available at: www.st.com. ECOPACK is an ST trademark.

8.1 SDIP2F-26L type X2 package information

Figure 16. SDIP2F-26L type X2 package outline

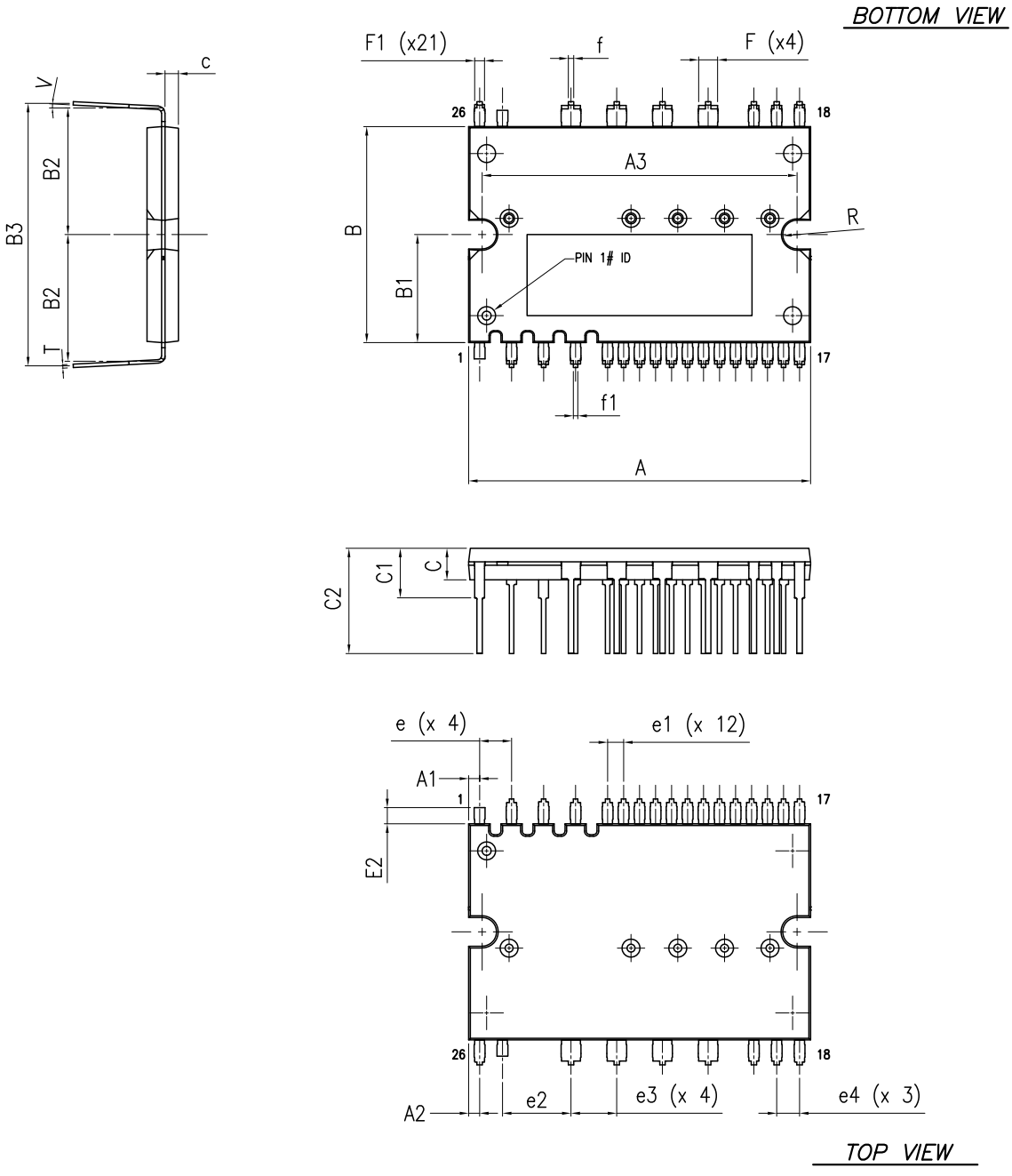

8450803_5_type X2

Table 13. SDIP2F-26L type X2 package mechanical data

Ref.	Dimensions (mm)		
	Min.	Typ.	Max.
A	37.50	38.00	38.50
A1	0.97	1.22	1.47
A2	0.97	1.22	1.47
A3	34.70	35.00	35.30
B	23.50	24.00	24.50
B1		12.00	
B2	13.90	14.40	14.90
B3	28.80	29.30	29.80
c	1.45	1.50	1.55
C	3.30	3.50	3.70
C1	5.00	5.50	6.00
C2	11.20	11.70	12.20
e	3.356	3.556	3.756
e1	1.578	1.778	1.978
e2	7.42	7.62	7.82
e3	4.88	5.08	5.28
e4	2.34	2.54	2.74
E2		1.80	
f	0.45	0.60	0.75
f1	0.35	0.50	0.65
F	1.95	2.10	2.25
F1	0.95	1.10	1.25
R	1.550	1.575	1.600
T	0.375	0.400	0.425
V	0°		5°

Revision history

Table 14. **Document revision history**

Date	Revision	Changes
14-Feb-2022	1	First release.

Contents

1 **Internal schematic diagram and pin configuration** 2
2 **Absolute maximum ratings** 4
2.1 Thermal data 5
3 **Electrical characteristics** 6
3.1 Inverter parts 6
3.2 Control/protection parts 8
4 **Fault management** 10
4.1 Smart shutdown function 11
5 **Temperature monitoring solutions** 14
5.1 TSO output 14
6 **Application circuit example** 15
6.1 Guidelines 16
7 **Electrical characteristics (curves)** 17
8 **Package information** 19
8.1 SDIP2F-26L type X2 package information 19
Revision history 21

IMPORTANT NOTICE – PLEASE READ CAREFULLY

STMicroelectronics NV and its subsidiaries (“ST”) reserve the right to make changes, corrections, enhancements, modifications, and improvements to ST products and/or to this document at any time without notice. Purchasers should obtain the latest relevant information on ST products before placing orders. ST products are sold pursuant to ST’s terms and conditions of sale in place at the time of order acknowledgement.

Purchasers are solely responsible for the choice, selection, and use of ST products and ST assumes no liability for application assistance or the design of Purchasers’ products.

No license, express or implied, to any intellectual property right is granted by ST herein.

Resale of ST products with provisions different from the information set forth herein shall void any warranty granted by ST for such product.

ST and the ST logo are trademarks of ST. For additional information about ST trademarks, please refer to www.st.com/trademarks. All other product or service names are the property of their respective owners.

Information in this document supersedes and replaces information previously supplied in any prior versions of this document.

© 2022 STMicroelectronics – All rights reserved

Unikeyic Electronics

Global Electronic Components Distributor

Click to view pricing, inventory, delivery, and lifecycle information:

STMicroelectronics:

E-L6219DSA L5991D013TR L6399DTR L78L12ABD-TR LD39050PU33R SM30T18AY STM6717SJWY6F TSV324AIYPT STB36NM60ND STM32L496RGT6 TSV611AILT SMC50J36CA STM32F103VGT6 LCP02-150B1RL ST25DV16KC-IE6C3 STISO621 TSL6204IYPT VIPER011LS STM32F103RBH6 STM6717TWWY6F L6228PD L9904TR LD1117DTC-R M95160-DRDW8TP/K SM4T15CAY STM32F103C6T7ATR L6389ED SCT015W120G3-4AG STBC02AJR STM6719SHWB6F