MCE03 Series

AC-DC POWER SUPPLIES

3W



The MCE03 series of PCB mount single output AC-DC medical power supplies delivers a power output of 3W and offers single output voltages ranging from 3.3V to 48VDC. The MCE03 series, which is available in open-frame and encapsulated mechanical formats, is specifically designed for medical applications with 2 x MOPP isolation and is approved for Class II applications.

With world-wide medical safety approvals, class B compliance for conducted and radiated emissions, high efficiency, high reliability, 4kVAC isolation, the MCE series benefits system designers with easy integration into a wide range of BF rated medical applications including imaging, patient treatment, surgical equipment and home healthcare applications.

Features

- Single outputs 3.3V to 48VDC
- Input range 80 to 264VAC
- Available in open frame and encapsulated formats
- High efficiency, up to 81%
- 4kVAC input to output isolation
- Class B conducted and radiated emissions
- IEC 60601-1 medical safety agency approvals, 2 x MOPP
- IEC class II insulation rating
- -25°C to +70°C operating temperature
- Overvoltage, overload and short circuit protection

Applications

Healthcare

Home Healthcare

Medical Diagnostic

Dimensions

MCE03:
40.6 x 19.1 x 19.1mm (1.60 x 0.75 x 0.75")

MCE03-P:
38.1 x 16.5 x 16.5mm (1.50 x 0.65 x 0.65")

Models & Ratings

Model Number[1]	Output Voltage	Output Current	Efficiency[2]	Output Power
MCE03US03	3.3VDC	910mA	75%	3W
MCE03US05	5.0VDC	600mA	79%	3W
MCE03US09	9.0VDC	333mA	79%	3W
MCE03US12	12.0VDC	250mA	80%	3W
MCE03US15	15.0VDC	200mA	80%	3W
MCE03US24	24.0VDC	125mA	81%	3W
MCE03US48	48.0VDC	63mA	80%	3W

Notes:

1. For Open Frame version add suffix -P to model number, e.g. MCE03US12-P.
2. Typical efficiency at 115VAC and full load.

Summary

Characteristic	Minimum	Typical	Maximum	Units	Notes & Conditions
Input Voltage Range	80		264	VAC	Derate from 100% at 90 VAC to 90% at 80VAC
No Load Input Power			0.3	W	
Efficiency		80		%	Model dependent, see Models & Ratings
Operating Temperature	-25		+70	°C	Derate output linearly from 100% at 50°C to 50% at 70°C
EMC	EN55011 Level B Conducted & Radiated, EN61000-3-2, EN61000-3-3, EN60601-1-2				
Safety Approvals	IEC60601-1, EN60601-1, ES60601-1				

Input

Characteristic	Minimum	Typical	Maximum	Units	Notes & Conditions
Input Voltage Range	80		264	VAC	Derate from 100% at 90VAC to 90% at 80VAC
Input Frequency	47		63	Hz	
Input Current - Full Load		0.06/0.04		A rms	At 115/230VAC
No Load Input Power			0.3	W	
Inrush Current			40	A	At 230VAC, cold start 25°C
Earth Leakage Current					Class II construction no earth
Input Protection	External T1.0 A/300 VAC fuse required in line and neutral				

Output

Characteristic	Minimum	Typical	Maximum	Units	Notes & Conditions
Output Voltage	3.3		48	VDC	
Initial Set Accuracy			3/2	%	3% for 3V3 & 5V models, 2% for others at 50% load
Minimum Load	0			A	No minimum load required
Line Regulation			1	%	
Load Regulation			6/4		6% for 3V3 & 5V models, 4% for other models
Start Up Delay			2	s	
Start Up Rise Time			35	ms	
Hold Up Time	8	14		ms	At full load and 115VAC
Transient Response			4	%	Deviation, recovery within 1% in less than 500µs for a 25% load change
Ripple & Noise			100	mV pk-pk	3.3-9V models, 20MHz bandwidth
			1	% pk-pk	12V to 15V models, 20MHz bandwidth
			1.5	% pk-pk	24V to 48V models, 20MHz bandwidth
Patient Leakage Current			65	µA	At 264VAC, 60Hz
Overvoltage Protection	115		145	% Vnom	220% typical for 3V3 model, auto recovery
Overload Protection	110		190	%	
Short Circuit Protection					Trip & Restart (hiccup mode)
Temperature Coefficient			0.05	%/°C	

General

Characteristic	Minimum	Typical	Maximum	Units	Notes & Conditions
Efficiency		80		%	Model dependent
Isolation: Input to Output	4000			VAC	2 x MOPP, suitable for BF applications
Switching Frequency	17		75	kHz	Varies with load
Power Density			11.9	W/cm^3	For '-P' version
Mean Time Between Failure	550	600		khrs	MIL-HDBK-217F, +25°C GB
Weight		10 (0.025)		g (lb)	Open frame versions (-P)
		30 (0.067)			Encapsulated version

Environmental

Characteristic	Minimum	Typical	Maximum	Units	Notes & Conditions
Operating Temperature	-25		+70	°C	Derate output linearly from 100% at 50°C to 50% at 70°C
Storage Temperature	-40		+85	°C	
Cooling	Convection-cooled				
Humidity			95	%RH	Non-condensing
Operating Altitude			5000	m	
Shock	IEC68-2-27, 30g, 11ms half sine, 3 times in each of 6 axes				
Vibration	IEC68-2-6, 2g, 10Hz to 500kHz, 10 mins/cycle, 60 mins each cycle				

Efficiency Graphs

MCE03US12-P

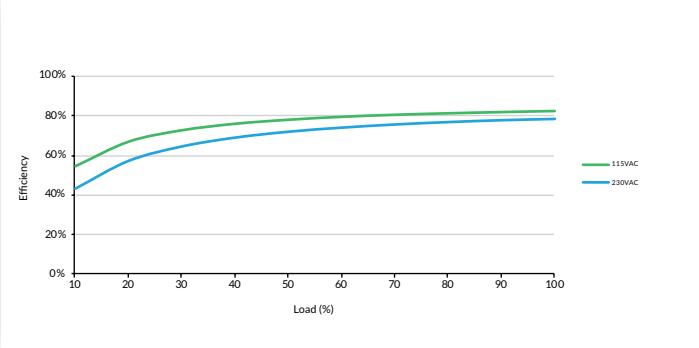

MCE03US24-P

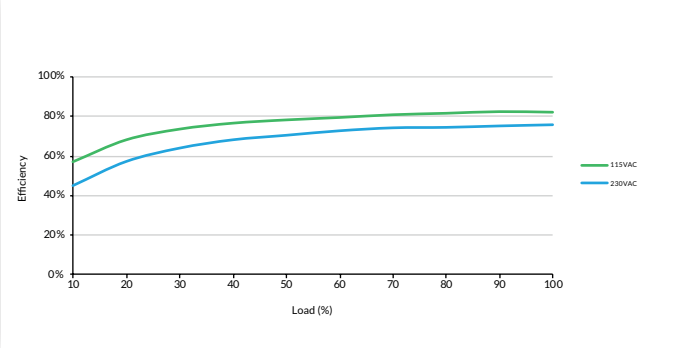

EMC: Emissions

Phenomenon	Standard	Test Level	Notes & Conditions
Conducted	EN55011	Class B	If output is connected to ground, additional external components will be required. See application notes
Radiated	EN55011	Class B	
Harmonic Current	EN61000-3-2	Class A	
Voltage Flicker	EN61000-3-3		

EMC: Immunity

Phenomenon	Standard	Test Level	Criteria	Notes & Conditions
Medical	EN60601-1-2	As below	As below	
ESD Immunity	EN61000-4-2	±8kV contact, ±15kV air discharge	A	
Radiated Immunity	EN61000-4-3	10 V/m	A	
EFT/Burst	EN61000-4-4	3	A	
Surge	EN61000-4-5	2	A	Line to line
Conducted	EN61000-4-6	10Vrms	A	
Magnetic Fields	EN61000-4-8	30A/m	A	
Dips and Interruptions	EN61000-4-11 (115VAC)	70% U_T (80.5VAC) for 100ms	A	
		40% U_T (46VAC) for 200ms	B	
		<5% U_T (0VAC) for 10ms	A	
		<5% U_T (0VAC) for 5000ms	B	
	EN61000-4-11 (230VAC)	70% U_T (161VAC) for 100 ms	A	
		40% U_T (92VAC) for 200ms	A	
		<5% U_T (0VAC) for 10ms	A	
		<5% U_T (0VAC) for 5000ms	B	

Safety Approvals

Certification	Standard	Notes & Conditions
CB	IEC60601-1	Medical, 2 x MOPP
UL	ES60601-1/CSA-C22.2 No.60601-1:14	Medical, 2 x MOPP
TUV	EN60601-1	Medical, 2 x MOPP
CE	Meets all applicable directives	
UKCA	Meets all applicable legislation	

Application Notes

EMC with output grounded

This product is designed for class II operation, but if there is a requirement to connect the output to ground then additional components as shown below can be added to improve emissions.

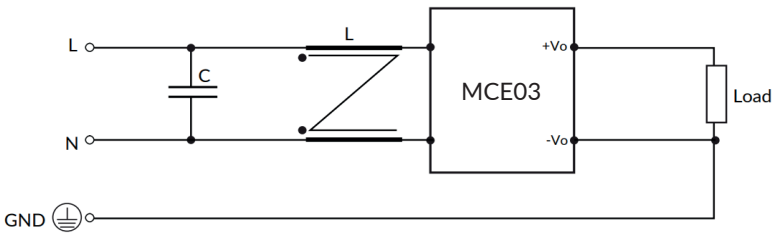

Suggested value - C: X2 cap, 0.22µF/275V, 10% MKP HJC.
- L: CMCK DIP UU-9.8 Φ0.27*95T 17.6mH (min)

Mechanical Details

Encapsulated

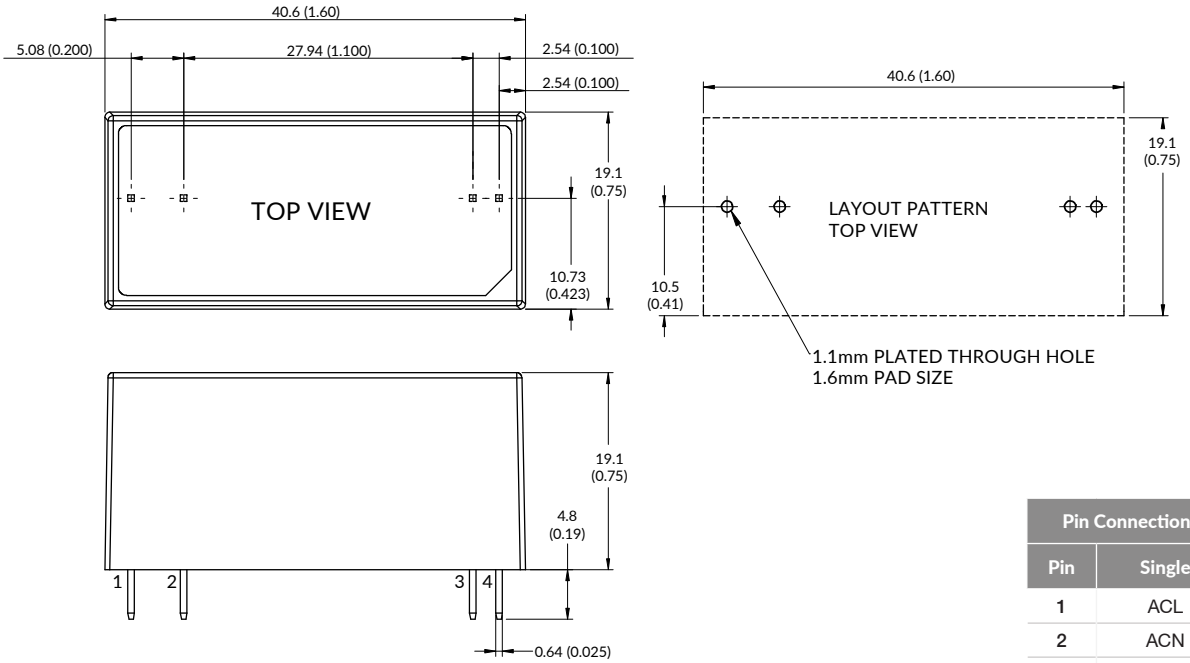

Pin Connections	
Pin	Single
1	ACL
2	ACN
3	+Vout
4	-Vout

Open Frame (-P)

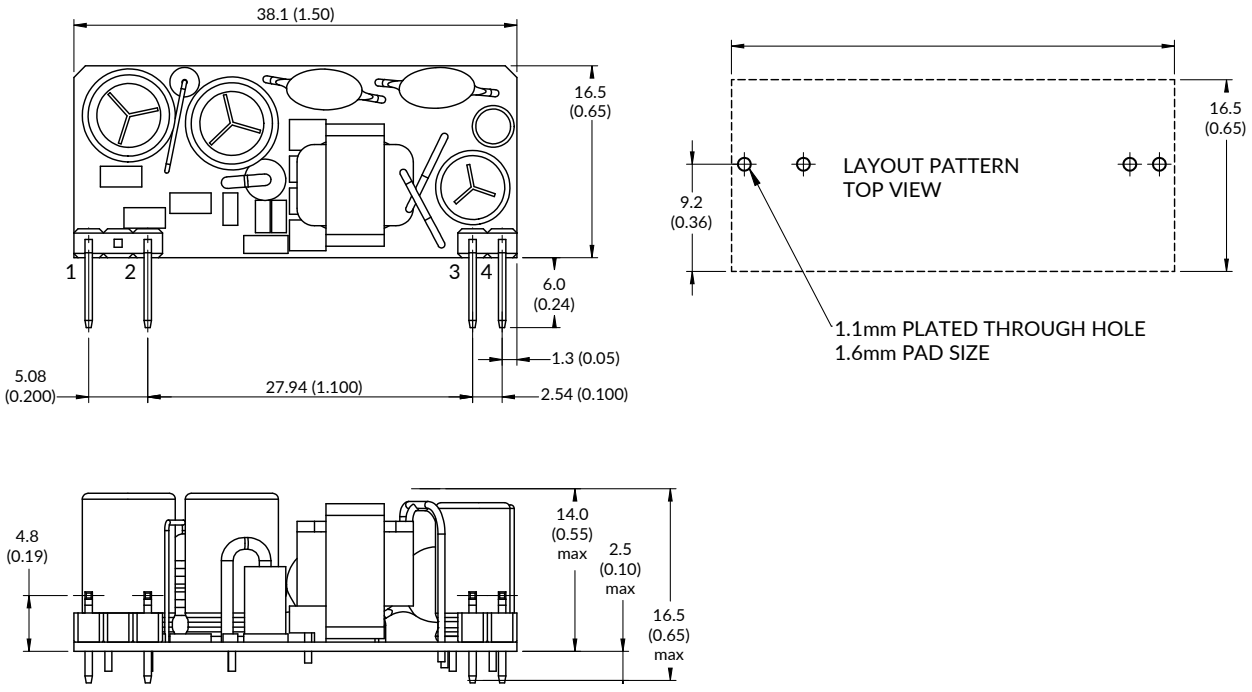

Notes:

1. Dimensions in mm (inches).
2. Weight: Open frame versions (-P): 10g (0.025lbs) Encapsulated: 30g (0.067lbs)
3. Tolerances: x.xx = ± 0.02 (x.x = ±0.5), x.xxx = ± 0.01 (x.xx = ±0.25)

Unikeyic Electronics

Global Electronic Components Distributor

Click to view pricing, inventory, delivery, and lifecycle information:

XP Power:

JCK4012D12 MCE20US24-P FDMM06SFR JCE0624D12 JMR1024D15 MCE10US15-P MTC15028S05 MTC5028S15 ITQ2405SA MTC3028D15 ECP40US24 JTM2024D05 MCE03US05-P ECS130US48 IV4805SA MCE03US24-P MCE40US24 EHL20US03 EHL20US05 JCD0405D15 VEP PLUG AU AHM IEC CLIP (-A) EHL05US03 F101R IE2415SH MCE03US48-P MCE40US03-P RDF15072S12 HPA1K5PS36 JCD0424D09