CTVF-0 Series

From 1.0 µH to 390 µH



SPECIFICATIONS

Part numbers indicate inductance tolerance available.
K = ±10%, L = ±15%

Part Number	Inductance (µH)	Rated Current (A)	DCR Max. (Ω)	Physical Dimensions (in/mm) A Max.	B Max.	C ±0.015/0.38	D ±0.015/0.38
CTVF-0-1R0L-25	1.0	21.8	0.002	0.60/15.2	0.68/17.3	0.42/10.7	0.068/1.73
CTVF-0-1R0L-10	1.0	16.7	0.003	0.50/12.7	0.75/19.1	0.42/10.7	0.054/1.37
CTVF-0-3R3L-10	3.3	12.7	0.005	0.50/12.7	1.0/25.4	0.42/10.7	0.054/1.37
CTVF-0-4R7L-03	4.7	7.4	0.021	0.51/13.0	0.75/19.1	0.42/10.7	0.035/0.89
CTVF-0-4R7L-05	4.7	8.9	0.012	0.50/12.7	0.75/19.1	0.42/10.7	0.042/1.07
CTVF-0-4R7L-10	4.7	11.9	0.012	0.50/12.7	1.0/25.4	0.42/10.7	0.054/1.37
CTVF-0-4R7L-20	4.7	16.4	0.004	0.53/13.5	1.2/30.5	0.42/10.7	0.068/1.73
CTVF-0-100K-03	10	5.9	0.023	0.50/12.7	0.75/19.1	0.42/10.7	0.035/0.89
CTVF-0-100K-05	10	7.1	0.017	0.50/12.7	0.75/19.1	0.42/10.7	0.042/1.07
CTVF-0-100K-10	10	11.8	0.015	0.52/13.2	1.0/25.4	0.42/10.7	0.054/1.37
CTVF-0-100K-20	10	17	0.006	0.75/19.1	1.8/45.7	0.60/15.2	0.075/1.91
CTVF-0-150K-03	15	6.8	0.025	0.50/12.7	1.0/25.4	0.42/10.7	0.035/0.89
CTVF-0-150K-10	15	9.8	0.02	0.52/13.2	1.0/25.4	0.42/10.7	0.054/1.37
CTVF-0-220K-03	22	7.4	0.035	0.50/12.7	1.0/25.4	0.42/10.7	0.035/0.89
CTVF-0-220K-05	22	8.9	0.023	0.50/12.7	1.0/25.4	0.42/10.7	0.042/1.07
CTVF-0-220K-10	22	13	0.015	0.66/16.8	1.3/33.0	0.42/10.7	0.060/1.52
CTVF-0-270K-05	27	7.1	0.024	0.50/12.7	1.0/25.4	0.49/12.5	0.042/1.07
CTVF-0-330K-12	33	11.3	0.017	0.70/17.8	1.3/33.0	0.55/14.0	0.060/1.52
CTVF-0-470K-03	47	4.3	0.05	0.55/14.0	1.0/25.4	0.42/10.7	0.035/0.89
CTVF-0-470K-05	47	6.0	0.035	0.65/16.5	1.1/28.0	0.70/17.8	0.042/1.07
CTVF-0-470K-10	47	8.7	0.022	0.85/21.6	1.3/33.0	0.70/17.8	0.060/1.52
CTVF-0-820K-03	82	2.8	0.11	0.50/12.7	0.65/16.5	0.375/9.5	0.028/0.71
CTVF-0-101K-01	100	1.8	0.19	0.40/10.2	0.90/22.9	0.30 /7.6	0.020/0.51
CTVF-0-101K-03	100	3.8	0.072	0.55/14.0	1.2/30.5	0.70/17.8	0.035/0.89
CTVF-0-101K-05	100	5.5	0.055	0.65/16.5	1.3/33.0	0.70/17.8	0.042/1.07
CTVF-0-151K-03	150	2.8	0.14	0.60/15.2	1.2/30.5	0.43/10.9	0.028/0.71
CTVF-0-151K-05	150	5.2	0.065	0.65/16.5	1.3/33.0	0.70/17.8	0.042/1.07
CTVF-0-181K-05	180	3.3	0.11	0.60/15.2	1.2/30.5	0.43/10.9	0.035/0.89
CTVF-0-221K-03	220	2.1	0.21	0.55/14.0	1.2/30.5	0.42/10.7	0.025/0.64
CTVF-0-271K-04	270	2.1	0.25	0.95/24.0	0.72/18.3	0.71/18.0	0.030/0.76
CTVF-0-271K-10	270	3.6	0.16	1.1/28.0	1.0/25.4	0.72/18.3	0.038/0.97
CTVF-0-391K-03	390	3.0	0.25	1.1/28.0	1.0/25.4	0.72/18.3	0.035/0.89
CTVF-0-391K-05	390	3.1	0.19	1.1/28.0	1.0/25.4	0.72/18.3	0.038/0.97

CHARACTERISTICS

Description: Radial leaded power Inductor.
Applications: Used in switching regulators, power amplifiers, power supplies, SCR and Triac controls, speaker crossover networks, RFI suppression and filters.
Inductance Tolerance: ±10%, ±15%
Operating Temperature: -55°C to +125°C
Rated Current: Based on the inductance change within 10% of initial value.
Testing: Inductance is tested on an HP4284A at 15.75KHz.
Sleeving: Poly-Olefin shrink tube.
Packaging: Bulk.
Marking: Parts are marked with inductance code.
Miscellaneous: **RoHS Compliant.**
Additional Information: Additional electrical & physical information available upon request.
Samples available. See website for ordering information.

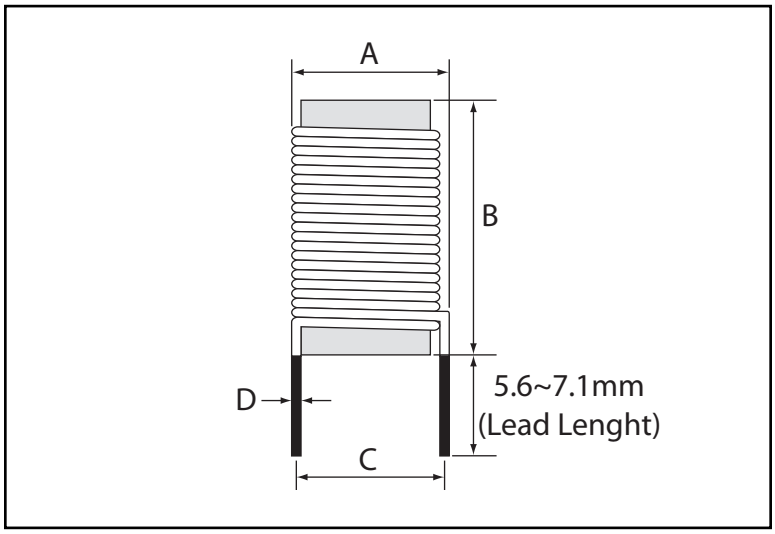

Copyright © 2012 by CT Magnetics, DBA Central Technologies. All rights reserved.
CT Magnetics reserves the right to make improvements or change specifications without notice

Unikeyic Electronics

Global Electronic Components Distributor

Click to view pricing, inventory, delivery, and lifecycle information:

Central Technologies:

CTCDRH127F-820M CTM2474F-121L CTMLP080504CF-R24M CT0805LSF-123J CTGS54F-101K
CTMC1210SF-R68K CTMC1812SF-2R7J CT0402CSF-22NG CTCB0603F-102S CTCDRH127/LDF-2R4N
CTGSR105BF-181M CTSLF1045TF-100M CTCB1206F-300U CTCDRH6D38F-7R4N CTCDRH104RF-150
CTLQH3KSF-152M CTMC1210SF-330J CTMC1812SF-680J CT0603LSF-472J CTC2F-R27K
CTCDRH5D28F-5R6N CTGSR105BF-221M CTM3F-R47J CT262LYF-472J CTAC1008F-10NK
CTCDRH125F-221M CTGS32F-1R2M CTLQ1812CF-470K CTMC1812SF-8R2J CTS7F-122K