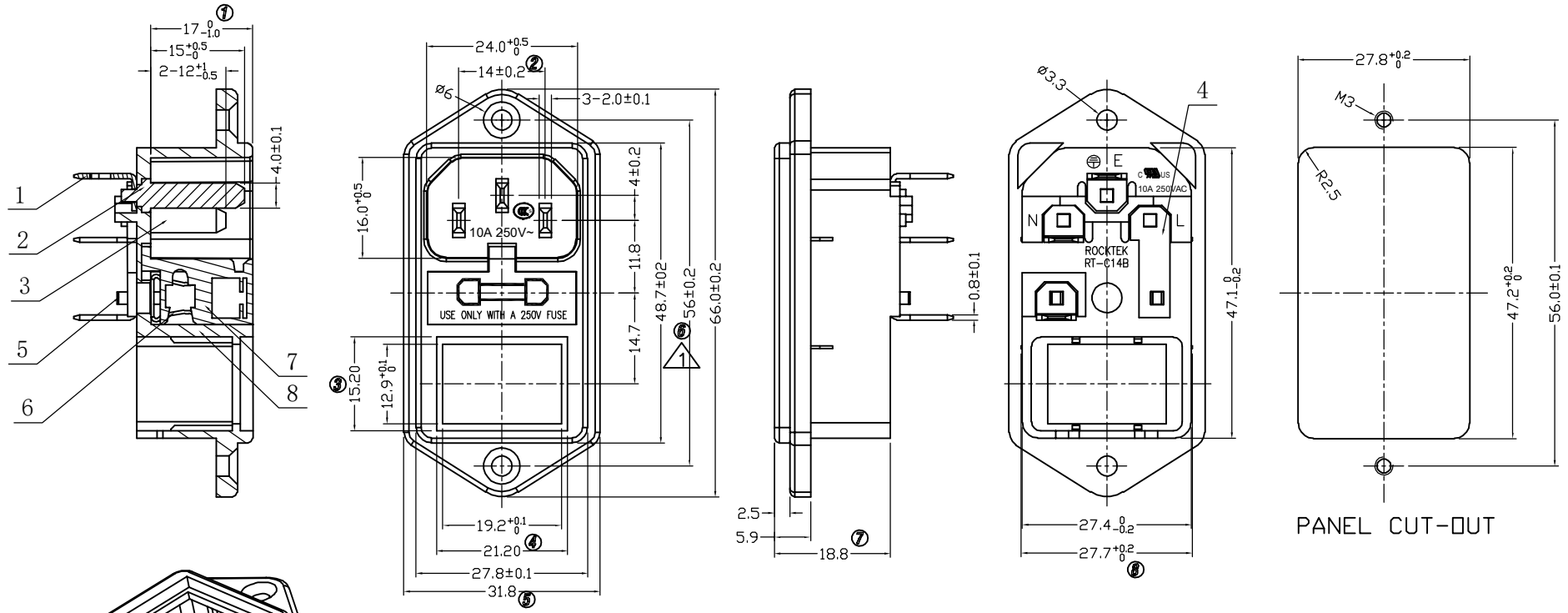

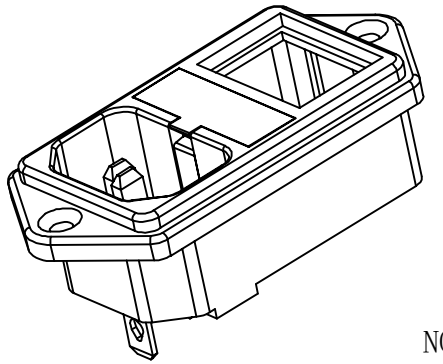

NOTES:

1. Rating: 10A 125/250VAC 15A 125/250VAC
2. CONTACT RESISTANCE: 50mΩ Max
3. INSULATION RESISTANCE: 100MΩ Min,at 500VDC
4. WITHSTAND VOLTAGE: 2000VAC 0.5mA 1 minute

NO.	PART NAME	MATERIAL	Q'TY
8	本体	PA66	1
7	盖子	PA66	1
6	保险丝端子	C5191 1/2H Ag-plating	2
5	3#PIN	C1100 1/2H Ag-plating	2
4	连接片	C2680 1/2H Tin-plating	1
3	2#PIN	C2680 1/2H Ni-plating	2
2	1#PIN	C2680 1/2H Ni-plating	1
1	1#端子	C2680 1/2H Tin-plating	3

NO	DESCRIPTION
5	
4	
3	
2	
1	56±0.1→56±0.2 24.02.23

NO	DESCRIPTION
10	
9	
8	
7	
6	

DIMENSIONAL TOLERANCES	
RANGE	TOLERANCE
X	±0.30
X.X	±0.20
X.XX	±0.10
ANGLES	±1°

APPROVED	CHECKED	DESIGN	DRAWN
			LMC 2020.11.14

LEGION ELECTRONIC & HARDWARE CO., LTD.

ALL SIZE ARE IN	MM
SCALE	NO
MAT'L	***
MATERIAL NO.	RT-C14B-G00-13-R

DRAWING NO.	REV.
WIF123055	A1