1 Product Identification

GDMI	1608	M	1R0	K	T	F
①	②	③	④	⑤	⑥	⑦

① Product Symbol

② Dimensions（see 3）

③ Material Code（Ferriite materials, from small to large: L；M；N；Q；H 等）

④ Inductance Value (1R0:1.0μH)

⑤ Inductance Tolerance (J:±5%;K:±10%; M:±20%; N:±30%)

⑥ Packaging Style (B: Bulk; T: Tape & Reel)

⑦ Lead Free

2 Appearance, Dimensions

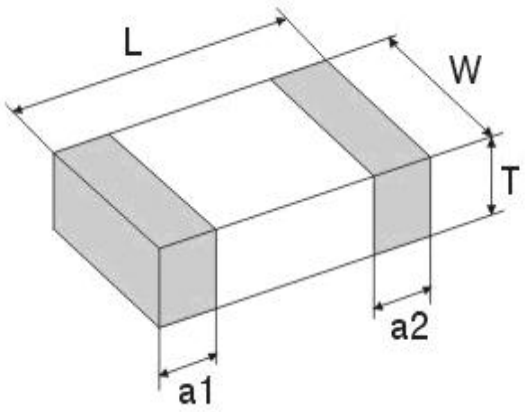

Type	Dimensions (mm) [inch]			
	L	W	T	a1, a2
1608（0603）	1.6±0.15	0.8±0.15	0.8±0.15	0.30±0.20

3 Rating

Operating Temperature Range : -55 to +125℃

Part No.	L (μH)	Q min	L、Q (MHz)	SRF (MHz)Min	DCR (Ω)Max	Ir (mA)Max
GDMI1608M1R0KTF	1.0±10%	35	10	75	0.6	25

4 Curve

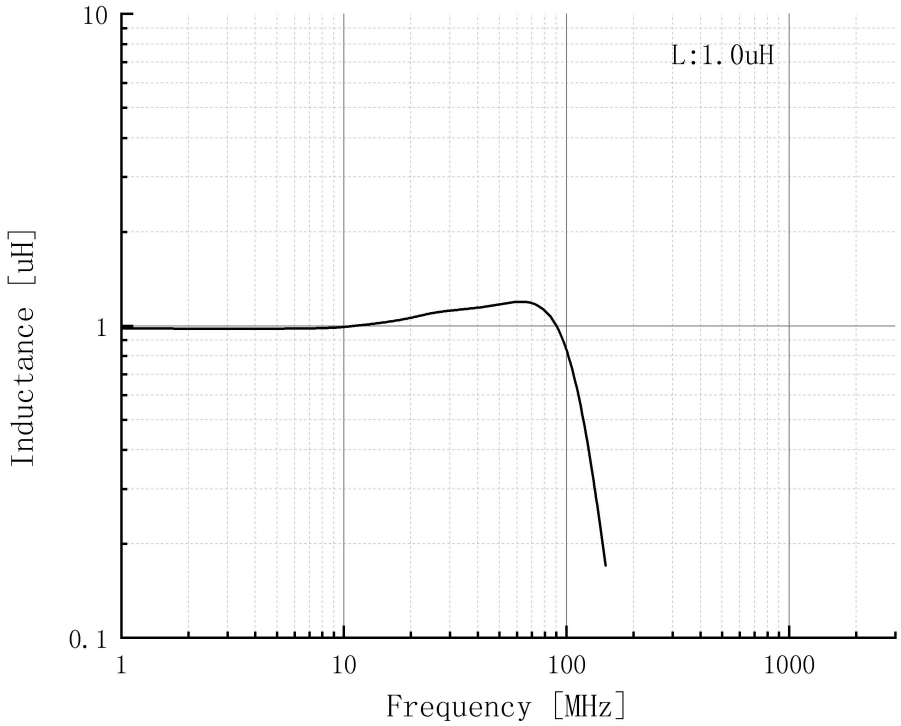

5 Packaging

(1) Dimensions of Reel（mm）

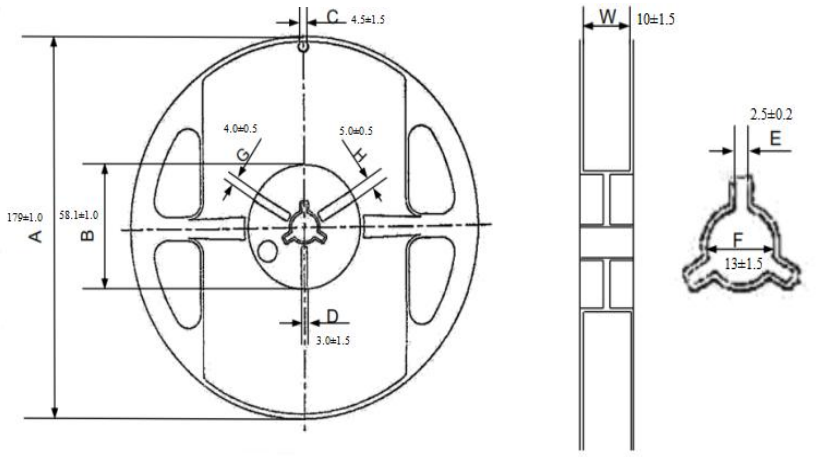

(2) Dimensions of Tape (mm):

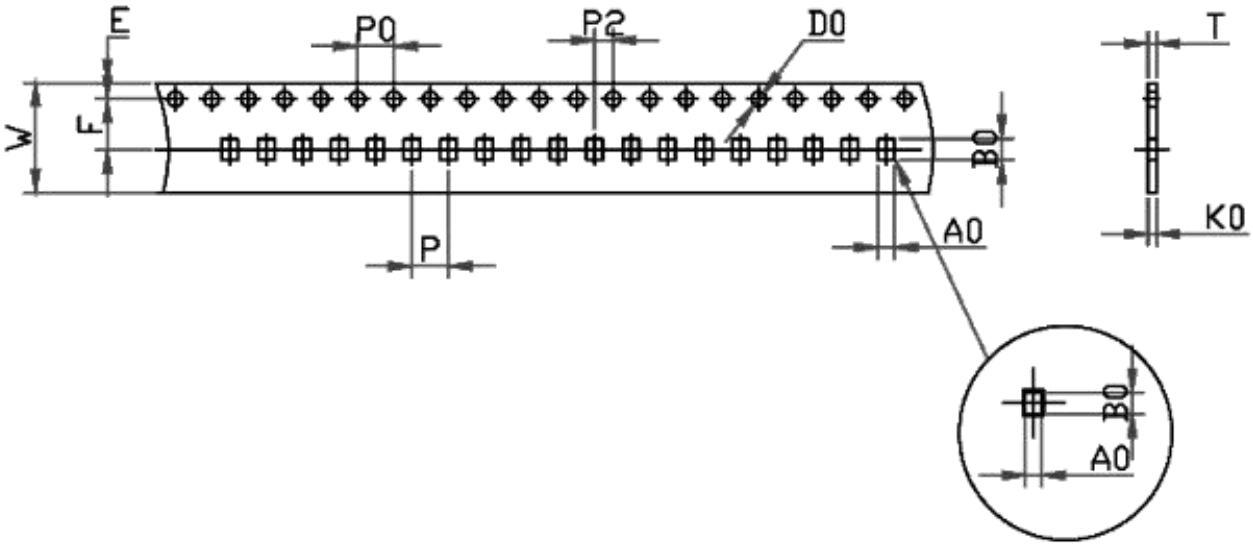

W	A0	B0	K0	P	F	E	D	P0	P2	t	Packaging quantity
8.0 ±0.1	1.05 ±0.05	1.85 ±0.05	0.95 ±0.1	4.0 ±0.05	3.5 ±0.1	1.75 ±0.1	1.5+ 0.1/-0.0	4.0 ±0.1	2.0 ±0.1	0.95 ±0.05	4000PCS/REEL