Features

- Average Forward Current:$I_{F(AV)}$=5A
- Polarity: Color band denotes cathode



SMAF



Package Marking and Ordering Information

Product ID	Pack	Marking	Qty(PCS)
SK54AFL	SMAF	SS54F	3000

Maximum Ratings (Ta=25°C unless otherwise noted)

Item	Symbol	Test Conditions	Limit	Unit
Repetitive Peak Reverse Voltage	V_{RRM}		40	V
Maximum RMS Voltage	V_{RMS}		28	V
Average Forward Current	$I_{F(AV)}$	60Hz Half-sine wave, Resistance load, FIG.1	5.0	A
Surge(Non-repetitive) Forward Current	I_{FSM}	60Hz Half-sine wave, 1 cycle, Ta=25°C	150	A
Junction Temperature	T_J		-55 ~ +125	°C
Storage Temperature	T_{STG}		-55 ~ +150	°C

Electrical Characteristics (Ta=25°C unless otherwise specified)

Item	Symbol	Test Condition		Limit	Unit
Peak Forward Voltage	V_F	I_F=5.0A		0.55	V
Peak Reverse Current	I_{RRM1}	$V_{RM}=V_{RRM}$	T_a=25°C	0.5	mA
	I_{RRM2}		T_a=100°C	10	
Thermal Resistance(Typical)	$R_{\theta J-A}$	Between junction and ambient		55	°C/W
	$R_{\theta J-L}$	Between junction and terminal		17	

Notes:
Thermal resistance from junction to ambient and from junction to lead mounted on P.C.B. with 0.2" x 0.2" (5.0 mm x 5.0 mm) copper pad areas

Typical Characteristics

FIG.1: FORWARD CURRENT DERATING CURVE

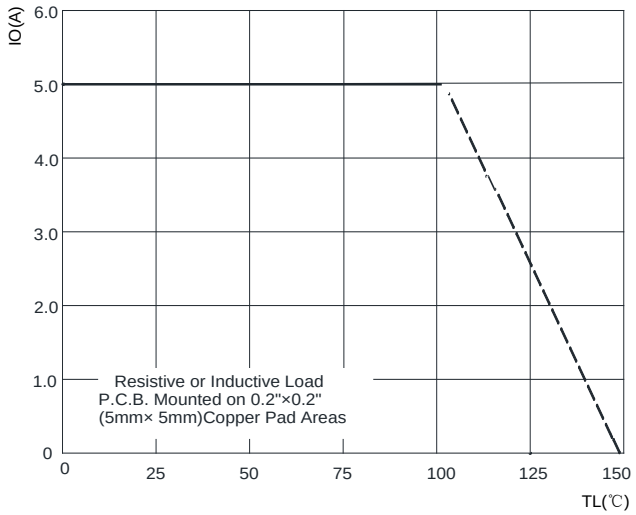

FIG.2: MAXIMUM NON-REPETITIVE FORWARD URGE CURRENT

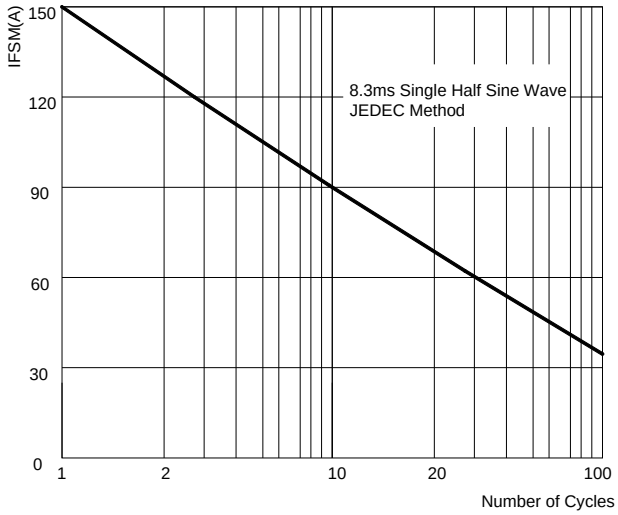

FIG.3: TYPICAL FORWARD CHARACTERISTICS

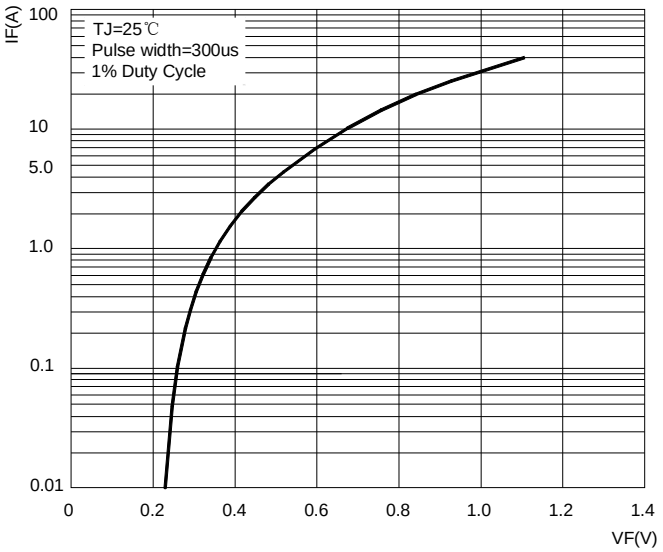

FIG.4：TYPICAL REVERSE CHARACTERISTICS

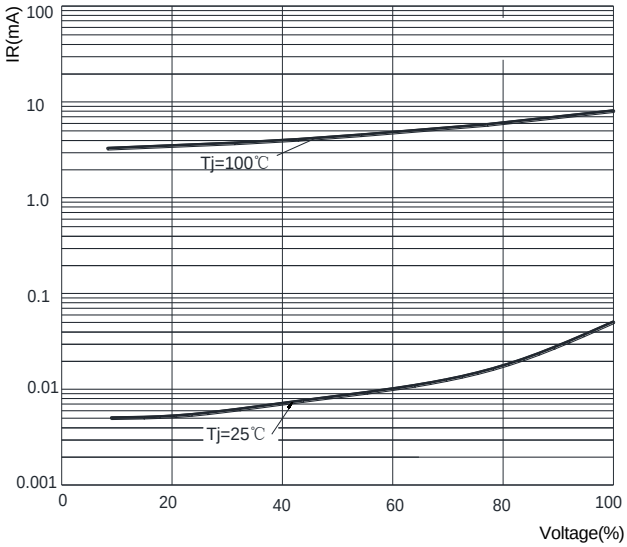

SMAF Package Outline Dimensions

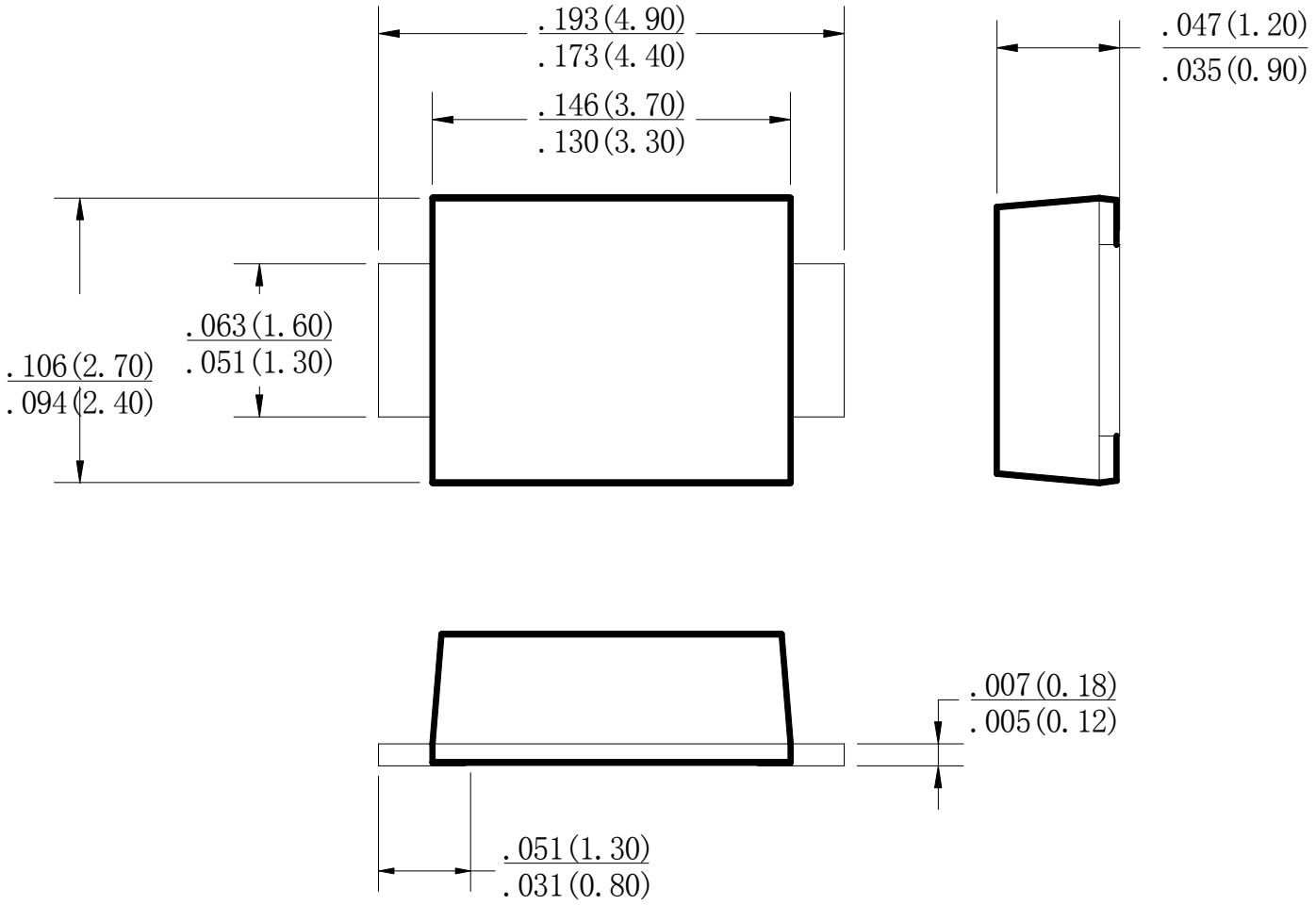

Dimensions in inches and (millimeters)

Attention

■ Any and all HUA XUAN YANG ELECTRONICS products described or contained herein do not have specifications that can handle applications that require extremely high levels of reliability, such as life-support systems, aircraft's control systems, or other applications whose failure can be reasonably expected to result in serious physical and/or material damage. Consult with your HUA XUAN YANG ELECTRONICS representative nearest you before using any HUA XUAN YANG ELECTRONICS products described or contained herein in such applications.

■ HUA XUAN YANG ELECTRONICS assumes no responsibility for equipment failures that result from using products at values that exceed, even momentarily, rated values (such as maximum ratings, operating condition ranges, or other parameters) listed in products specifications of any and all HUA XUAN YANG ELECTRONICS products described or contained herein.

■ Specifications of any and all HUA XUAN YANG ELECTRONICS products described or contained herein stipulate the performance, characteristics, and functions of the described products in the independent state, and are not guarantees of the performance, characteristics, and functions of the described products as mounted in the customer's products or equipment. To verify symptoms and states that cannot be evaluated in an independent device, the customer should always evaluate and test devices mounted in the customer's products or equipment.

■ HUA XUAN YANG ELECTRONICS CO.,LTD. strives to supply high-quality high-reliability products. However, any and all semiconductor products fail with some probability. It is possible that these probabilistic failures could
give rise to accidents or events that could endanger human lives, that could give rise to smoke or fire, or that could cause damage to other property. When designing equipment, adopt safety measures so that these kinds of accidents or events cannot occur. Such measures include but are not limited to protective circuits and error prevention circuits for safe design, redundant design, and structural design.

■ In the event that any or all HUA XUAN YANG ELECTRONICS products(including technical data, services) described or contained herein are controlled under any of applicable local export control laws and regulations, such products must not be exported without obtaining the export license from the authorities concerned in accordance with the above law.

■ No part of this publication may be reproduced or transmitted in any form or by any means, electronic or mechanical, including photocopying and recording, or any information storage or retrieval system, or otherwise, without the prior written permission of HUA XUAN YANG ELECTRONICS CO.,LTD.

■ Information (including circuit diagrams and circuit parameters) herein is for example only ; it is not guaranteed for volume production. HUA XUAN YANG ELECTRONICS believes information herein is accurate and reliable, but no guarantees are made or implied regarding its use or any infringements of intellectual property rights or other rights of third parties.

■ Any and all information described or contained herein are subject to change without notice due to product/technology improvement, etc. When designing equipment, refer to the "Delivery Specification" for the HUA XUAN YANG ELECTRONICS product that you intend to use.

Unikeyic Electronics

Global Electronic Components Distributor

Click to view pricing, inventory, delivery, and lifecycle information:

HXY MOSFET:

ESD5L5.0C-HXY ESD5LM5.0C-HXY HESD36VD3B HPTVSUC3D5VB PESDNC2XD5VBL PJEC5V0M1FN2 BV05C-H HAZ4007-01H HLY323BC1524L AQ15C-01FTG HSEN2411D3 PESDNC2XD5VBF PJSD24CW_R1 TPSMB100CA-VR HACPDQC5V0-HF HSG3D15B3.3MA HSTS521050B331 TPSMB28A-VR HRCLAMP3371ZCTFT 60N06 HESDSLC3V3D3B HSEN3611D3 LM393DR-HXY PESDLC2FD3V3BH AZ4836-01L RLSD32A121V AZ4007-01H HCEZ36V,L3F HSD15C.TCT PESDSC2FD5VU