182.72.104.66RNA69Nadellager

Needle roller bearings RNA6904-XL (Series RNA69)

dimension series 69

The datasheet is only an overview of dimensions and basic load ratings of the selected product. Please always observe all the guidelines in these overview pages. Further information is given on many products under the menu item "Description". You can also order comprehensive information via the Catalogue ordering system (https://www.schaeffler.de/content.schaeffler.de/en/news_media/index.jsp) or by telephone on +49 (91 32) 82 - 28 97.

F_w	25	mm	
D	37	mm	
C	30	mm	
r_{min}	0,3	mm	
m	100	g	Mass
C_r	40500	N	Basic dynamic load rating, radial
C_{0r}	51000	N	Basic static load rating, radial
C_{ur}	9100	N	Fatigue limit load, radial
n_G	16900	1/min	Limiting speed
n_B	9500	1/min	Reference speed

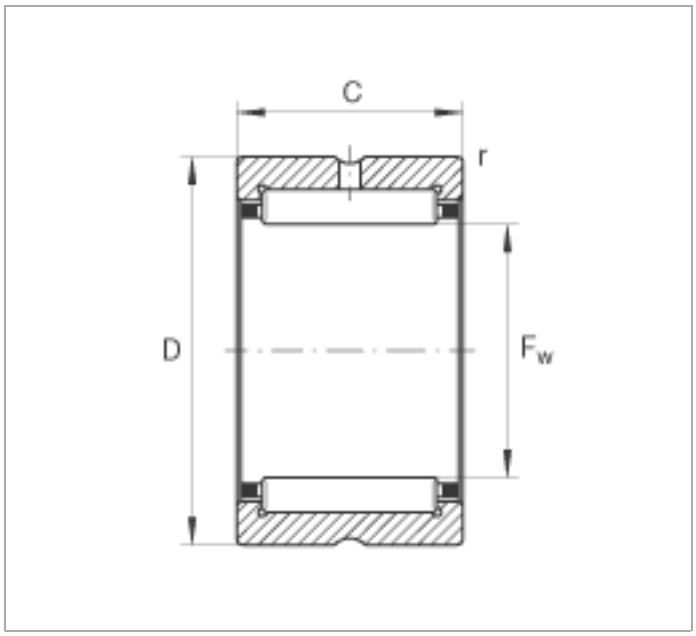
C
r
D
F_w

Unikeyic Electronics

Global Electronic Components Distributor

Click to view pricing, inventory, delivery, and lifecycle information:

INA:

KB16-PP-AS KB40-PP-AS KH10PP KR5207-2RS GE50-UK-2RS-A NA2200-2RSR NKIB5902-XL NUKR35-X-A TME50-XL-N IR7X10X12-XL NKIA59/22-XL IR17X22X14-IS1-OF-XL KWVE25-B-V2-G3 NA4907-2RSR-XL PNA20/42-XL GE40-FO-2RS GE50-DO-2RS GE6-UK HK20202RSL271 PCJT40-XL-N LR203-X-2RSR NKXR30-XL RAE30-XL-NPP-FA106 GE35-DO-2RS KH06-PP KRE52-PP-A NATV15-PP-A RCJY40-XL-N GE40-UK-2RS-A RME60-XL-N#N1>1