MAPX	MODIFICATION	DATE

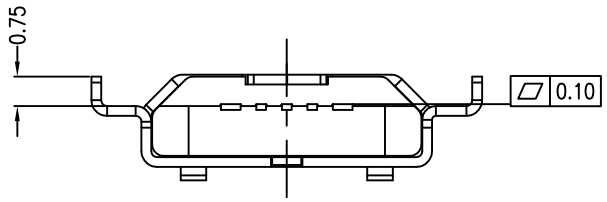

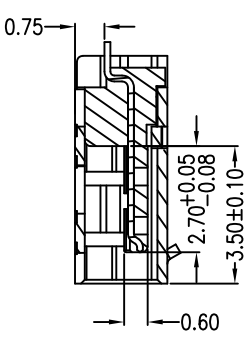

SEC A-A

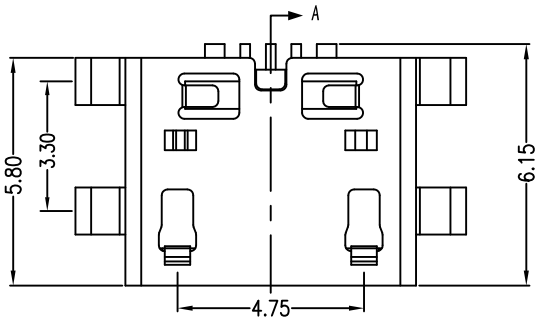

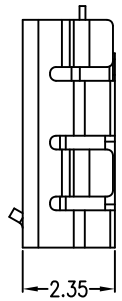

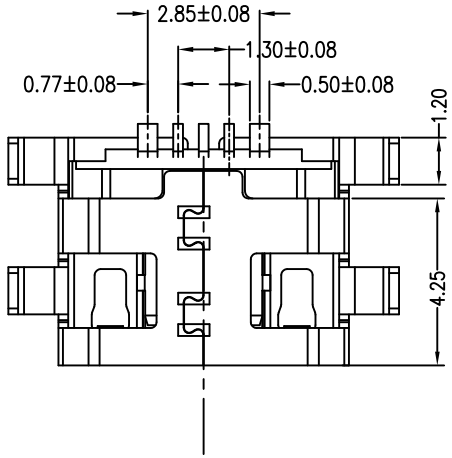

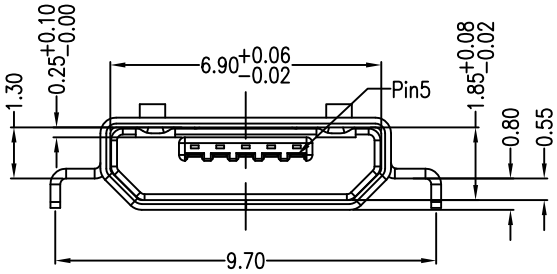

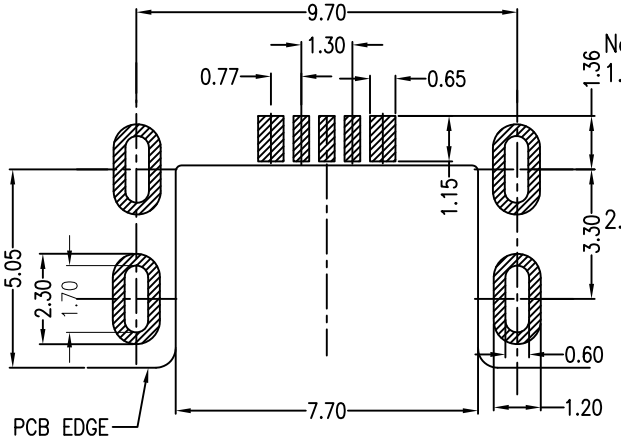

RECOMMANDED PCB LAYOUT

PCB图仅供参考

Note:

1.Material:

1.1 Housing: High temperature thermoplastic with g.f,UL94v-0

1.2 Contact: copper alloy,t=0.15mm

1.3 Shell: SUS,t=0.25mm

2.Specification:

2.1 Current rating:1,5PIN 3A Max/2,3,4PIN 1A Max.

2.2 Dielectric withstanding voltage: 100 V(ac) for 1 min.

2.3 Contact resistance: 30 mΩ Max.

2.4 Insulation resistance: 100 MΩ Min.

2.5 Total mating force: 3.57 Kgf Max.

2.6 Total unmating force: 1.0 Kgf Min.

2.7 Temperature range: -30°C~80°C

A 01 S B X X X X X XX-670

① ② ③ ④ ⑤ ⑥ ⑦ ⑧ ⑨ ⑩ ⑪

⑤ 外壳材质 1:C2680R-H 7:SUS304R-1/2H

⑥ 外壳电镀 1:N50u'' 2:雾T50u'' 3:N+Au1u''(脚) 4:Au1u''

⑦ 端子材质 4:C5191R-EH

⑧ 主体材质 1:LCP

⑨ 主体颜色 B:黑色

⑩ 端子电镀 01:Au1u'';02:Au1.5u'';03:Au3u'' 05:Au5u'' ;10:Au10u'';15:Au15u'';30:Au30u''

产品图 PRODUCT CHART DWG				深圳市精拓金电子有限公司						
公差一览表 TOLERANCE UNLESS OTHERWISE				单位 UNITS	MM	制图 DRAWING	尹先华	制图料号 PRODUCT PART NO.	920-F62A2021S10104	
X.	±0.30	X.	±5.°	比例 SCALE	1:1	审核 CHKD	郭治富	产品名称 PRODUCT NO.	MICRO 5S F B型沉板0.8四脚全插无导位无孔双卡点1.5Pin加宽	
.X	±0.25	.X	±2.°	日期 DATE	2021-04-16	核准 APPD	黄国荣	角法 VIEW		版本 VER A0
.XX	±0.15	.XX	±1.°							
.XXX	±0.10	.XXX	±0.5°							

Unikeyic Electronics

Global Electronic Components Distributor

Click to view pricing, inventory, delivery, and lifecycle information:

Jing extension:

906-752B1114D10200 908-351A1011D10100 918-468K2029Y50000 920-A62A2021S10104
904-232A2031S10100 904-331B2032S10200 905-761A2032S10200 911-221A2021S10100
912-112A1011D10100 912-312A1012D10100 917-B88C201AH70201 920-C52A2021S10105
920-F52A2021S10105 906-262A1021D10200 920-154A2021Y10110 920-A62A2021S10108
918-418K2022Y40011 904-232B2032S10100 907-111A1022D10200 916-151A1022Y10200
918-318K2023C40005 906-552A1012D10200 910-151A2021D10100 912-112A2021S10100
917-P81A202ES60201 918-415K3028S40000 919-162A1012D10400 907-312A1101Y10210
920-A64A2091S101A3 920-C62A2021S10103