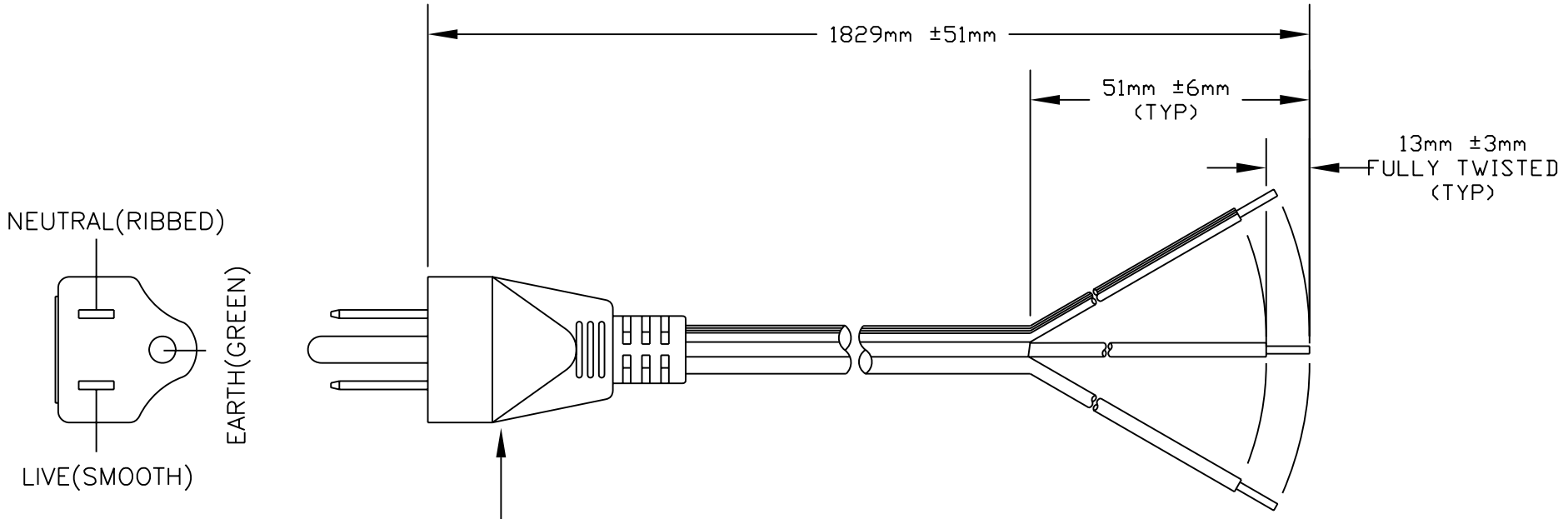

VOLEX RESERVES THE RIGHT TO ALTER NON-CRITICAL DIMENSIONS WITHOUT NOTICE.

PACKAGING: FOLD & TIE

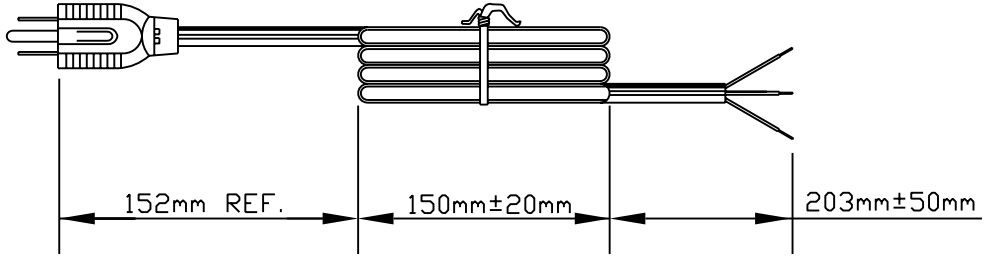

NOTES

1) CORDAGE: 18/3 SPT-2, 60°C, BLACK, (LEAD FREE)
2) APPROVALS: UL
3) RATING: 10 AMP/125 VOLTS
4) FLAME RATING : FT2
5) PACKAGING: 140 PIECES/CARTON

REV	DESCRIPTION	DATE
1	C.U.D - NEW RELEASE	06/18/07

Volex
CUD
FORM IN71-07 REV.A

Indianapolis, IN
☐ Conover, N.C.
☐ Freemont, CA
☐ Aguascalientes, MX
☐ Tijuana, Mexico
☐ Hermosillo, MX
☐ Clinton, AR
☐ Kanata, Canada

Proprietary Notice:

This document is the property of Volex Incorporated. The information contained herein is not to be disclosed to anyone without the express written consent of Volex Inc.

PLUG: PVC, BLACK
JACKET: PVC, BLACK. LEAD FREE

FINISH:

SCALE: NOT TO SCALE
ECO: N/A

TOLERANCE UNLESS OTHERWISE SPECIFIED
.XXX ± .005
.XX ± .02
.X ± .03
FRACT. ± 1/32
ANGULAR ± 1/2°

ITEM DESCRIPTION
CORDSET - NORTH AMERICAN POWER SUPPLY CORD (6')

APPROVED	DRAWN BY	DATE:
STC	STC	06/18/07

PART NO.
17504A 10 B1

Unikeyic Electronics

Global Electronic Components Distributor

Click to view pricing, inventory, delivery, and lifecycle information:

Volex:

17000A 10 B1 17239 8 B1 17505 17515 17566 2125H 17035 17521 10 B1 17512 10 B1 2106H 10 C3 17308 10 B1 NEUSA7SW20G 17038A 10 C3 17272A 10 B1 17406 10 B1 17508 10 B1 17606 10 B1 17501 10 B1 17519 10 B1 17524 10 B1 NGBSC3SW10B 17605 10 B1 2172H 6485 7415 NEUSA7RW10G VL-0124-02-300 17503 10 B1 IN-VAC14KS-001 NEUSD3SW10G