SPECIFICATION

FOR

EUROPEAN JUMPER CORDSET (PB FR)

CORD : H05VV-F 3X1.00mm² PVC LEAD FREE

CUSTOMER : VPE/FARNELL

CUSTOMER'S PART No. : 2467624

VOLEX'S SPEC. REF. No. : 152129

ISSUE No. : 001

DATE : 29TH JANUARY 2015

CUSTOMER APPROVED :

APPROVED BY :	
SIGNATURE :	
APPROVED DATE :	
No. OF PAGES :	

Volex (Asia) Pte Ltd
35 Tampines St. 92
Singapore 528880
Tel : (65) 6788 7833
Fax : (65) 6788 7822

AMENDMENT RECORD

REF. No.	DESCRIPTION OF CHANGES	DATE
152129	(1) FIRST SUBMISSION.	29/01/15
(HG01-234-15)		
ISSUE : 001		

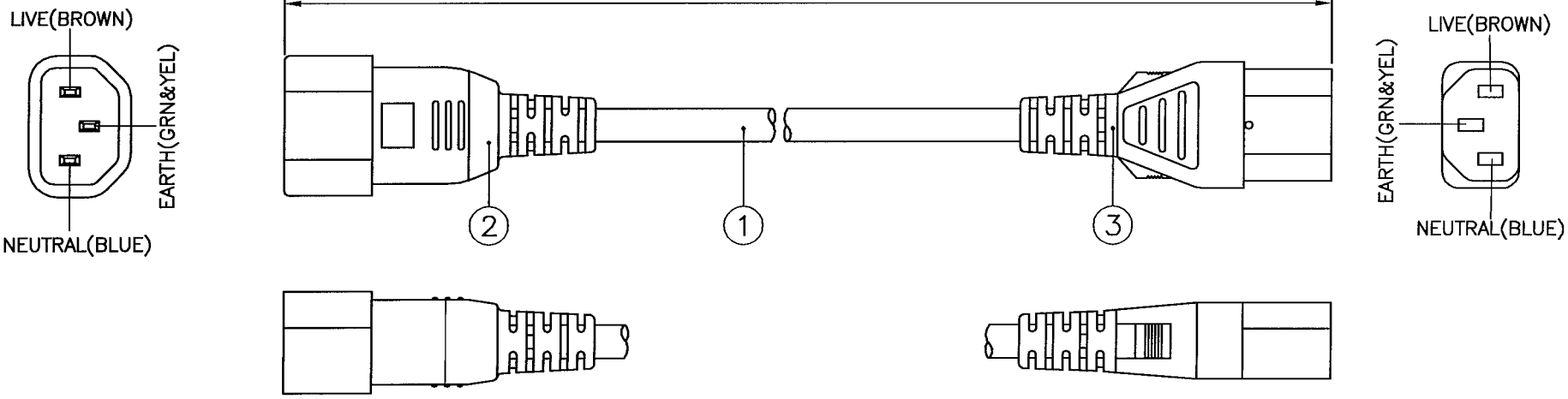

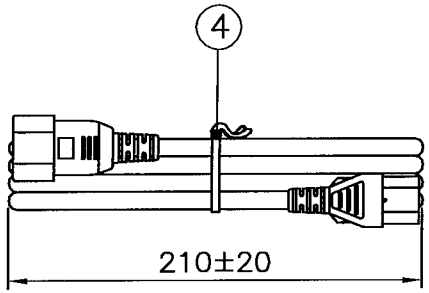

APPROVED SOURCE FOR CABLE

1. BAO HING(SHENZHEN).

NOTE :

1. ALL DIMENSIONS IN mm.
2. THE CORD SHALL COMPLY WITH EN 50525-2-11.
3. THE MOLDED PLUG CONNECTOR SHALL COMPLY WITH IEC 60320-2-2/EN 60320-2-2 & IEC 60320-1/EN 60320-1.
4. THE MOLDED CONNECTOR SHALL COMPLY WITH IEC 60320-1 OR EN 60320-1.
5. THIS PART CAN BE MANUFACTURED AT ANY LOCATION WHICH HAS SAFETY APPROVAL.

S/N	DESCRIPTION	ITEM NUMBER	QTY
4	8" PE TIE BLK	6310062	1
	IP60G NL7976B BLK	4100115	–
3	MOLDED CONNECTOR V1625 (10A 250V)	V1625	1
	IP60G NL7976B BLK	4100115	–
2	MOLDED PLUG VAC14S (10A 250V)	VAC14S-BK	1
1	H05VV-F 3X1.00 BLK PVC LEAD FREE	1210365	1

TITLE : EUROPEAN JUMPER CORDSET (PB FR)					SCALE : N.T.S.
CUSTOMER : VPE/FARNELL					PAGE : 1/1
CUSTOMER PART NUMBER : 2467624					ISSUE
Reference Number : 152129 (HG01-234-15)					001
SALES :	QA :	ENGRG :	CHECKED BY :	DRAWN BY : TIAN SHUO	Volex (Asia) Pte Ltd
Date :	Date :	Date : 20/01/15	Date : 30/01/15	Date : 29/01/15	Confidential property of Volex. Information contained herein shall not be disclosed to others, reproduced or used for any other purposes except as authorized in writing by an authorized official of volex asia.

REV.	DESCRIPTION	DATE
I	REMOVE INSULATION COLOR 'BLUE, BROWN, BLACK' FM. REV. H PER HD STANDARD.	01/09/06
J	CHANGE THE COMPLIANCE STANDARD PER SAFETY. UPDATE FORMAT AS SHOWN.	23/12/13

1. PVC FLEXIBLE CORD

1.1 SCOPE

This specification shall be in accordance with EN 50525-2-11. ⚠

1.2 CONSTRUCTION

CONDUCTOR	ANNEALED COPPER WIRE
INSULATION	PVC (BLUE, BROWN, GREEN&YELLOW)
JACKET	PVC

ITEM		UNIT	SPEC. VALUE
TEMPERATURE RATING		°C	70
RATED VOLTAGE		V	300/500
NO. OF CORE		NO.	3
CONDUCTOR NOMINAL AREA		mm^2	1.00
MIN. AVE. THICKNESS OF INSULATION		mm	0.60
MIN. THICKNESS AT ANY POINT OF INSULATION		mm	0.44
MIN. AVE. THICKNESS OF JACKET		mm	0.80
MIN. THICKNESS AT ANY POINT OF JACKET		mm	0.58
OVERALL DIAMETER OF JACKET		mm	6.3~8.0
DIELECTRIC-STRENGTH TEST IMMERSED IN WATER, 20±5°C FOR MINIMUM 1HR	ON COMPLETED CABLE	–	2000 V FOR 15 MINS (MINIMUM)
	ON CORES	–	1500 V FOR 5 MINS (MINIMUM)
VOLTAGE TEST (D.C)		–	2000 Va.c FOR 5 MINS (MINIMUM) OR 5000 Vd.c FOR 5 MINS (MINIMUM)
INSULATION RESISTANCE TEST (70°C)		MΩ km	> 0.01
CONDUCTOR RESISTANCE TEST (20°C)		Ω /km	<= 19.5

TITLE : CABLE SPECIFICATION
EUROPEAN APPROVED POWER SUPPLY CABLE
H05VV-F 3X1.00mm²

SPEC NO. :	APPROVED BY :	CHECKED BY :	DRAWN BY :	REVISION :	⚠ Volex (Asia) Pte Ltd
CS-048EU		hongyan	HONGYAN	J	
	DATE : 30/12/13	DATE : 27/12/13	DATE : 23/12/13	PAGE : 1/1	

Confidential property of Volex.
Information contained herein shall not be disclosed to others, reproduced or used for any other purposes except as authorized in writing by an authorized official of volex asia.

REV.	DESCRIPTION	DATE
A	INITIAL RELEASE.	12/10/02
B	UPDATE MARKING DETAILS. UPDATE THE FORMAT AS SHOWN. ADD IN '(EU/SAA/SAB/IEC)' ON THE TITLE.	19/01/05

CABLE MARKING

BAO HING (SHENZHEN)

(B) H05VV-F 3G1.0mm² ◁VDE▷ KEMA-KEUR +ᔕ +ᔕ +ᔕ
◁ÖVE▷ CEBEC IEMMEQU SABS 1574 Ⓢ Ⓝ Ⓓ Ⓕ
BAOHING GTSA-3 N14586 CE LF

DRAWN	LI XF	19/01/05	FILENAME : CABLE MARKING/ BH/H05/H05W-F 3X1.0 LF- BH
CHECK		19/1/05	
APPR		19/01/05	
SCALE	N.T.S.	REV.	B

TITLE :
CABLE MARKING
(EU/SAA/SAB/IEC) (B)

REFERENCE :
H05VV-F 3X1.0mm² LF

Volex (Asia) Pte Ltd

Confidential property of Volex.
Information contained herein shall not be disclosed to others, reproduced or used for any other purposes except as authorized in writing by an authorized official of volex asia.

REV	DESCRIPTION	DATE
	CHANGE 'TEST RESULT' TO 'ACCEPTANCE CRITERIA'.	
S	CHANGE FORMAT AS SHOWN.	11/03/13
T	ADD IN CATALOGUE NO. 'VAC14LA' .	03/06/13

3. CONNECTOR

3.1. SCOPE

The connector shall be in accordance with IEC 60320-2-2 / EN 60320-2-2 & IEC 60320-1 / EN 60320-1 : Test specification - appliance couplers.

3.2. CONSTRUCTION

The connector construction shall comply with our catalogue No: VAC14S, VAC14A,VAC20S , VAC14LS , VAC14KC , VAC14KAL, VAC14KAR, *VAC14LA* , VAC20KAL, VAC20KAR & VAC20KC.

"All Connectors complying to Standard Sheet C14 and C20"

3.3. CHARACTERISTICS

NO.	TEST ITEM	DESCRIPTION	ACCEPTANCE CRITERIA
1.	Moisture resistance test	Samples are kept in a humidity cabinet containing air with a relative humidity between 91 to 95% and a temperature of 20°C-30°C for a duration of 48 hours.	No damage
2.	Electric strength test	Voltages of 3000V±60V and 1500V±60V, with min. trip current of 100mA is applied for 60s±5s between current-carrying contacts and body and between each contacts respectively after the moisture resistance tests.	No flashover and breakdown
3.	Insulation resistance test	This test is measured with a D.C 500V after the moisture resistance test.Readings are taken after 60s ± 5s of application of voltage.	Min. 5 M Ohm
4.	Glow wire test	Glow wire is applied for 30s with temperature of 750°C on inserts and housings retaining contacts and 650°C on elsewhere.	Flame (if any) shall be self-extinguished within 30s . upon the removal of the glow wire and molten droplets shall not ignite paper.

DRAWN:	XIAOZHI	03/06/13	TITLE : EUROPEAN & BRITISH PLUG CONNECTOR
CHECK:	[signature]	03/06/13	
APPR:	[signature]	3/6/13	
REV:	T		
REFERENCE:			Volex (Asia) Pte Ltd

Confidential property of Volex.
Information contained herein shall not be disclosed to others, reproduced or used for any other purposes except as authorized in writing by an authorized official of volex asia.

NO.	TEST ITEM	DESCRIPTION	ACCEPTANCE CRITERIA
5.	Bending test	The sample shall be loaded with a weight of 10N for 0.75mm^2 or 20N for 1.00mm^2 or bigger and the oscillating member shall be moved backward and forward through an angle of 90°(45° on either side of the vertical) the number of flexing being 20,000.A rated current is applied. For round cord, the sample is turned 90 degree around the axis of cable after 10,000 cycles. The flexing is further completed in this axis. Flat cable is flexed only along the bigger axis of the cable.	There shall be no complete breakage of any of the conductor. Broken conductor shall not have pierced the insulation.
6.	Tumbling test	The sample is dropped from a height of 50cm onto a steel plate(3mm thick) for a total of 500 times.	No damage to impair further use of connector.
7.	Temperature rise test	An alternating current at 1.25 times rated current is passed through the current carrying contacts for 1 hour.This is repeated for connector with earth contact passing current between earth and each of the current carrying contacts.	The temperature rise shall not exceed 45K.
8.	Cord-anchorage test	The cord is subjected to pulls of 50N(2.5A) or 60N(others) for 100 times each time for 1 sec. without jerk.Thereafter the cord is subjected for 1 min. to a torque of 0.15Nm(0.75mm^2) or 0.25Nm(others).	The cord shall not be damaged and shall not been displaced by more than 2mm.
9.	Heat deformation test	Samples are kept for 1 hour in a heating cabinet at temperature of 100±2°C.	No damage to impair further use of connector.
10.	Heat pressure test	A pressure of 20N is applied at a temperature of 100°C ± 2°C for 1 hour.	No damage to impair further use of connector.
11.	Aging test	The samples are kept for 168 hours in a heating cabinet at a temperature of 80±2°C.	No damage & marking shall be legible.
12.	Ball pressure test	A ball of 5mm in diameter is applied on the connector with the following temperature with 20N force for 1 hour. i) 125°C for hot connectors. ii) 125°C for parts retaining current carrying parts and earth circuit. iii) 75°C for other parts for cold connector. The connector is then cooled down to room temperature with cold water.	The diameter of the impression shall not exceed 2mm.

DRAWN:	XIAOZHI	03/06/13	TITLE : EUROPEAN & BRITISH PLUG CONNECTOR
CHECK:		03/06/13	
APPR:		3/6/13	
REV:	T		
REFERENCE:			Volex (Asia) Pte Ltd

Confidential property of Volex.
Information contained herein shall not be disclosed to others, reproduced or used for any other purposes except as authorized in writing by an authorized official of volex asia.

REV	DESCRIPTION	DATE
	CHANGE 'TEST RESULT' TO 'ACCEPTANCE CRITERIA'	
AP	CHANGE FORMAT AS SHOWN.	11/03/14
AQ	ADD IN CATALOGUE NO. VAC17KS.	24/02/14

3. CONNECTOR

3.1. SCOPE

The connector shall be in accordance with IEC 60320-1 or EN 60320-1, Test specification - appliance couplers.

3.2. CONSTRUCTION

The connector construction shall comply with our catalogue No: VAC5S, APC5A, APC5S, APC5M, VAC5AR, APC5SM, DLC5A3, V1625, V1625A, VAC19, VAC17S, VSCC13, AVLC13, APC13, APC13S, VSC19, V1625LA, VAC19A, VSCC15, APC5SP, APC13F, V1625BS, APC13G, VAC13A, VAC13S, PIC17S, VIC13A, DLC5U3, VAC13KS,SOC5S, V1625H, VAC19KS, DLC5E3, HPC13A, V1625AT, VAC17A, APC5SF, VCC13, VCC5S, APC13H, VCC17S, VAC19H, APC13FH, APC13HC & *VAC17KS* "All connectors complying to Standard Sheet C5, C13, C15, C15A, C17 and C19"

3.3. CHARACTERISTICS

NO.	TEST ITEM	DESCRIPTION	ACCEPTANCE CRITERIA
1.	Moisture resistance test	Samples are kept in a humidity cabinet containing air with a relative humidity between 91 to 95% and a temperature of 20°C-30°C for a duration of 48 hours.	No damage
2.	Electric strength test	Voltages of 3000V±60V and 1500V±60V, with min. trip current of 100mA is applied for 60s±5s between current-carrying contacts and body and between each contacts respectively after the moisture resistance tests.	No flashover and breakdown
3.	Insulation resistance test	This test is measured with a D.C 500V after the moisture resistance test.Readings are taken after 60s ± 5s of application of voltage.	Min. 5 M Ohm
4.	Withdrawal force test	i) Min. 1.5N (2N for 16A) - A single pin made to the minimum dimension is inserted into the connector. The pin, together with the weight should exert a force of 1.5N (2N for 16A connector). Each individual pole of the connector is tested seperately. ii) Max. 50N (60N for 16A) - Insert and withdraw the connector from a socket having pin dimension to the maximum and shroud dimension to the minimum for 10 times.The connector is then inserted again into the socket hang with a total weight of 50N(60N for 16A).The weight consist of a principal weight which is 90% of the total weight and a supplementary weight of 10%. The test is repeated for hot connector with temperature of 120°C±2°C on the pins.	i) The pin with the weight should not be withdrawn from the connector for more than 3 seconds. ii) The connector shall be withdrawn from the socket. If not the supplementary weight is lifted from a height of 5cm and drop. The connector must be withdrawn. The test is repeated after temperature rise test.

DRAWN:	MOLLY	24/02/14	TITLE: EUROPEAN & BRITISH APPLIANCE COUPLERS
CHECK:		26/02/14	
APPR:		24/2/14	
REV:	AQ		
REFERENCE:			Volex (Asia) Pte Ltd

Confidential property of Volex.
Information contained herein shall not be disclosed to others, reproduced or used for any other purposes except as authorized in writing by an authorized official of volex asia.

NO.	TEST ITEM	DESCRIPTION	ACCEPTANCE CRITERIA
5.	Glow wire test	Glow wire is applied for 30s with temperature of 750°C on inserts and housings retaining contacts and 650°C on elsewhere.	Flame (if any) shall be self-extinguished within 30s . upon the removal of the glow wire and molten droplets shall not ignite paper.
6.	Bending test	The sample shall be loaded with a weight of 10N for 0.75mm^2 or 20N for 1.00mm^2 or bigger and the oscillating member shall be moved backward and forward through an angle of 90°(45° on either side of the vertical) the number of flexing being 20,000.A rated current is applied. For round cord, the sample is turned 90 degree around the axis of cable after 10,000 cycles. The flexing is further completed in this axis. Flat cable is flexed only along the bigger axis of the cable.	There shall be no complete breakage of any of the conductor. Broken conductor shall not have pierced the insulation.
7.	Tumbling test	The sample is dropped from a height of 50cm onto a steel plate(3mm thick) for a total of 500 times.	No damage to impair further use of connector.
8.	Breaking capacity test	The connector is connected and disconnected 50 times (100 strokes) with the inlet at a rate of 30 strokes per minute with 275V and 1.25 times of rated current.	No flashover or sustained arcing during the test and no damage to impair further use of connector.
9.	Normal operation test	Test is similar to breaking capacity except that the test voltage is 250V with the connector connnected and disconnected with the inlet for 1000 times (2000 strokes) with rated current and 3000 times (6000 strokes) without current.	Withstand electric strength at 1500V for 1 min, and show no damage.
10.	Temperature rise test	An alternating current at 1.25 times rated current is passed through the current carrying contacts for 1 hour.This is repeated for connector with earth contact passing current between earth and each of the current carrying contacts.	The temperature rise shall not exceed 45K.
11.	Cord-anchorage test	The cord is subjected to pulls of 50N(2.5A) or 60N(others) for 100 times each time for 1 sec. without jerk.Thereafter the cord is subjected for 1 min. to a torque of 0.15Nm(0.75mm^2) or 0.25Nm(others).	The cord shall not be damaged and shall not been displaced by more than 2mm.
12.	Heat deformation test	Samples are kept for 1 hour in a heating cabinet at temperature of 100±2°C.	No damage to impair further use of connector.
13.	Heat pressure test	A pressure of 20N is applied at a temperature of 100°C ± 2°C for 1 hour.	No damage to impair further use of connector.

DRAWN:	MOLLY	24/02/14	TITLE: EUROPEAN & BRITISH APPLIANCE COUPLERS
CHECK:		24/02/14	
APPR:		24/2/14	
REV:	AQ		
REFERENCE:			Volex (Asia) Pte Ltd

Confidential property of Volex.
Information contained herein shall not be disclosed to others, reproduced or used for any other purposes except as authorized in writing by an authorized official of volex asia.

NO.	TEST ITEM	DESCRIPTION	ACCEPTANCE CRITERIA
14.	Aging test	The samples are kept for 168 hours in a heating cabinet at a temperature of 80±2°C.	No damage & marking shall be legible.
15.	Ball pressure test	A ball of 5mm in diameter is applied on the connector with the following temperature with 20N force for 1 hour. i) 125°C for hot connectors. ii) 125°C for parts retaining current carrying parts and earth circuit. iii) 75°C for other parts for cold connector. The connector is then cooled down to room temperature with cold water.	The diameter of the impression shall not exceed 2mm.

DRAWN:	MOLLY	24/02/14	TITLE: EUROPEAN & BRITISH APPLIANCE COUPLERS
CHECK:		24/02/14	
APPR:		24/2/14	
REV:	AQ		
REFERENCE:			Volex (Asia) Pte Ltd

Confidential property of Volex.
Information contained herein shall not be disclosed to others, reproduced or used for any other purposes except as authorized in writing by an authorized official of volex asia.

REV.	DESCRIPTION	DATE
G	UPDATE FORMAT AS SHOWN.	03/11/06
	REMOVE THE CLOSED FACTORY FM. MANU. LOC. MARK.	
H	REMOVE THE CLOSED FACTORY FROM MANU. LOCATION MARK.	23/07/09

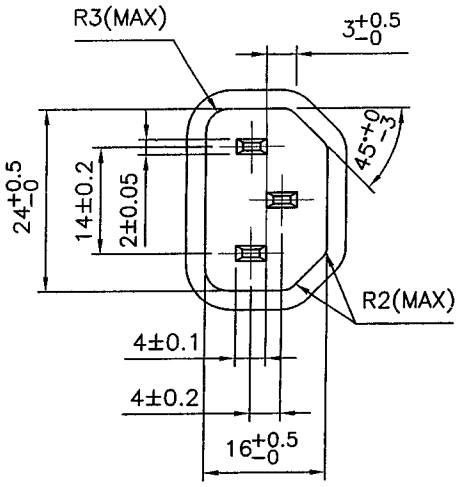

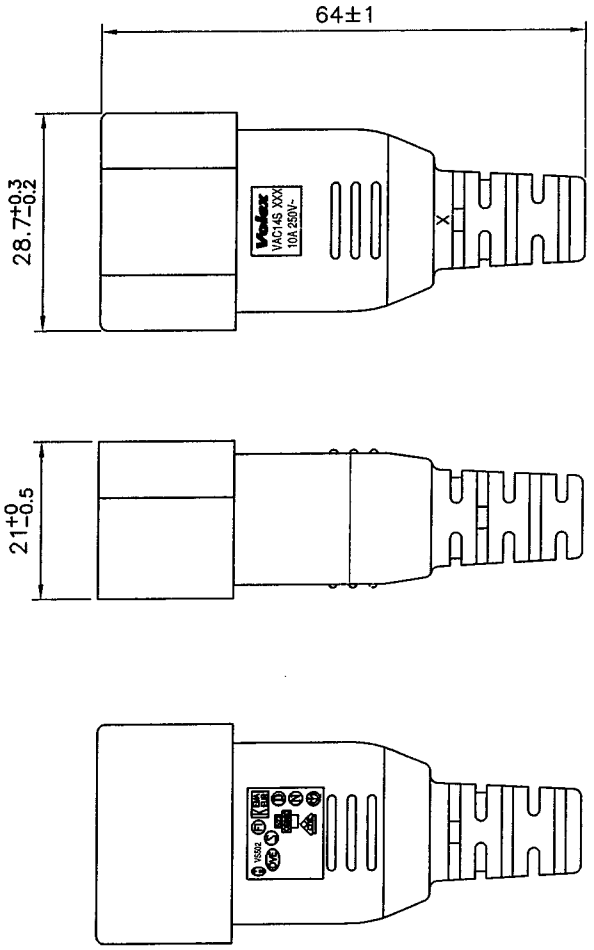

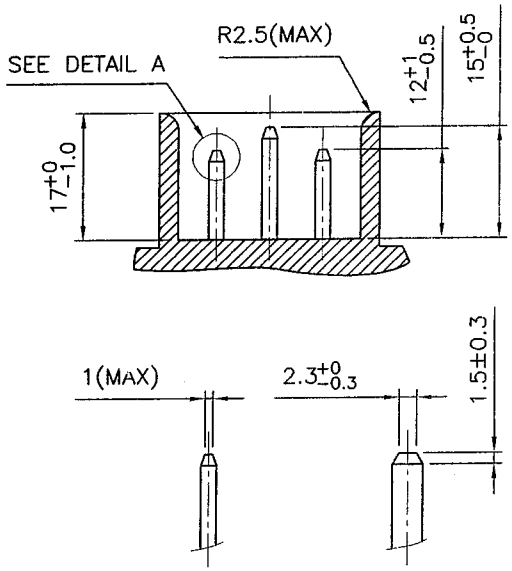

DETAIL A

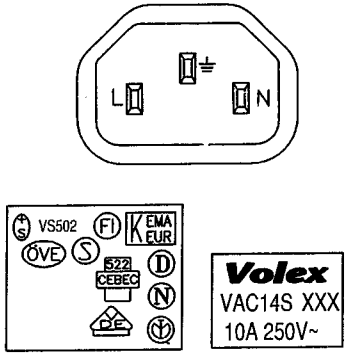

MARKING DETAILS :

NOTES :

1.) ALL DIMENSIONS IN mm.
2.) X – CAVITY NO. (OPTIONAL)
3.) XXX – MANUFACTURING LOCATION.

HG	HENG GANG (CHINA)	X
SM1	ZHONGSHAN (CHINA)	X
VH	HANOI (VIETNAM)	
B	BATAM (INDONESIA)	
VC	CHENNAI (INDIA)	X

MANUFACTURE LOCATION MARK
(' X ' IS APPLICABLE ONLY)

DRAWN	QIAN SM	23/07/09	FILE NAME : A-CONNECTOR/ EURO/GENERAL/ VAC14S-EURO
CHECK	[signature]	27/07/09	
APPR	[signature]	30/7/9	
REV.	H	SCALE	N.T.S.

REFERENCE :

EUROPEAN APPROVAL

TITLE :

MOLDED PLUG CONNECTOR
VAC14S

Volex (Asia) Pte Ltd

Confidential property of Volex.
Information contained herein shall not be disclosed to others, reproduced or used for any other purposes except as authorized in writing by an authorized official of volex asia.

REV.	DESCRIPTION	DATE
J	UPDATE FORMAT AS SHOWN. REMOVE THE CLOSED FACTORY FM. MANU. LOC. MARK.	02/11/06
K	REMOVE THE CLOSED FACTORY FROM MANU. LOCATION MARK.	23/07/09

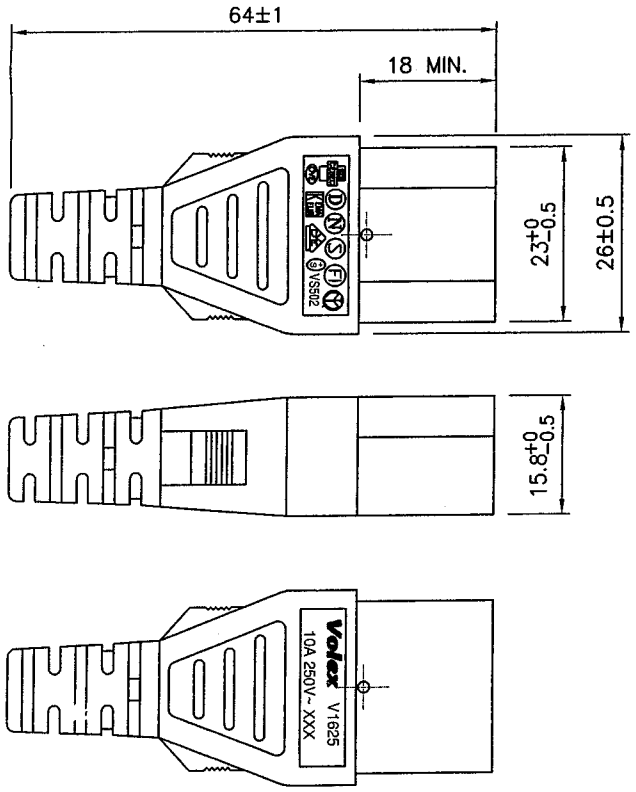

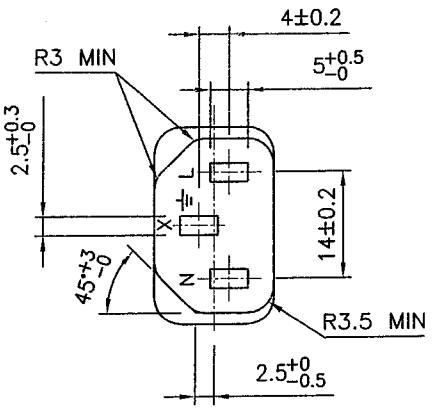

Volex V1625
10A 250V~ XXX

522 CEBEC D N S FI ÖVE KEMA EUR DE +S VS502

MARKING DETAILS

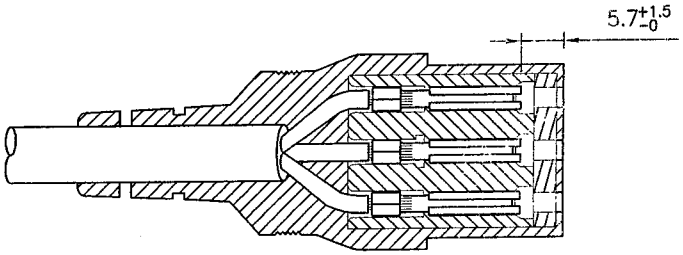

NOTES :

1.) ALL DIMENSIONS IN mm.
2.) X – CAVITY NO. (OPTIONAL)
3.) XXX – MANUFACTURING LOCATION

HG	HENG GANG (CHINA)	X
SM1	ZHONGSHAN (CHINA)	X
VH	HANOI (VIETNAM)	X
B	BATAM (INDONESIA)	X
VC	CHENNAI (INDIA)	X

MANUFACTURE LOCATION MARK
(' X ' IS APPLICABLE ONLY)

DRAWN	QIAN SM	23/07/09	FILE NAME : A CONN/EURO/GENERAL/V1625-EUROPEAN
CHECK		27/07/09	
APPR		30/7/9	
REV.	K	SCALE	N.T.S.

REFERENCE :

EUROPEAN APPROVAL

TITLE :
MOLDED CONNECTOR
V1625

Volex (Asia) Pte Ltd

Confidential property of Volex.
Information contained herein shall not be disclosed to others, reproduced or used for any other purposes except as authorized in writing by an authorized official of volex asia.

Unikeyic Electronics

Global Electronic Components Distributor

Click to view pricing, inventory, delivery, and lifecycle information:

Volex:

2125H 2172H IN-VAC14KS-001 NGBSC3SW10B VL-0124-02-300 17524 10 B1 6485 7415 17512 10 B1 17566 NEUSA7SW20G 17239 8 B1 17503 10 B1 17505 17000A 10 B1 17508 10 B1 17519 10 B1 17605 10 B1 17035 17501 10 B1 17606 10 B1 NEUSD3SW10G NEUSA7RW10G 17515 17038A 10 C3 17272A 10 B1 17308 10 B1 17406 10 B1 17521 10 B1 2106H 10 C3