DRAWING NUMBER:	REVISION:
1103468	I

CABLE CUTTING

CABLE SOURCE :
1. WONDERFUL.
2. BAO HING(SHENZHEN).
3. TONG YUAN(SHENZHEN).
4. TA HSING(SHENZHEN).
5. AWIN.
6. KUPOINT.

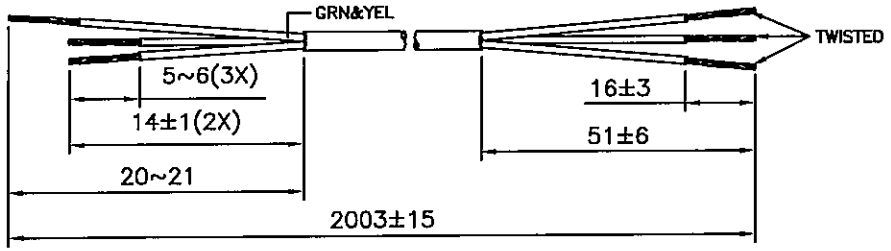

ASSEMBLY :

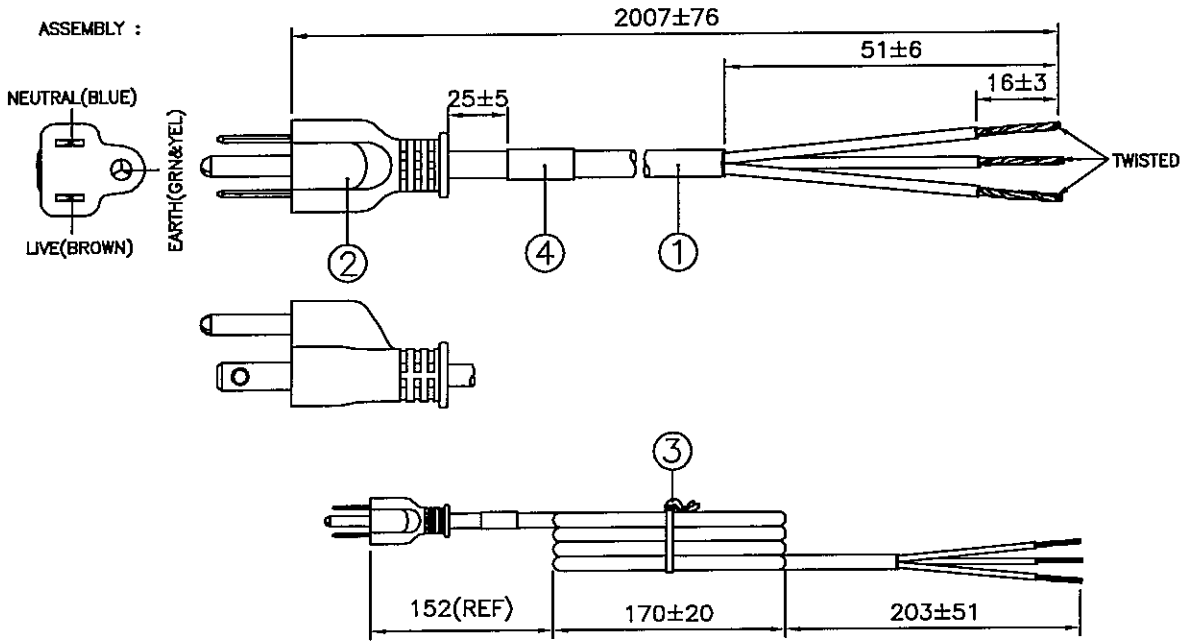

1. ALL DIMENSIONS IN mm.
2. PLUG MARKING : REFER TO MARKING DRAWING NO. : VP-0144D.
3. PLUG DETAILS : REFER TO PRODUCT DRAWING NO. : P-0322.
4. LABEL DETAILS : REFER TO LABEL DRAWING NO. : VL-0234.
5. CARTON BOX MUST HAVE A LABEL/STAMP SAYING : "THIS PACKAGE CONTAINS CORDS HAVING GROUNDING CONDUCTOR WITH GREEN/YELLOW COLOUR INSULATION, NEUTRAL CONDUCTOR WITH BLUE COLOUR INSULATION AND LIVE CONDUCTOR WITH BROWN COLOUR INSULATION ".
6. THIS PART CAN BE MANUFACTURED AT ANY LOCATION WHICH HAS SAFETY APPROVAL.

REV.	ECR REF. NO.	DESCRIPTION	DATE
H	150209	ADD IN CABLE SOURCE 'AWIN & KUPOINT'.	09/05/15
I	150232	CHANGE PLUG MARKING DWG. NO. FM. 'VP-0144' TO 'VP-0144D'.	15/05/15

S/N	DESCRIPTION	ITEM NUMBER	QTY
4	PRINTED LABEL	VL-0234	1
3	6" PE TIE BLK	6310056	1
	IP40G NL792B BLK	4100017	-
2	MOLDED PLUG US15S3 (10A 125V)	US15S3	1
1	SVT 18/3 105°C BBGY BLK PVC LEAD FREE	1810179	2.003M

TITLE :	NORTH-AMERICAN POWER SUPPLY CORD (CS-LF0001)	PAGE : 1/2
CUSTOMER :	VIS/VOLEX INC	HG09-198-05
CUSTOMER PART NUMBER :	17747 1Ø B1	DWG. TYPE
F/G CODE : 17747 1Ø B1	SPEC NO.: ---	OED

SALES :	QA :	ENGRG :	CHECKED BY :	DRAWN BY :	
N.A.	N.A.	Feng	lily	LILY ZHOU	Volex (Asia) Pte Ltd
DATE : N.A.	DATE : N.A.	DATE : 23/05/15	DATE : 25/05/15	DATE : 15/05/15	

Confidential property of Volex. Information contained herein shall not be disclosed to others, reproduced or used for any other purposes except as authorised in writing by an authorised official of Volex Asia.

DRAWING NUMBER :

1103468

PACKAGING INSTRUCTION

1. 2 COMPARTMENTS PER CARTON, 60 PCS PER COMPARTMENT.
2. PLUG'S DIRECTION TO BE IN ALTERNATE ARRANGEMENT WHEN PACKING.
3. PACKAGING : 120 PCS PER CARTON.

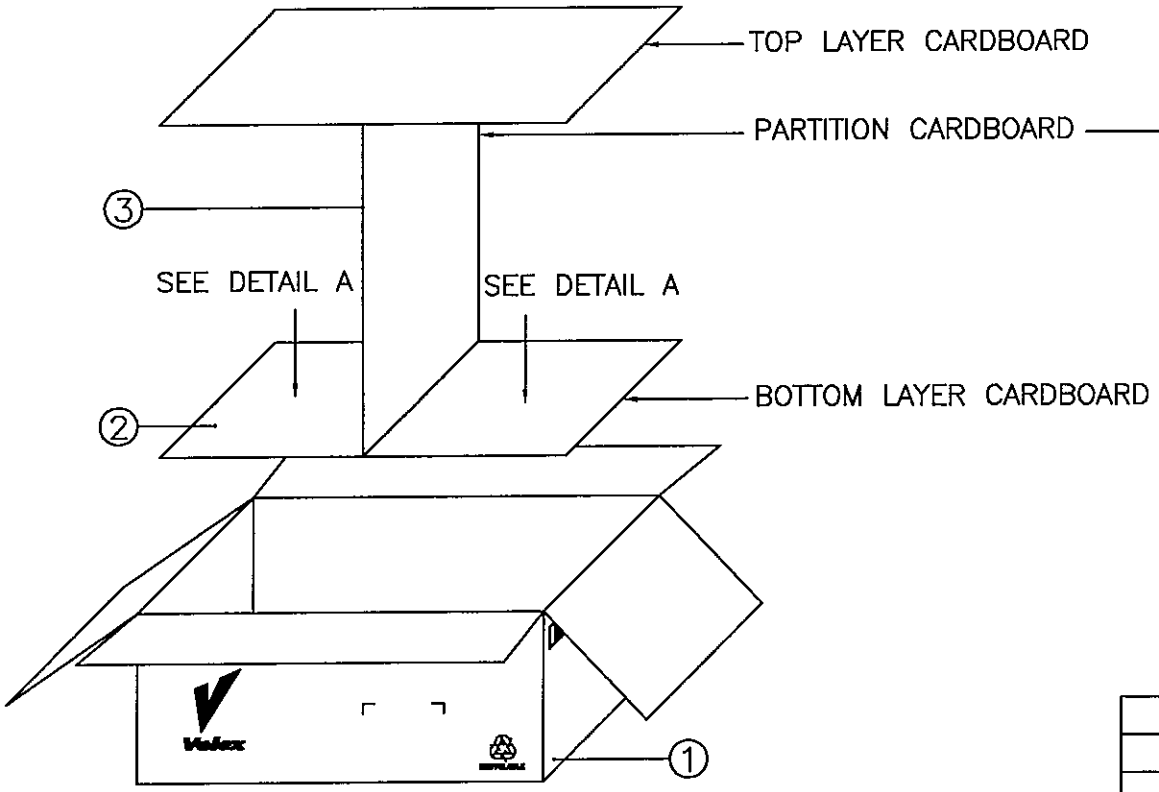

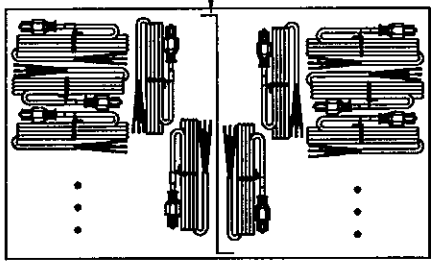

DETAIL A

S/N	DESCRIPTION	ITEM NUMBER	QTY
3	CARTON PAPER 415X245MM	901023	0.0084
2	CARTON PAPER 550X305MM	901024	0.0167
1	LONG CARTON 560X330X250MM	901011	0.0084

REVISION	I	TITLE : PACKAGING SPEC.
PAGE	2/2	
SCALE	N.T.S.	
REFERENCE : DESCRIPTION : CARTON BOX		**Volex (Asia) Pte Ltd**

Confidential property of Volex.
Information contained herein shall not be disclosed to others, reproduced or used for any other purposes except as authorised in writing by an authorised official of Volex Asia.

NOTE :

1.) ALL DIMENSIONS IN mm.

Unikeyic Electronics

Global Electronic Components Distributor

Click to view pricing, inventory, delivery, and lifecycle information:

Volex:

17038A 10 C3 17272A 10 B1 17406 10 B1 17505 6485 IN-VAC14KS-001 17035 17512 10 B1 17521 10 B1 7415 NEUSA7SW20G 17515 17524 10 B1 NEUSD3SW10G 17000A 10 B1 17566 2172H 17508 10 B1 NGBSC3SW10B 17239 8 B1 17308 10 B1 17501 10 B1 17606 10 B1 2125H 17503 10 B1 17605 10 B1 2106H 10 C3 NEUSA7RW10G VL-0124-02-300 17519 10 B1