Quartz Crystal Specification

Part No. + Packaging: ***LFXTAL059461***

Customer Part:

Description

- 2.0 x 1.2mm SMD crystal in a hermetically sealed ceramic package with an electron beam sealed metal lid.
  Suitable for real time clock applications.
- Model IQXC-25
- Model Issue number 3

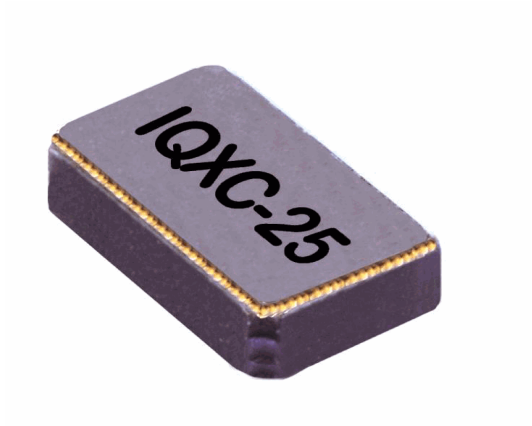

Frequency Parameters

- Frequency 32.7680kHz
- Frequency Tolerance ±20.00ppm
- Tolerance Condition @ 25°C ±5°C
- Operating Temperature Range -40.00 to 85.00°C
- Overtone Order Fundamental
- Ageing ±3ppm max per year @ 25°C
- Frequency Stability Coefficient: -0.03/°C² typ
- Drive Level: 0.1µW±0.01µW recommended, ±0.5µW max
- Motional Capacitance (C1): 7fF typ

Outline (mm)

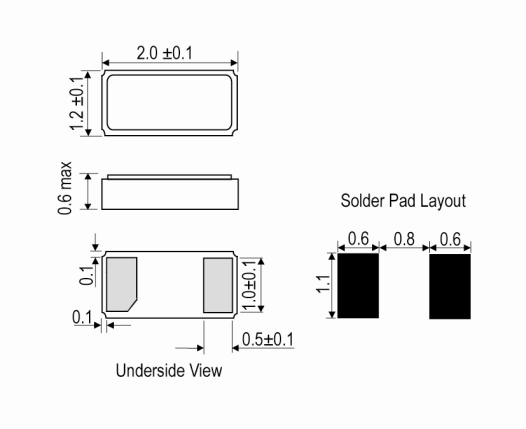

Electrical Parameters

- Load Capacitance (CL) 7.00pF
- Shunt Capacitance (C0) 1.3pF typ, 1.7pF max
- ESR 90.00kΩ max

Environmental Parameters

- Storage Temperature Range: –40 to 85°C
- Shock: IEC 60068-2-27: 1000G, 1ms, 3 times in each of 3 mutually perpendicular planes.
- Vibration: IEC 60068-2-6: 1.5mm amplitude, 10Hz-55Hz, 1min in 3 mutually perpendicular planes, duration 2hrs each plane (total 6hrs).

Typical Frequency Stability Characteristics

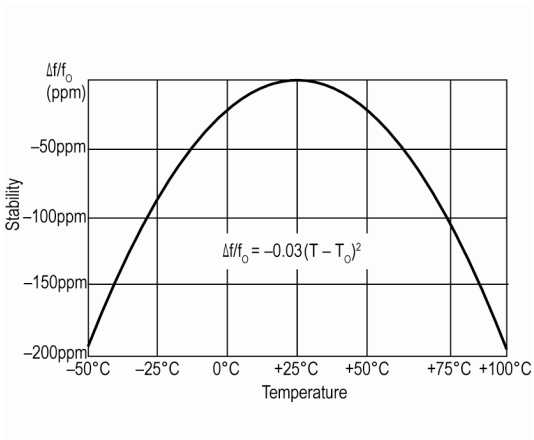

Manufacturing Details

- Maximum Reflow Temperature: 260°C for 5secs max
- RoHS Terminations Au over Ni over W base
- RoHS Reflow Temp 260°C max for 5secs max

Compliance

- RoHS Status (2015/863/EU) Compliant
- REACh Status Compliant
- MSL Rating (JDEC-STD-033): Not Applicable

Packaging Details

- Tape & reel in accordance with EIA-481
  Quantities below the standard reel size to be supplied on cut tape.
  Standard Quantity: 3,000 Pieces
-

  Standard Quantity: 3,000 Pieces

Sales Office Contact Details:

UK: +44 (0)1460 270200

USA: +1.760 668 8935

Email: info@iqdfrequencyproducts.com

Web: www.iqdfrequencyproducts.com

Unikeyic Electronics

Global Electronic Components Distributor

Click to view pricing, inventory, delivery, and lifecycle information:

IQD Frequency:

LF SPXO018035 LF XTAL003127 LFSPXO018038 LFXTAL026900 LFXTAL027945 LF SPXO025559
LFXTAL059532 LFXTAL072604 LFXTAL003000 LFXTAL009706 LFXTAL029914 LFXTAL059815
LFXTAL061648 LFXTAL009650 LFXTAL009678 LFXTAL082071 LF XTAL012313 LFXTAL030234
LFXTAL059575 LFXTAL085874 LFTVXO009907BULK LFXTAL085880 LF XTAL003335 LF XTAL016788
LFSPXO018036 LFSPXO066657 LFSPXO071189REEL LFXTAL035266 LFXTAL035599 LFXTAL059530