TAIWAN TONGJIA OPTOELECTRONICS TECHNOLOGY CO., LTD

# 承 認 書

# Specification For Approval

Customer: (客戶) _____

Description:(產品描述) 3MM圓頭無邊透明普綠

Part number:(產品型號) TJ-L3FYWXHTCGSFLC7K-A5

Date: (日期) _____

Approved By: (客戶承認)

Prepared By:(我司承認)

| Approval | Check | Design | Sales |
|---|---|---|---|
| | | | |
| 核准 | 審核 | 製作 | 業務 |

Customer Service Hotline：**400-676-8616**

TEL：0769-8662 5999　　0769-8200 2226　　FAX：0769-8200 2227

E-MIAL：dg@togialed.com　　WEB：www.togialed.com

Features :

* Low power consumption
* Small efficiency.
* Versatile mounting on p.c board or panel.
* I.C compatible/ low current requirement.
* Package Dimensions：

Unit : mm

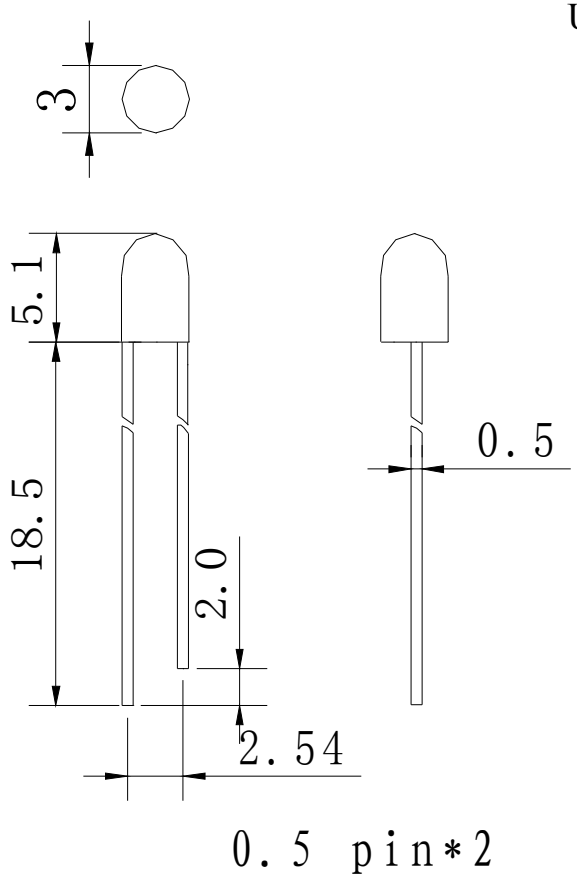


Note：

1：All dimensions are in millimeters (inches).

2：Tolerance is ±0.25mm (.010”) unless otherwise noted.

3： Specifications are subject to change without notices.

4：This specification is for reference only for one year

## *Absolute Maximum Ratings at Ta=25℃*

| Parameter | Rating | Unit |
|---|---|---|
| Power Dissipation(Pd) | 72 | mW |
| Peak Forward Current(1/10 Duty Cycle 0.1ms pulse Width | 100 | mA |
| Forward Current(IF) | 20 | mA |
| Reverse Voltage(VR) | 5 | V |
| Operating Temperature Range | -20℃ ~ +80℃ | |
| Storage Temperature Range | -30℃ ~ +100℃ | |
| Lead Soldering Temperature(4.0mm Form Body | 260℃ for 5 Seconds | |

## *Electronical / Optical Charateristics at Ta=25℃*

| Parameter | Min | Tvo | Max | Unit | Test Condition |
|---|---|---|---|---|---|
| Luminous Intensity(IV) | 150 | ----- | **400** | mcd | If=20mA |
| Viewing Angle(2 θ 1/2) | ----- | 30 | ----- | deg | If=20mA |
| The wavelength( λ ) | 565 | —— | 575 | nm | If=20mA |
| Forward Voltage(VF) | **1.8** | ----- | 2.6 | V | If=20mA |
| Reverse Current(IR) | | ----- | 5 | μA | Vr=5V |

## *Selection Guide* ：

| **Lens color** | **Chip** | | |
|---|---|---|---|
| Water Clear | Material | **Emittedcolor** | λp(nm) |
| | AlGaInP | Green | 575 |

## *Selection Guide*

Typical Electrical/Optical Characteristics Curves(25℃ Ambient Temperature Unle

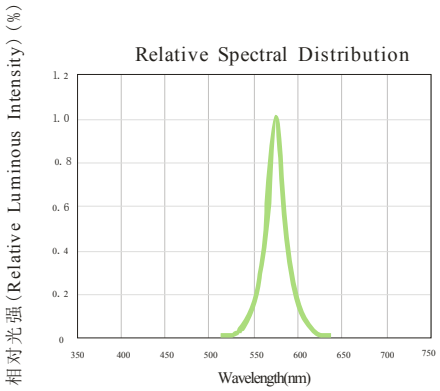


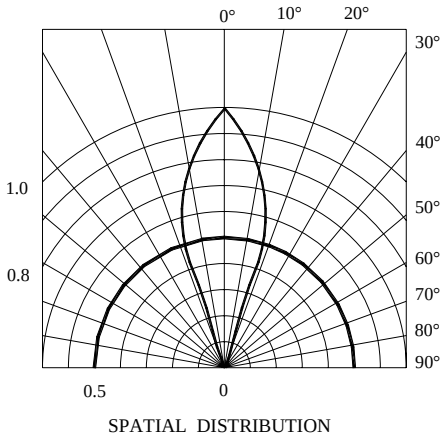


SPATIAL DISTRIBUTION

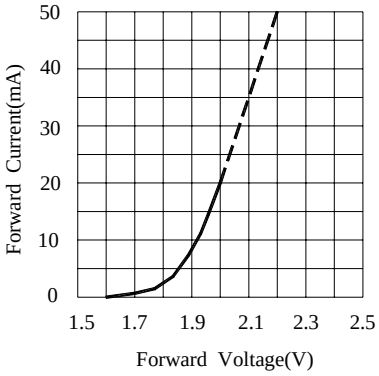


FORWARD CURRENT Vs.
FORWARD VOLTAGE

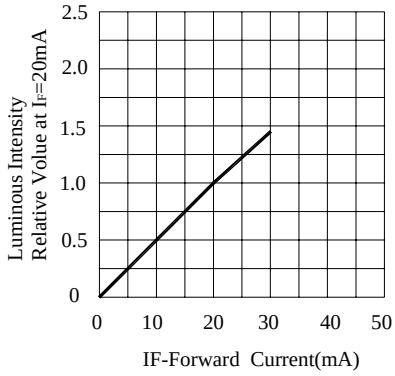


LUMINOUS INTENSITY Vs.
FORWARD CURRENT

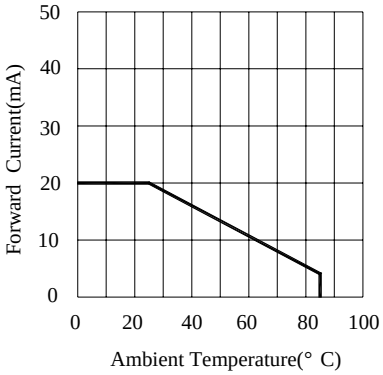


FORWARD CURRENT
DERATING CURVE

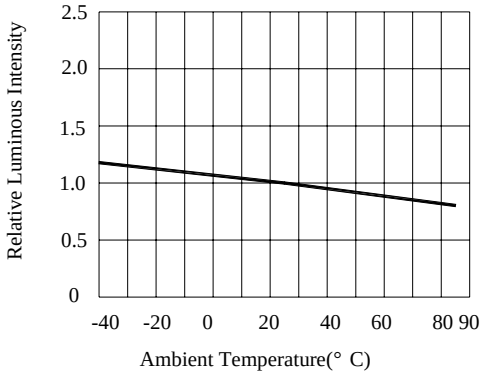


LUMINOUS INTENSITY Vs.
AMBIENT TEMPARATURE

Labe

P/N: The product model
IV: Luminous intensity rank
VF: Forward voltage rank
TC: Color temperature
Q`T: number
QC: Production order

# The packing

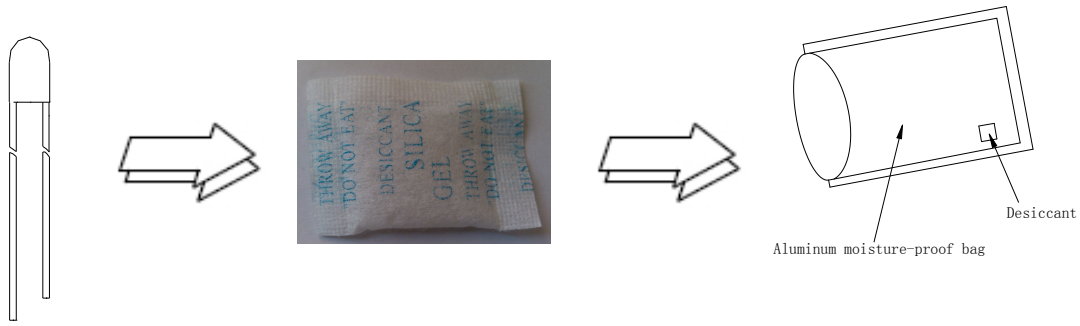


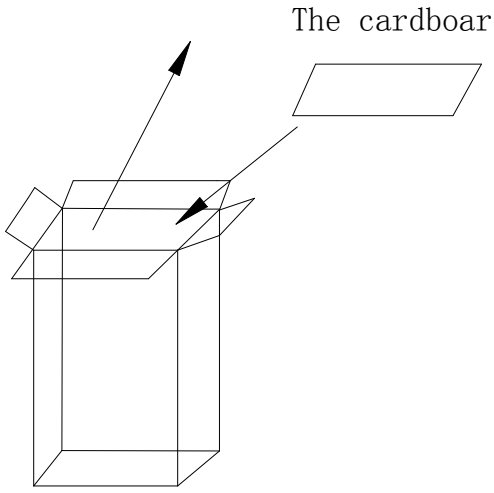


**Package specification：**

Package Method： packaged in anti-static bag White：Packaged in sorted light and color

2000pcs/bag General light 2000pcs/bag

note: Package specification mentioned above is under normal circumstance. Specific demand can be negotiated

# *Supporter shaping*:

Shaping of the supporter must be conducted before welding. While shaping, the bending position of the supporter must at least be located at 3mm from the bottom of the encapsulating resin. Also, avoid multiple bending on the same position。Please choose the appropriate apparatus to fixate the supporter in order to avoid exerting extra pressure on resin. Using the jointing section of the pin and resin as fulcrum is strictly prohibited since the pressure mounted would directly damage the internal 。illuminating structure and thus cause irreversible defection of the product..Due to the same reason, the interval between the welding hole on the PCB board should be strictly matched with the pin interval of the product when assembling the product.

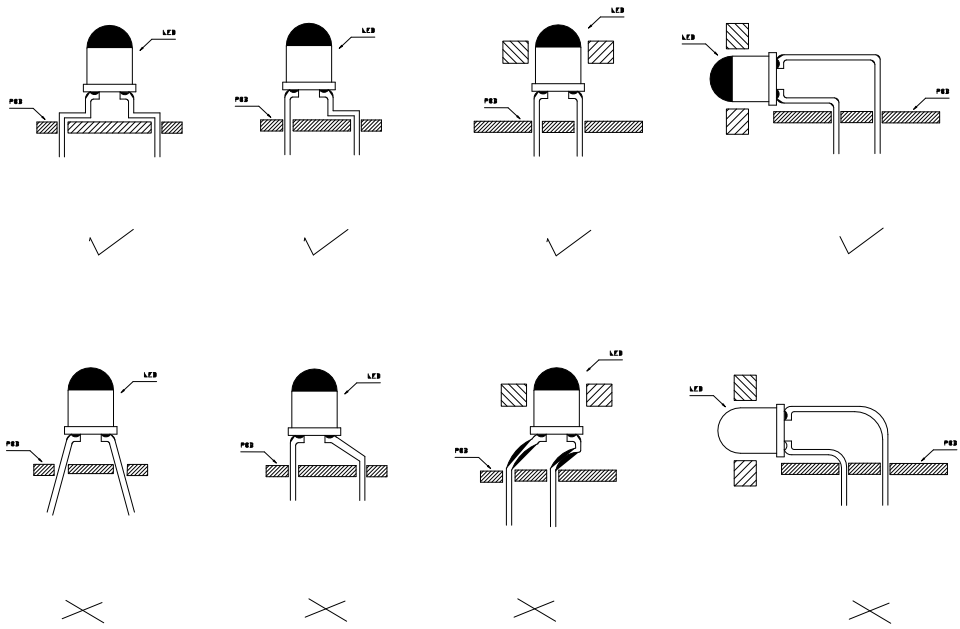

✓ correct mounting methods

✗ Incorrect mounting methods

## *Reliability experiment items and conditions*

| Serial number | Testing project | Test conditions | Sample quantity | Acceptance/rejection |
|---|---|---|---|---|
| 1 | Life test | Test current；20MA<br>temperature；25℃<br>Testing time；1000 hours | 20 | 0/1 |
| 2 | High temperature high humidity (static test) | temperature；=+65℃<br>humidity；90% RH<br>Testing time；240 hours | 20 | 0/1 |
| 3 | Cold and hot impact | -40℃- +100℃<br>20min 10s 20min<br>Testing time；100 cycle | 20 | 0/1 |
| 4 | High temperature storage | High temperature；100℃<br>Testing time；1000 hours | 20 | 0/1 |
| 5 | Low temperature storage | Low temperature；-40℃<br>Testing time；1000 hours | 20 | 0/1 |
| 6 | temperature cycle | -40℃-- +100℃<br>60min 20min 60min<br>Testing time；20A cycle | 20 | 0/1 |
| 7 | Reflow soldering | 260℃ (Max), The biggest not more than 5 seconds | 20 | 0/1 |

## note

Reliability experiment unqualified decision criteria

IV; Attenuation of more than 30%　VF; Change more than 20% ；

1. The same project experimental results of the test must be completed within two hours

2. Testing must be in every experiment is completed. Material return to normal conditions to carry out

# ESD protective

1 Electrostatic generation

1； Friction: in the daily life. Any two different material object contact after the separation, can produce a staticelectric ，Static electricity and the most common method ，Is triboelectrification ◦The insulation material, the better ，More letEasy triboelectrification ◦ In addition ，Any two different material object contact after separation ，Can also produce electrostatic ◦

2. Induction: in view of the conductive material is concerned, because the surface of the electronic can free flow, such as placed it in electric fieldbecauseGay repellent ，Opposites attract ，Are negative ions will transfer ， In its surface can produce charge ◦

3. Transmission: in view of the conductive material is concerned, because the surface of the electronic can free flow ，If charged object contact, will be charge transfer.

4. The harm of static electricity LED：

.1 For the moment's electric field or the heat generated by the current ，Make LED localinjury ，For the performance of the leakage current increase quickly ，Can stillwork ，But the brightness is reduced (white light will change color), life is damaged ◦

5 Because the electric field or current failure LED insulating layer ，Make device can't work (destroyed) ，Performance for die lamp ◦

6； Electrostatic protection and elimination measures：

a. For the whole process (production, testing, packaging, etc.) All LED directly contact member must do it well Prevent and Eliminate electrostatic measures, basically have: workshop laid anti-static floor and well grounded ◦

b. Table for esd workstation, the production of the good earth
c. Operator wear anti-static clothing, with wrist strap, gloves or foot ring ◦
d. Application of ion fan, welding solder iron well grounding measures ◦
e. The package antistatic material

# Unikeyic Electronics

Global Electronic Components Distributor

Click to view pricing, inventory, delivery, and lifecycle information:

## TOGIALED:

TJ-S3528UG6W9TLC2G-A5 TJ-L3FYTLDKMCGSFLC7K-A5 TJ-L5FYTXHTCYLCRGB-A5
TJ-S1005SW4TGLC6B-A5 TJ-S1608SW6TGLC2R-A5 TJ-S1608SW6TNPGLCRB-A5
TJ-S1615SW6TGLCRG-A5 TJ-L5FCMXHTCYLCRGB-A5 TJ-L5FYTXHMCYLCRGB-A5
TJ-S2012SW8TGLC2G-A5 TJ-L3FYTGCGMCGLFLC2G-A5 TJ-L3FYTXHMCYLC2R2G-A5
TJ-S1608SW6TGLC6B-A5 TJ-S3528UG6W9TLC2R-A5 TJ-S1608SW6TGLC2G-A5
TJ-S1706SW6TGLC2G-A5 TJ-S1706SW6TGLCCW-A5 TJ-L3FYTLDRMFCSFLC2R-A5
TJ-S1608SW6TGLC9Y-A5 TJ-L5FYTGCRTFCSFLC2R-A5 TJ-L5FYTGHRMFCLFLC2R-A5
TJ-S1615SW6TGLCCYRGB-A5 TJ-L3FYTGHTFCSFLC2R-A5 TJ-L3FYTXHAMCGLFLC0A-A5
TJ-S1608SW6TNPGLCRG-A5 TJ-L3FYTGCBMCGSFLC6B-A5 TJ-L3FYTGHRMFCLFLC2R-A5
TJ-S1615CY6TGLCCSRGB-A5 TJ-S1706SW6TGLC6B-A5 TJ-S3216SW9TGLC2G-A5