Push-in fittings QS, standard



★	Festo Core Range Solves the majority of your automation tasks	With the Festo Core Range, we have selected the most important products and functions from our broad product catalogue, and added the quickest delivery.
Worldwide:	Quickest delivery – wherever, whenever	The Core Range offers you the best value for your automation tasks.
Simply good:	Expected high Festo quality	
Fast:	Easy and fast to select	

Just look for the star!

Key features

Application



Choosing the right fitting is effortless. With a system that includes well over 1000 types of standard and function fittings, Festo offers the right solution for every connection.

Overview of tubing/fitting combinations

Applications	Fitting	Tubing	Description
Standard	QS(M)	PUN-H	Maximum flexibility in standard applications thanks to an extremely wide range of options for combining the different types.
	QS(M)	PEN	Suitable for a wide range of tasks and attractively priced. Flexible thanks to highly resistant materials, easy to install thanks to optimised bending radii. High level of abrasion resistance in dynamic applications.
	QS(M)	PAN	Meets all requirements, even for standard applications with increased pressure and temperature ranges.
High pressures	NPQM	PAN-MF	Meets DIN standard 73378: ideal for use in mobile pneumatics. Suitable for increased temperature ranges combined with high pressure ranges.
	NPQH	PAN-R	Powerful in pressure ranges up to 20 bar, for example in applications with the pressure booster DPA.
Resistant to chemicals, food-safe and hydrolysis-resistant	NPQP	PLN	Resistant to cleaning agents, FDA-compliant and economical. Can be used instead of the combination with stainless steel fittings.
	NPKA	PUN-H	Hydrolysis-resistant and suitable for water applications. Combination suitable for use in cleanrooms, FDA-compliant and corrosion-resistant because it's 100% polymer. Very easy to install with the "one click principle".
	NPQH	PFAN/PTFEN	For high temperatures up to 150°C. Food-safe, FDA-compliant and resistant to cleaning agents.
	NPCK	PFAN/PTFEN	Easy to clean thanks to the union nut's edge-free design. Maximum corrosion resistance (CRC 4) and FDA-compliant. Suitable for a wide range of media.
Resistant to chemicals and hydrolysis	NPQR	PFAN/PTFEN	Optimised design, fewer edges where dirt can collect – all at an attractive price. For high temperatures up to 150°C. Pressure range up to 16 bar. Maximum corrosion resistance (CRC 4).
Antistatic	NPQM	PUN-CM	Antistatic tubing plus solid metal fitting: maximum protection for electric and electronic components.
Flame-retardant	NPQM	PUN-V0	Very safe in areas where there is a risk of fire with its flame-retardant properties. The tubing has been tested to DIN 5510-2.
Resistant to welding spatter	NPQH	PUN-V0-C	Ideal for applications involving welding spatter. Reliable thanks to a tubing wall thickness of 2 mm for all diameters.
	QS-V0	PAN-V0	Safe even in the close vicinity of welding spatter with the double-walled tubing with special fitting.

Key features

Push-in fittings – product range

QSM, mini — Datasheets → Internet: qsm



Miniature push-in fittings for maximum component density in confined spaces. For pneumatic applications with a temperature range up to 80°C and a pressure range up to 14 bar.
Tubing O.D. of 2, 3, 4 and 6 mm with connecting threads M3, M5, M6, M7, R1/8 and G1/8.

QS, standard — Datasheets → Internet: qs



Wide selection of push-in fittings for pneumatic applications with a temperature range up to 80°C and a pressure range up to 14 bar.
Tubing O.D. 4, 6, 8, 10, 12, 16 and 22 mm with connecting threads R1/8 ... R1/2 and G1/8 ... G3/4.

QS-V0, resistant to welding spatter — Datasheets → Internet: qs-v0



Flame-retardant push-in fitting for use in all areas where there is a risk of fire, for example welding systems in the automotive industry, and in the construction industry. For pneumatic applications with a temperature range up to 60°C and a pressure range up to 10 bar.
Tubing O.D. 4, 6, 8, 10 and 12 mm with connecting thread R1/8 ... R1/2 and G1/8 ... G1/2.

NPQH — Datasheets → Internet: npqh



All-metal push-in fitting made of chemically nickel-plated brass. High corrosion resistance CRC 3 and chemical resistance. For pneumatic applications with a temperature range up to 150°C and a pressure range up to 20 bar.
Tubing O.D. 4, 6, 8, 10, 12 and 14 mm with connecting threads M5, M7 and G1/8 ... G1/2.

NPQM — Datasheets → Internet: npqm



Attractively priced metal push-in fitting for pneumatic applications with a temperature range up to 70°C and a pressure range up to 16 bar.
Tubing O.D. 3, 4, 6, 8, 10, 12 and 14 mm with connecting threads M5, M7 and G1/8 ... G1/2.

NPQP — Datasheets → Internet: npqp



Polypropylene fitting for use in applications with extreme media influences. For pneumatic applications with a temperature range up to 60°C and a pressure range up to 10 bar.
Tubing O.D. 4, 6, 8, 10 and 12 mm with connecting threads R1/8 ... R1/2.

NPQR, stainless steel — Datasheets → Internet: npqr



Stainless steel push-in fitting. Maximum corrosion resistance CRC 4 and chemical resistance. For pneumatic applications with a temperature range up to 150°C and a pressure range up to 16 bar.
Tubing O.D. of 4, 6, 8, 10 and 12 mm with connecting threads M5, M7 and G1/8 ... G1/2.

Key features

Functional push-in fittings – product range

QSK,
push-in fitting, self-sealing
Datasheets ➔ Internet: qsk



Push-in fitting that blocks the air flow after the tubing is disconnected. For pneumatic applications with a temperature range up to 60°C and a pressure range up to 14 bar.
Tubing O.D. 4, 6, 8, 10 and 12 mm with connecting threads M5, R1/8 ... R1/2 and G1/8 ... G1/2.

QSR,
push-in fitting, rotatable
Datasheets ➔ Internet: qsr



Push-in fitting with swivel joint, rotatable 360°. The ball bearing enables rotating movements in the application up to max. 500 rpm. For pneumatic applications with a temperature range up to 60°C and a pressure range up to 14 bar.
Tubing O.D. 4, 6, 8, 10 and 12 mm with connecting threads M5, R1/8 ... R1/2 and G1/8 ... G1/2.

Quick connectors – product range

NPCK
Datasheets ➔ Internet: npck



Stainless steel fitting for use in areas subject to intensive cleaning. Maximum level of corrosion resistance CRC 4. For pneumatic applications with a temperature range up to 120°C and a pressure range up to 12 bar.
Tubing O.D. of 4, 6, 8 and 10 mm with connecting threads M5 and G1/8 ... G3/8.

Click fittings – product range

NPKA
Datasheets ➔ Internet: npka



Plastic fitting for easy installation with one hand. Hydrolysis-resistant, FDA-compliant and easy to clean. For pneumatic applications with a temperature range up to 60°C and a pressure range up to 10 bar.
Tubing O.D. of 6 mm with connecting thread G1/8.

Simply "plug and work"

The stainless steel retaining claw holds the tubing securely without damaging its surface. Vibration and pressure surges are absorbed.

Reliably connected

A nitrile rubber sealing ring guarantees a perfect seal between standard OD tubing and the body of the fitting. The standard tubing combined with the Festo push-in connector is suitable for compressed air and vacuum.

The captive seal

All brass parts of Festo's push-in fittings have nickel-plated surfaces and are thus highly resistant to corrosion. The tapered ISO R threads have a self-sealing PTFE coating, which allows the fitting to be re-used up to five times without the need for additional sealing components.

Rotatable

It can be rotated once it has been fitted.

Key features

Which fitting fits which thread?

Metric thread
- These threads are comparable with G threads and are fitted as cylindrical metric threads
- Sealing is guaranteed as the O-ring sits in a groove that seals against the tube.

G thread to ISO 228-1
- Shorter thread
- Constant installation depth
- Replaceable sealing ring
- Sealing on the front
- Can be re-used a number of times thanks to replaceable sealing ring.

R thread to EN 10226-1 and ISO 7/1
- Self-sealing thread
- Sealing via coated threads
- No additional sealing surface required
- Smaller installation dimensions since there is no need for an offset for the sealing surface
- Can be reused up to 5 times.

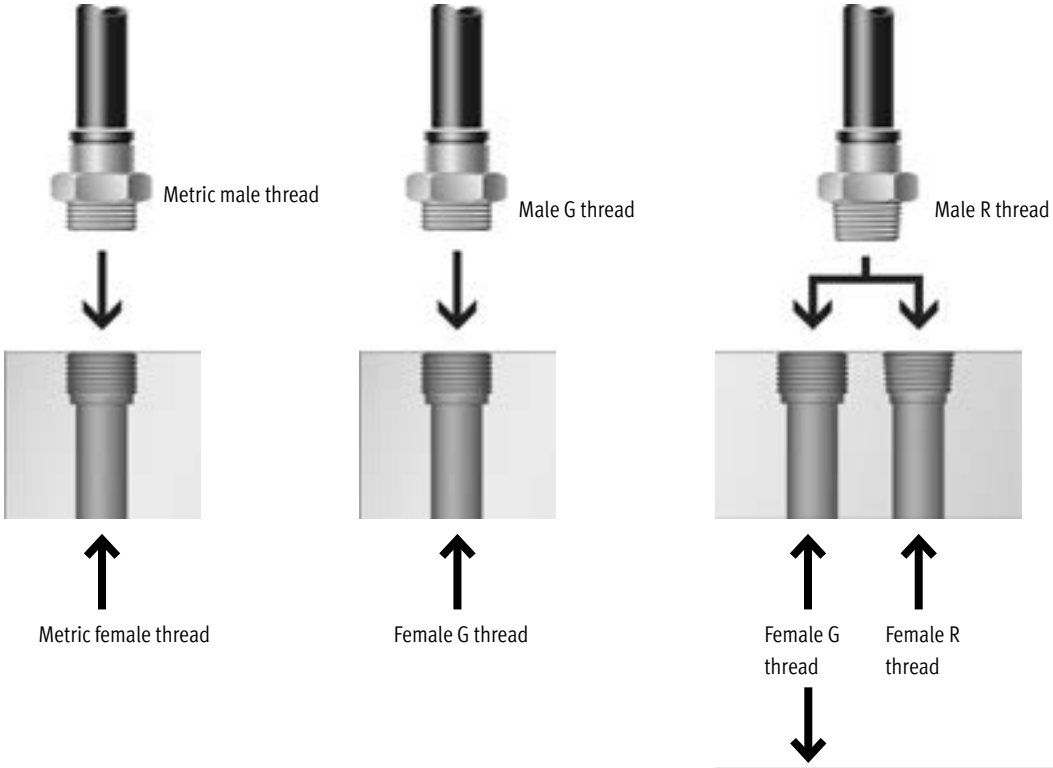

Note

If male R threads are combined with female G threads, leakage can occur if the female G thread was not manufactured cleanly or if it is not within permissible tolerances. In this case additional sealing, e.g. using a sealing band, is required.

Note

All R threads are coated with a sealing material. This coating replaces the conventional sealing ring. Simply screw in the R thread by hand and tighten it by turning it 1 or 2 times using an open-ended spanner. The fitting can be re-installed up to five times.

When screwing in R threads several times, you must make sure that the abraded particles from the sealing material coating cannot enter the compressed air system.

Key features

Fitting/removing the tubing

Fitting

The prerequisite for ensuring that the inside seal is securely held and protected against damage is that the tube is cut into straight lengths and deburred.

1) Insert tubing as far as the stop.
   It is important to ensure that the tubing is inserted into the inner seal. Depending on the tolerance between the tubing and the seal, the contact of the tubing with the seal may be wrongly interpreted as the stop.
2) Check that the tubing connection is secure by pulling gently on the tube.

Removal

1) The tubing can be detached easily by pressing and holding down the release ring. Carefully remove the tubing from the fitting.
2) Before re-using the tubing, remove the damaged part by cutting it off.

Technical data

General technical data

Design		Push-pull principle
Mounting position		Any
Type of seal on screwed trunnion		Sealing ring for M/G thread
		Coating for R thread
Nominal tightening torque	[Nm]	1.33 ±20% for M5 male thread
		7 ±20% with G1/8 male thread
		9 ±20% with G1/4 male thread
		15.5 ±20% with G3/8 male thread
		26 ±20% with G1/2 male thread
		20 ±20% with G3/4 male thread
Tubing insertion depth[1]	[mm]	15 with tubing O.D. 4 mm (12 with QSW)
		17 with tubing O.D. 6 mm (12 with QSW)
		18 with tubing O.D. 8 mm
		20.5 with tubing O.D. 10 mm
		23.5 with tubing O.D. 12 mm
		24.5 with tubing O.D. 16 mm
		28 with tubing O.D. 22 mm

1) The indicated tubing insertion depths are reference values and may vary slightly depending on the type.

Note

When using push-in fittings with internal hex, ensure that the Allen key is not inserted too far into the fitting when tightening it, to prevent the risk of damage to components behind the fitting.

Operating and environmental conditions

Type		Except QS-G3/4-22	QS-G3/4-22
Operating pressure for entire temperature range	[bar]	–0.95 ... +6	–0.95 ... +14
Temperature-dependent operating pressure	[bar]	–0.95 ... +14 → graph	–0.95 ... +14
Operating medium		Compressed air to ISO 8573-1:2010 [7:–:–]	
		Water as per manufacturer's declaration[1)2)]	
Note on the operating/pilot medium		Lubricated operation possible	
Ambient temperature	[°C]	–10 ... +80	–20 ... +80
Corrosion resistance class CRC[3]		1	
Maritime classification		See certificate[1]	–

1) Additional information: www.festo.com/catalogue/qs → Support/Downloads.
2) The sealing ring supplied must be replaced with a sealing ring OL on push-in fittings with a G thread → Internet: ol
3) Additional information: www.festo.com/x/topic/kbk

Technical data

Operating pressure p as a function of temperature t (except QS-G3/4-22)

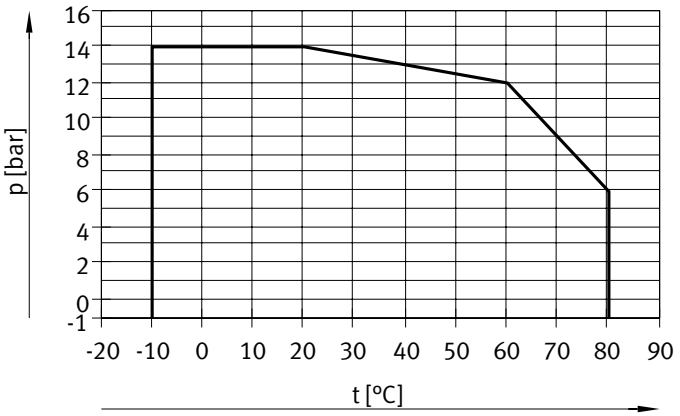

Materials

Sectional view

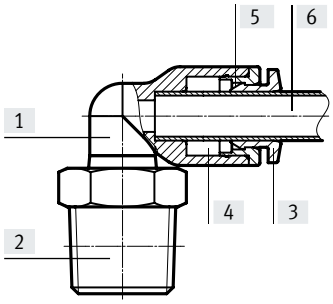

Type		QS, standard
[1]	Housing	Nickel-plated brass, PBT, anodised aluminium
[2]	Screwed trunnion	Nickel-plated brass
[3]	Releasing ring	POM (colour: blue)
[4]	Tubing seal	NBR
[5]	Tube clamping segment	High-alloy stainless steel
[6]	Plastic tubing, standard O.D.	PUN-H, PEN, PAN
[–]	Nut (QSS/QSSF)	Nickel-plated brass
[–]	Hollow bolt (QSLV/QSTF/QSYLV)	Nickel-plated brass
Note on materials		RoHS-compliant
PWIS conformity		VDMA24364-B1/B2-L

Possible push-in fitting/tubing combinations

Thread	Tubing O.D. [mm]						
	4	6	8	10	12	16	22
M5	++	+	–	–	–	–	–
R1/8	+	++	+	+	–	–	–
R1/4	+	+	++	+	+	–	–
R3/8	–	+	+	++	+	+	–
R1/2	–	–	–	+	++	+	–
G1/8	+	++	+	+	–	–	–
G1/4	+	+	++	+	+	–	–
G3/8	–	+	+	++	+	+	–
G1/2	–	–	–	–	++	+	–
G3/4	–	–	–	–	–	–	++

\+ Possible thread/tubing O.D. combinations

++ Optimum thread/tubing O.D. combination (for the flow rate)

Product range overview

Design	Design	Type	Connection D1					Connection D2		→ Page
			M thread	R thread	G thread	Tubing O.D.	Push-in sleeve ⌀	Tubing O.D.	Push-in sleeve ⌀	
Straight shape	**Push-in fitting – Male thread with external hex**									
		**QS**	–	R1/8	G1/8	–	–	4, 6, 8, 10[1]	–	14
				R1/4	G1/4			4[1], 6, 8, 10, 12		
				R3/8	G3/8			6[1], 8, 10, 12, 16		
				R1/2	G1/2			10[1], 12, 16		
				–	G3/4			22		16
	Push-in fitting – Male thread with internal hex									
		**QS-...-I**	–	R1/8	G1/8	–	–	4, 6, 8, 10	–	17
				R1/4	G1/4			6, 8, 10, 12[1]		
				R3/8	G3/8			8, 10, 12		
				R1/2	G1/2			10[1], 12		
	Push-in fitting – Female thread with external hex									
		**QSF**	–	–	G1/8	–	–	4, 6, 8	–	19
					G1/4			4, 6, 8, 10, 12		
					G3/8			6, 8, 10, 12		
					G1/2			12, 16		
	Push-in connector									
	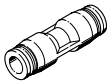	**QS**	–	–	–	4	–	4	–	20
						6		6		
						8		8		
						10		10		
						12		12		
						16		16		
	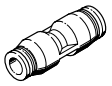	**QS** Reducing	–	–	–	6	–	4	–	20
						8		4, 6		
						10		6, 8		
						12		8, 10		
	Push-in bulkhead connector									
	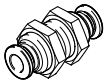	**QSS**	–	–	–	4	–	–	–	21
						6				
						8				
						10				
						12				
	Push-in bulkhead connector with fixed collar									
	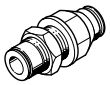	**QSS-...-F**	–	–	–	4	–	–	–	21
						6				
						8				
						10				
						12				
	Bulkhead push-in fitting with female thread									
		**QSSF**	–	–	G1/8	–	–	4, 6, 8	–	22
					G1/4			4, 6, 8, 10		
					G3/8			6, 8, 10, 12		
					G1/2			12, 16		

1) Only in conjunction with R thread

Product range overview

Design	Design	Type	Connection D1					Connection D2		→ Page
			M thread	R thread	G thread	Tubing O.D.	Push-in sleeve ⌀	Tubing O.D.	Push-in sleeve ⌀	
Straight shape	**Push-in cap**									
		**QSC**	–	–	–	4	–	–	–	23
						6				
						8				
						10				
						12				
	Push-in connector with push-in sleeve									
	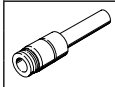	**QS-...H**	–	–	–	–	6	4	–	24
							8	4, 6		
							10	6, 8		
							12	6, 8, 10		
	Push-in sleeve									
	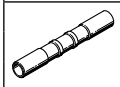	**QSH**	–	–	–	–	4	–	–	25
							6			
							8			
							10			
							12			
							16			
	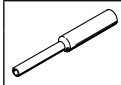	**QSH** Reducing	–	–	–	–	6	–	4	25
							8		4, 6	
							10		6, 8	
							12		8, 10	
							16		12	
	Blanking plug									
	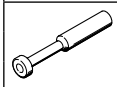	**QSC-...H**	–	–	–	–	4	–	–	26
							6			
							8			
							10			
							12			
							16			
L-shape	**Push-in L-fitting – Male thread with external hex, rotatable**									
		**QSL**	–	R1/8	G1/8	–	–	4, 6, 8, 10[1]	–	27
				R1/4	G1/4			4[1], 6, 8, 10, 12		
				R3/8	G3/8			6[1], 8, 10, 12, 16		
				R1/2	G1/2			10[1], 12, 16		
	Push-in L-fitting, long – male thread with external hex, rotatable									
	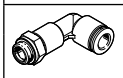	**QSLL**	–	R1/8	G1/8	–	–	4, 6, 8	–	29
				R1/4	G1/4			4[1], 6, 8, 10, 12[2]		
				R3/8	G3/8			6[1], 8, 10, 12		
				R1/2	G1/2			10[1], 12, 16[2]		

1) Only in conjunction with R thread
2) Only in conjunction with G thread

Product range overview

Design	Design	Type	Connection D1					Connection D2		→ Page
			M thread	R thread	G thread	Tubing O.D.	Push-in sleeve ⌀	Tubing O.D.	Push-in sleeve ⌀	
L-shape	**Push-in L-fitting – Female thread with external hex, rotatable**									
	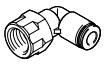	**QSLF**	–	–	G1/8	–	–	4, 6, 8	–	31
					G1/4			6, 8, 10		
					G3/8			8, 10		
	Push-in L-fitting – Male thread with internal hex, rotatable									
		**QSLV-...-I**	–	R1/8	G1/8	–	–	6, 8	–	32
				R1/4	G1/4			6, 8, 10		
				R3/8	G3/8			8, 10, 12		
				R1/2	G1/2			12		
	Push-in L-fitting – Male thread with external hex, rotatable									
		**QSLV**	M5	–	–	–	–	6	–	33
			–	R1/8	G1/8	–	–	4, 6, 8	–	
				R1/4	G1/4			6, 8, 10		
				R3/8	G3/8			8, 10, 12		
				R1/2	G1/2			12, 16		
	Push-in L-connector									
		**QSL**	–	–	–	4	–	–	–	35
						6				
						8				
						10				
						12				
						16				
	Push-in L-connector with push-in sleeve									
		**QSL-...H**	–	–	–	–	4	4	–	36
							6	6		
							8	8		
							10	10		
							12	12		
	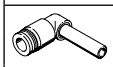	**QSL-...H** Reducing	–	–	–	–	6	4	–	36
							8	6		
							10	8		
							12	10		
	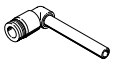	**QSL-...HL** Long push-in sleeve	–	–	–	–	4	4	–	36
							6	6		
							8	8		
							10	10		
							12	12		

Product range overview

Design	Design	Type	Connection D1					Connection D2		→ Page
			M thread	R thread	G thread	Tubing O.D.	Push-in sleeve ⌀	Tubing O.D.	Push-in sleeve ⌀	
T-shape	**Push-in T-fitting – Male thread with external hex, rotatable**									
	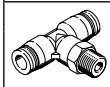	**QST**	–	R1/8	G1/8	–	–	4, 6, 8, 10[1]	–	37
				R1/4	G1/4			4[1], 6, 8, 10, 12		
				R3/8	G3/8			6[1], 8, 10, 12, 16		
				R1/2	G1/2			10[1], 12, 16		
	Push-in T-connector									
	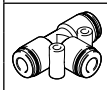	**QST**	–	–	–	4	–	4	–	39
						6		6		
						8		8		
						10		10		
						12		12		
						16		16		
		**QST** Reducing	–	–	–	6	–	4	–	39
						8		4, 6		
						10		6, 8		
						12		8, 10		
						16		12		
	Push-in T-fitting – Male and female thread with external hex, rotatable									
	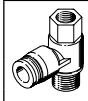	**QSTF**	–	R1/8	G1/8	–	–	4, 6, 8	–	40
				R1/4	G1/4			6, 8, 10		
				R3/8	G3/8			8, 10, 12		
				R1/2	G1/2			12		
	Push-in T-fitting – Male thread with external hex, rotatable									
	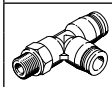	**QSTL**	–	R1/8	G1/8	–	–	4, 6, 8	–	41
				R1/4	G1/4			6, 8, 10		
				R3/8	G3/8			8, 10, 12		
				R1/2	G1/2			12, 16		
Angled 45°	**Push-in fitting – Male thread with external hex, rotatable**									
		**QSW**	–	R1/8	–	–	–	4, 6, 8	–	43
				R1/4				6, 8, 10		
				R3/8				10, 12		
				R1/2				12, 16		
	Push-in connector with push-in sleeve									
	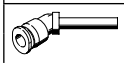	**QSW-...HL**	–	–	–	–	4	4	–	44
							6	6		
							8	8		
							10	10		
							12	12		
X shape	**Push-in X-connector**									
	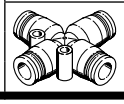	**QSX**	–	–	–	8	–	–	–	44
						10				
						12				

1) Only in conjunction with R thread

Product range overview

Design	Design	Type	Connection D1					Connection D2		→ Page
			M thread	R thread	G thread	Tubing O.D.	Push-in sleeve ø	Tubing O.D.	Push-in sleeve ø	
Y shape	**Push-in Y-fitting – Male thread with external hex, rotatable**									
	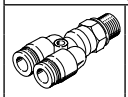	**QSY**	M5	–	–	–	–	4, 6	–	45
			–	R1/8	G1/8			4, 6, 8		
				R1/4	G1/4			4[1], 6, 8, 10		
				R3/8	G3/8			8, 10, 12		
				R1/2	G1/2			10[1], 12		
	Push-in Y-connector									
	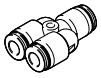	**QSY**	–	–	–	4	–	4	–	47
						6		6		
						8		8		
						10		10		
						12		12		
						16		16		
	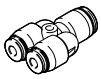	**QSY** Reducing	–	–	–	6	–	4	–	47
						8		4, 6		
						10		6, 8		
						12		8, 10		
						16		12		
	Push-in Y-connector with push-in sleeve									
	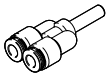	**QSY-...H(-B)**	–	–	–	–	4	4	–	48
							6	6		
							8	8		
							10	10		
							12	12		
	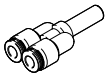	**QSY-...H(-B)** Reducing	–	–	–	–	6	4	–	48
							8	6		
							10	8		
							12	10		
	Push-in Y-fitting – Male thread with external hex, rotatable									
		**QSYL**	–	R1/8	G1/8	–	–	4, 6, 8	–	49
				R1/4	G1/4			6, 8, 10		
				R3/8	G3/8			8, 10, 12		
				R1/2	G1/2			12		
	Push-in Y-fitting – Male thread with external hex, rotatable									
		**QSYLV**	–	R1/8	G1/8	–	–	6	–	50
				R1/4	G1/4			8		
				R3/8	G3/8			10		
				R1/2	G1/2			12		
Releasing tool	**Quick-out releasing tool for push-in connections**									
	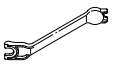	**QSO**								51

1) Only in conjunction with R thread

Datasheet

Push-in fitting QS
Male thread with external hex



R thread

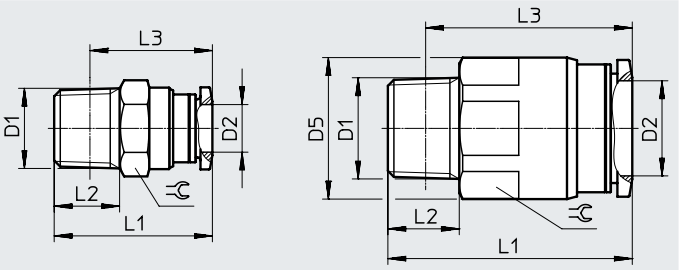

QS-3/8-16

Dimensions and ordering data

Pneumatic connection		Nominal width	Dimensions [mm]					Weight/ piece	Part no.	Type	PS[1]
Male thread D1	For tubing O.D. D2	[mm]	D5	L1	L2	L3	⊂=	[g]			
R thread											
R1/8	4	3	–	21	8	17	10	7.4	★ 153001	QS-1/8-4	10
									130674	QS-1/8-4-100	100
	6	5	–	22.3	8	18.3	12	8.2	★ 153002	QS-1/8-6	10
									130675	QS-1/8-6-100	100
	8	6	–	27.9	8	23.9	14	14	★ 153004	QS-1/8-8	10
									130676	QS-1/8-8-50	50
	10	6	–	30.3	8	26.3	17	21	★ 190643	QS-1/8-10	10
R1/4	4	3	–	22.5	11	16.5	14	16	★ 190644	QS-1/4-4	10
	6	5	–	23.7	11	17.6	14	15	★ 153003	QS-1/4-6	10
									130677	QS-1/4-6-100	100
	8	7	–	26.6	11	20.6	14	14	★ 153005	QS-1/4-8	10
									130678	QS-1/4-8-50	50
	10	8.5	–	29.8	11	23.8	17	19	★ 153007	QS-1/4-10	10
									130679	QS-1/4-10-50	50
	12	8.5	–	35.9	11	29.9	21	37	★ 164980	QS-1/4-12	10
									130680	QS-1/4-12-20	20
R3/8	6	5	–	24.5	12	18.1	17	28	★ 190645	QS-3/8-6	10
	8	7	–	25.5	12	19.2	17	25	★ 153006	QS-3/8-8	10
									130681	QS-3/8-8-50	50
	10	9	–	29.3	12	23	17	24	★ 153008	QS-3/8-10	10
									130682	QS-3/8-10-50	50
	12	11	–	31.9	12	25.6	21	30	★ 153009	QS-3/8-12	10
									130683	QS-3/8-12-20	20
	16	11	23.8	41.1	12	34.8	22	50	164957	QS-3/8-16	1
R1/2	10	9	–	30.4	15	22.2	21	46	★ 190646	QS-1/2-10	1
									133189	QS-1/2-10-50	50
	12	11	–	33.9	15	25.7	21	44	★ 153010	QS-1/2-12	1
									130684	QS-1/2-12-20	20
	16	13	–	41.3	15	33.1	24	63	153011	QS-1/2-16	1
									130685	QS-1/2-16-20	20

1) Pack size

Datasheet

Push-in fitting QS
Male thread with external hex



G thread

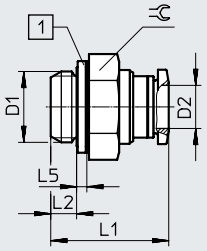

[1] Sealing ring

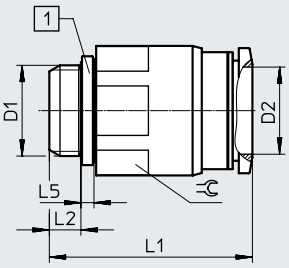

QS-G3/8-16

Dimensions and ordering data

Pneumatic connection		Nominal width	Dimensions [mm]				Weight/ piece	Part no.	Type	PS[1]
Male thread D1	For tubing O.D. D2	[mm]	L1	L2	L5	⫧	[g]			
G thread with sealing ring										
G1/8	4	3	19.5	4.2	1.9	13	9.1	★ **186095**	**QS-G1/8-4**	**10**
								132036	**QS-G1/8-4-100**	**100**
	6	5	20.6	4.2	1.9	13	8.3	★ **186096**	**QS-G1/8-6**	**10**
								132037	**QS-G1/8-6-100**	**100**
	8	6	25.8	4.2	1.9	14	13	★ **186098**	**QS-G1/8-8**	**10**
								132038	**QS-G1/8-8-50**	**50**
G1/4	6	5	21.2	4.8	1.9	17	17	★ **186097**	**QS-G1/4-6**	**10**
								132039	**QS-G1/4-6-100**	**100**
	8	7	21.9	4.8	1.9	17	15	★ **186099**	**QS-G1/4-8**	**10**
								132040	**QS-G1/4-8-50**	**50**
	10	8.5	28.9	4.8	1.9	17	21	★ **186101**	**QS-G1/4-10**	**10**
								132041	**QS-G1/4-10-50**	**50**
	12	8.5	34.1	4.8	1.9	21	39	★ **186350**	**QS-G1/4-12**	**10**
								132042	**QS-G1/4-12-20**	**20**
G3/8	8	7	21.7	5.8	2.4	19	22	★ **186100**	**QS-G3/8-8**	**10**
								132043	**QS-G3/8-8-50**	**50**
	10	9	25.4	5.8	2.4	19	22	★ **186102**	**QS-G3/8-10**	**10**
								132044	**QS-G3/8-10-50**	**50**
	12	11	31.5	5.8	2.4	21	33	★ **186103**	**QS-G3/8-12**	**10**
								132045	**QS-G3/8-12-20**	**20**
	16	11	37.3	5.8	2.4	22	45	**186347**	**QS-G3/8-16**	**1**
G1/2	12	11	28	6.8	2.4	24	39	★ **186104**	**QS-G1/2-12**	**1**
								132046	**QS-G1/2-12-20**	**20**
	16	13	35.3	6.8	2.4	24	51	**186105**	**QS-G1/2-16**	**1**
								132047	**QS-G1/2-16-20**	**20**

1) Pack size

Datasheet

Push-in fitting QS G3/4-22
Male thread with external hex



G thread

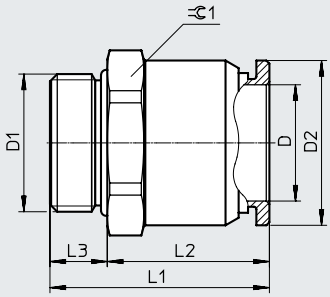

Dimensions and ordering data

Pneumatic connection		Nominal width	Dimensions [mm]					Weight/ piece	Part no.	Type	PS[1]
Male thread	For tubing O.D.		D2 ⌀	L1	L2	L3	⊂1				
D1	D	[mm]						[g]			
G thread with sealing ring											
G3/4	22	20	31.6	42.1	31.1	11	32	93.2	**8040613**	**QS-G3/4-22**	**1**

1) Pack size

Datasheet

Push-in fitting QS-...-I
Male thread with internal hex



R thread

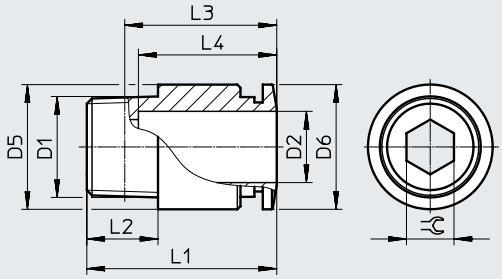

Dimensions and ordering data

Pneumatic connection		Nominal width	Dimensions [mm]								Weight/ piece	Part no.	Type	PS[1]
Male thread D1	For tubing O.D. D2	[mm]	D5 ⌀	D6 ⌀	L1	L2	L3	L4	L5	⌀	[g]			
R thread														
R1/8	4	2.6	9.7	9.9	20	8	16	14.9	–	2.5	6.6	★ **153012**	**QS-1/8-4-I**	**10**
												133191	**QS-1/8-4-I-100**	**100**
	6	4.2	11.8	11.8	22.1	8	18.1	17	–	4	7.6	★ **153013**	**QS-1/8-6-I**	**10**
												133186	**QS-1/8-6-I-100**	**100**
	8	5.3	13.7	13.8	25.9	8	21.9	18.2	–	5	8.8	★ **153015**	**QS-1/8-8-I**	**10**
												133187	**QS-1/8-8-I-50**	**50**
	10	5.3	17.5	16.8	30.3	8	26.3	20.7	–	5	17	★ **190647**	**QS-1/8-10-I**	**10**
R1/4	6	4.2	13.7	11.8	21.3	11	15.2	17	–	4	13	★ **153014**	**QS-1/4-6-I**	**10**
												133193	**QS-1/4-6-I-100**	**100**
	8	6.3	13.7	13.8	25.1	11	19.1	18.2	–	6	13	★ **153016**	**QS-1/4-8-I**	**10**
												133190	**QS-1/4-8-I-50**	**50**
	10	6.3	17.5	16.8	29.8	11	23.8	20.7	–	6	20	★ **153018**	**QS-1/4-10-I**	**10**
												133188	**QS-1/4-10-I-50**	**50**
	12	6.3	20.8	19.8	35.9	11	29.9	23.3	–	6	29	★ **190649**	**QS-1/4-12-I**	**10**
R3/8	8	6.3	16.8	13.8	22.2	12	15.9	18.2	–	6	19	★ **153017**	**QS-3/8-8-I**	**10**
	10	6.3	17.5	16.8	29.3	12	23	20.7	–	6	26	★ **153019**	**QS-3/8-10-I**	**10**
	12	8.4	20.8	19.8	31.9	12	25.6	23.3	–	8	31	★ **153020**	**QS-3/8-12-I**	**10**
R1/2	10	6.3	20.8	16.8	30.3	15	22.1	20.7	–	6	45	★ **190648**	**QS-1/2-10-I**	**1**
	12	8.4	20.8	19.8	33.9	15	25.7	23.3	–	8	45	★ **153021**	**QS-1/2-12-I**	**1**

1) Pack size

Datasheet

Push-in fitting QS-...-I
Male thread with internal hex



G thread

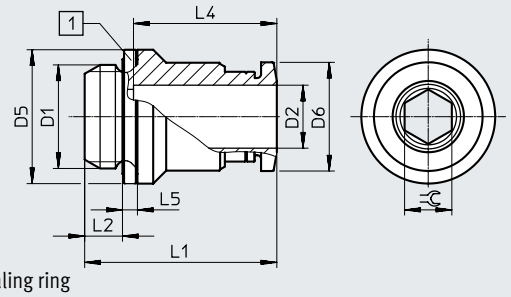

[1] Sealing ring

Dimensions and ordering data

Pneumatic connection		Nominal width	Dimensions [mm]								Weight/ piece	Part no.	Type	PS[1]
Male thread	For tubing O.D.		D5 ⌀	D6 ⌀	L1	L2	L3	L4	L5	⌀				
D1	D2	[mm]									[g]			
G thread with sealing ring														
G1/8	4	2.6	13	9.9	19.5	4.2	–	14.9	1.9	2.5	7.7	★ 186106	QS-G1/8-4-I	10
												133008	QS-G1/8-4-I-100	100
	6	4.2	13	11.8	21.6	4.2	–	17	1.9	4	8.3	★ 186107	QS-G1/8-6-I	10
												133009	QS-G1/8-6-I-100	100
	8	5.3	13.7	13.8	25.8	4.2	–	18.2	1.9	5	12	★ 186109	QS-G1/8-8-I	10
												133010	QS-G1/8-8-I-100	100
	10	5.3	17	16.8	28.3	4.2	–	20.7	1.9	5	19	★ 132999	QS-G1/8-10-I	10
												133000	QS-G1/8-10-I-100	100
G1/4	6	4.2	17	11.8	20.2	4.8	–	17	1.9	4	13	★ 186108	QS-G1/4-6-I	10
	8	6.3	17	13.8	24.4	4.8	–	18.2	1.9	6	14	★ 186110	QS-G1/4-8-I	10
	10	7.3	17	16.8	28.9	4.8	–	20.7	1.9	7	20	★ 186112	QS-G1/4-10-I	10
G3/8	8	6.3	19	13.8	23.9	5.8	–	18.2	2.4	6	20	★ 186111	QS-G3/8-8-I	10
	10	7.3	19	16.8	26.4	5.8	–	20.7	2.4	7	22	★ 186113	QS-G3/8-10-I	10
	12	8.4	20.8	19.8	31.5	5.8	–	23.3	2.4	8	34	★ 186114	QS-G3/8-12-I	10
G1/2	12	8.4	24	19.8	28	6.8	–	23.3	2.4	8	33	★ 186115	QS-G1/2-12-I	1

1) Pack size

Datasheet

Push-in fitting QSF
Female thread with external hex



G thread

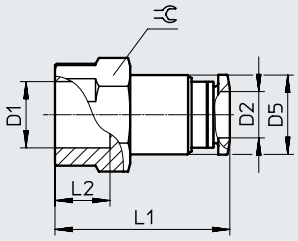

Dimensions and ordering data

Pneumatic connection		Nominal width	Dimensions [mm]				Weight/ piece	Part no.	Type	PS[1]
Female thread	For tubing O.D.		D5 ⌀	L1	L2	⌀				
D1	D2	[mm]					[g]			
G thread										
G1/8	4	3	9.7	23.9	7	14	13	★ **153022**	**QSF-1/8-4-B**	**10**
								130709	**QSF-1/8-4-B-100**	**100**
	6	5	11.8	26	7	14	15	★ **153023**	**QSF-1/8-6-B**	**10**
								130710	**QSF-1/8-6-B-100**	**100**
	8	7	13.7	27.2	7	14	16	★ **153025**	**QSF-1/8-8-B**	**10**
								130711	**QSF-1/8-8-B-50**	**50**
G1/4	4	3	9.7	26.9	9.5	17	21	★ **190650**	**QSF-1/4-4-B**	**10**
	6	5	11.8	29	9.5	17	23	★ **153024**	**QSF-1/4-6-B**	**10**
								130712	**QSF-1/4-6-B-100**	**100**
	8	7	13.7	30.2	9.5	17	24	★ **153026**	**QSF-1/4-8-B**	**10**
								130713	**QSF-1/4-8-B-50**	**50**
	10	9	17.5	32.7	9.5	17	30	★ **153028**	**QSF-1/4-10-B**	**10**
								130714	**QSF-1/4-10-B-50**	**50**
	12	11	20.8	34.8	9.5	21	44	★ **190651**	**QSF-1/4-12-B**	**10**
G3/8	6	5	11.8	30.5	11	21	30	★ **190652**	**QSF-3/8-6-B**	**10**
	8	7	13.7	31.7	11	21	32	★ **153027**	**QSF-3/8-8-B**	**10**
								130715	**QSF-3/8-8-B-50**	**50**
	10	9	17.5	34.2	11	21	38	★ **153029**	**QSF-3/8-10-B**	**10**
								130716	**QSF-3/8-10-B-50**	**50**
	12	11	20.8	36.8	11	21	46	★ **153030**	**QSF-3/8-12-B**	**10**
								130717	**QSF-3/8-12-B-20**	**20**
G1/2	12	11	20.8	40.1	14	24	56	★ **190653**	**QSF-1/2-12-B**	**1**
	16	15	25	41.6	14	25	69	**190654**	**QSF-1/2-16-B**	**1**

1) Pack size

Datasheet

Push-in connector QS



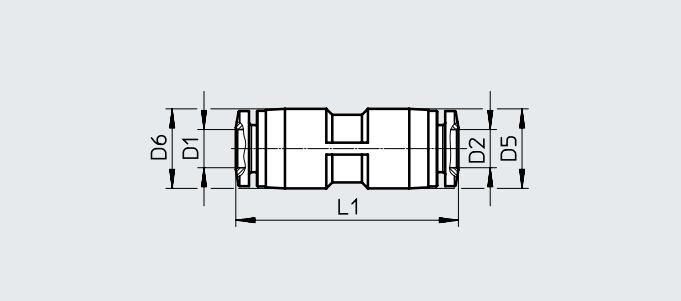

Dimensions and ordering data

Pneumatic connection		Nominal width	Dimensions [mm]			Weight/ piece	Part no.	Type	PS[1]
For tubing O.D. D1	For tubing O.D. D2	[mm]	D5 ⌀	D6	L1	[g]			
4	4	2.8	10	–	30.8	4.7	★ 153031	QS-4	10
							130686	QS-4-100	100
6	6	4.3	12.5	–	34.9	6.5	★ 153032	QS-6	10
							130687	QS-6-100	100
8	8	7	14.5	–	37.8	9.4	★ 153033	QS-8	10
							130688	QS-8-50	50
10	10	9	17.5	–	41.4	16	★ 153034	QS-10	10
							130689	QS-10-50	50
12	12	11	21	–	47.8	22	★ 153035	QS-12	10
							130690	QS-12-20	20
16	16	13	25	–	50	26	153036	QS-16	1
							133195	QS-16-20	20
Reducing									
6	4	2.8	12.5	12.5	34.4	6.4	★ 153037	QS-6-4	10
							130691	QS-6-4-100	100
8	4	2.8	10.7	14.5	36.6	7.2	★ 130606	QS-8-4	10
	6	4.3	14.5	14.5	37.9	8.8	★ 153038	QS-8-6	10
							130692	QS-8-6-50	50
10	6	4.3	13	17.5	39.8	12	★ 130607	QS-10-6	10
	8	6.5	17.5	17.5	41.1	14	★ 153039	QS-10-8	10
							130693	QS-10-8-50	50
12	8	6.2	14.5	21	44	16	★ 130608	QS-12-8	10
	10	9	21	21	47.6	21	★ 153040	QS-12-10	10
							130694	QS-12-10-20	20

1) Pack size

Datasheet

Push-in bulkhead connector QSS



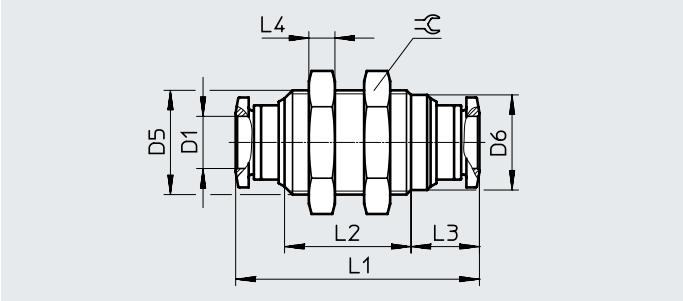

Push-in bulkhead connector QSS-...-F
With fixed collar



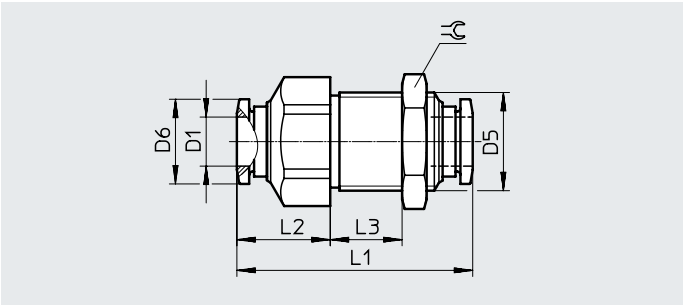

Dimensions and ordering data

Pneumatic connection For tubing O.D. D1	Nominal width [mm]	Dimensions [mm] D5	D6 ø	L1	L2	L3	L4	⫷⫸	Weight/ piece [g]	Part no.	Type	PS[1]
4	3	M12x1	10.8	30.8	14.8	9.5	4	14	11	★ **153157**	**QSS-4**	**10**
										130788	**QSS-4-100**	**100**
6	5	M14x1	12.5	34.9	19	9.5	4	17	16	★ **153158**	**QSS-6**	**10**
										130789	**QSS-6-100**	**100**
8	7	M16x1	14.6	37.4	19.4	10.5	4	19	19	★ **153159**	**QSS-8**	**10**
										130790	**QSS-8-50**	**50**
10	9	M20x1	18.5	42.4	21.6	11.9	5	24	35	★ **153160**	**QSS-10**	**10**
										130791	**QSS-10-50**	**50**
12	11	M22x1	20.4	47.6	24.2	13.2	6	27	52	★ **153161**	**QSS-12**	**10**
										130792	**QSS-12-20**	**20**
With fixed collar												
4	2.6	M12x1	9.9	33	13	Max. 10	–	14	–	**193950**	**QSS-4-F**	**10**
6	4	M14x1	11.8	34.9	14.4	Max. 10	–	17	–	**193951**	**QSS-6-F**	**10**
8	5.5	M16x1	13.8	38.4	15.2	Max. 13	–	19	40	★ **130642**	**QSS-8-F**	**10**
10	6.5	M20x1	16.8	47.1	20.3	Max. 15	–	24	86	★ **130643**	**QSS-10-F**	**10**
12	7.5	M22x1	19.8	48.5	18.9	Max. 17.5	–	27	105	★ **130644**	**QSS-12-F**	**10**

1) Pack size

Datasheet

Bulkhead push-in fitting QSSF
Via female thread



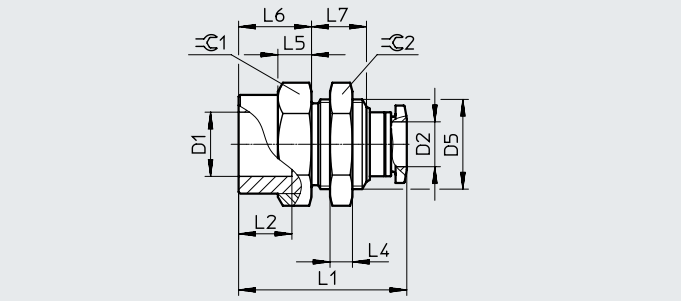

Dimensions and ordering data

Pneumatic connection		Nominal width	Dimensions [mm]									Weight/ piece	Part no.	Type	PS[1]
Female thread	For tubing O.D.		D5 ⌀	L1	L2	L4	L5	L6	L7	⊂1	⊂2				
D1	D2	[mm]										[g]			
G1/8	4	3	M12x1	24.2	7	4	5	9	9	14	14	17	**153162**	**QSSF-1/8-4-B**	**10**
	6	5	M14x1	26.4	7	4	6	10	10.2	17	17	25	**153163**	**QSSF-1/8-6-B**	**10**
	8	7	M16x1	27	7	4	6	10	9.8	19	19	30	**153165**	**QSSF-1/8-8-B**	**10**
G1/4	4	3	M12x1	27.5	9.5	4	6	12.3	9	17	14	24	**190655**	**QSSF-1/4-4-B**	**10**
	6	5	M14x1	28.7	9.5	4	6	12.3	10.2	17	17	27	**153164**	**QSSF-1/4-6-B**	**10**
	8	7	M16x1	30	9.5	4	6	13	9.8	19	19	34	**153166**	**QSSF-1/4-8-B**	**10**
	10	9	M20x1	32.7	9.5	5	7	13	11.1	24	24	57	**153168**	**QSSF-1/4-10-B**	**10**
G3/8	6	5	M14x1	30.9	11	4	6.5	14.5	10.2	21	17	36	**190656**	**QSSF-3/8-6-B**	**10**
	8	7	M16x1	31.5	11	4	6.5	14.5	9.8	21	19	38	**153167**	**QSSF-3/8-8-B**	**10**
	10	9	M20x1	34.2	11	5	7	14.5	11.1	24	24	57	**153169**	**QSSF-3/8-10-B**	**10**
	12	11	M22x1	36.8	11	6	7	14.5	12.4	24	27	66	**153170**	**QSSF-3/8-12-B**	**10**
G1/2	12	11	M22x1	40.1	14	6	7	17.8	12.4	24	27	70	**153171**	**QSSF-1/2-12-B**	**1**
	16	15	M27x1.5	42.6	14	9	8.5	17.3	15.4	29	32	116	**190657**	**QSSF-1/2-16-B**	**1**

1) Pack size

Datasheet

Push-in cap QSC



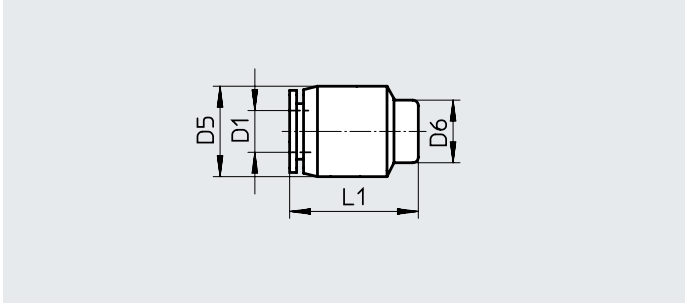

Dimensions and ordering data

Pneumatic connection	Dimensions [mm]			Weight/ piece	Part no.	Type	PS[1]
For tubing O.D. D1	D5 Ø	D6 Ø	L1	[g]			
4	10	7	16.5	2.5	★ 153262	QSC-4	10
					130704	QSC-4-100	100
6	13	9	18.5	3.5	★ 153263	QSC-6	10
					130705	QSC-6-100	100
8	15	11	20	5	★ 153264	QSC-8	10
					130706	QSC-8-50	50
10	18	13	22.5	8	★ 153265	QSC-10	10
					130707	QSC-10-50	50
12	21.5	16	23	11.5	★ 153266	QSC-12	10
					130708	QSC-12-20	20

1) Pack size

Datasheet

Push-in connector QS-...H
With push-in sleeve



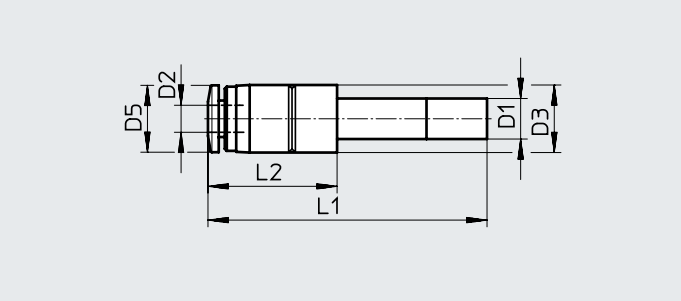

Dimensions and ordering data

Pneumatic connection		Nominal width	Dimensions [mm]				Weight/ piece	Part no.	Type	PS[1]
Push-in sleeve D1	For tubing O.D. D2	[mm]	D3 Ø	D5 Ø	L1	L2	[g]			
QS-6	4	2.5	10	9.9	37.7	15.2	2.9	★ 153041	QS-6H-4	10
								130695	QS-6H-4-100	100
QS-8	4	2.4	12.5	9.9	40.2	16.7	3.8	★ 130622	QS-8H-4	10
	6	3.8	12.5	11.8	40.8	17.3	4	★ 153042	QS-8H-6	10
								130696	QS-8H-6-50	50
QS-10	6	3.8	12.5	11.8	43.8	18.8	4.5	★ 130623	QS-10H-6	10
	8	5.4	14.5	13.8	43.7	18.7	5.8	★ 153043	QS-10H-8	10
								130697	QS-10H-8-50	50
QS-12	6	3.8	14.5	11.8	48.8	19.8	6	★ 132981	QS-12H-6	10
	8	5.4	14.5	13.8	49.7	20.7	6.7	★ 130624	QS-12H-8	10
	10	6.3	17.5	16.8	50	21	9.6	★ 153044	QS-12H-10	10
								130698	QS-12H-10-20	20

1) Pack size

Datasheet

Push-in sleeve QSH



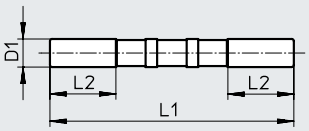



Reducing

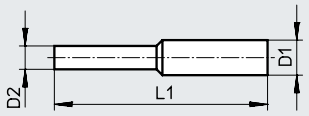

Dimensions and ordering data

Pneumatic connection		Nominal width	Dimensions [mm]		Weight/ piece	Part no.	Type	PS[1]
Push-in sleeve D1	Push-in sleeve D2	[mm]	L1	L2	[g]			
QS-4	–	2.5	34.8	11.3	0.5	**153251**	**QSH-4**	**10**
						130723	**QSH-4-100**	**100**
QS-6	–	4	38.2	11.3	0.5	**153252**	**QSH-6**	**10**
						130724	**QSH-6-100**	**100**
QS-8	–	6	41.4	12.1	1	**153253**	**QSH-8**	**10**
						130725	**QSH-8-50**	**50**
QS-10	–	7.5	46.2	13	1.5	**153254**	**QSH-10**	**10**
						130726	**QSH-10-50**	**50**
QS-12	–	9	52.8	17.5	3	**153255**	**QSH-12**	**10**
						130727	**QSH-12-20**	**20**
QS-16	–	11	55.6	18	4	**153256**	**QSH-16**	**1**
Reducing								
QS-6	QS-4	2.3	36.7	–	0.5	**153257**	**QSH-6-4**	**10**
						130718	**QSH-6-4-100**	**100**
QS-8	QS-4	2.3	41.1	–	0.9	**130625**	**QSH-8-4**	**10**
	QS-6	3.8	40.5	–	0.9	**153258**	**QSH-8-6**	**10**
						130719	**QSH-8-6-50**	**50**
QS-10	QS-6	3.8	43.7	–	1.4	**130626**	**QSH-10-6**	**10**
	QS-8	4.9	44	–	1.3	**153259**	**QSH-10-8**	**10**
						130720	**QSH-10-8-50**	**50**
QS-12	QS-8	4.9	47.5	–	2.1	**130627**	**QSH-12-8**	**10**
	QS-10	7.1	49.6	–	2.2	**153260**	**QSH-12-10**	**10**
						130721	**QSH-12-10-20**	**20**
QS-16	QS-12	7.8	54.4	–	4.2	**153261**	**QSH-16-12**	**1**
						130722	**QSH-16-12-20**	**20**

1) Pack size

Datasheet

Blanking plug QSC-...H



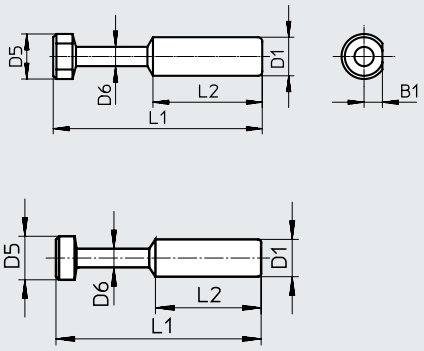

QSC-4H

QSC-6H
QSC-8H
QSC-10H
QSC-12H
QSC-16H

Dimensions and ordering data

Pneumatic connection	Dimensions [mm]					Weight/ piece	Part no.	Type	PS[1]
Push-in sleeve D1	B1	D5 Ø	D6 Ø	L1	L2	[g]			
QS-4	2.1	5	3	28	15	0.5	★ **153267**	**QSC-4H**	**10**
							130699	**QSC-4H-100**	**100**
QS-6	–	7	3	33	17	0.5	★ **153268**	**QSC-6H**	**10**
							130700	**QSC-6H-100**	**100**
QS-8	–	9	4	37	18	1	★ **153269**	**QSC-8H**	**10**
							130701	**QSC-8H-50**	**50**
QS-10	–	11	5	42	20.5	2	★ **153270**	**QSC-10H**	**10**
							130702	**QSC-10H-50**	**50**
QS-12	–	13	6	44	23	2.5	★ **153271**	**QSC-12H**	**10**
							130703	**QSC-12H-20**	**20**
QS-16	–	17	8	46	24	4	**153272**	**QSC-16H**	**1**

1) Pack size

Datasheet

Push-in L-fitting QSL
Male thread with external hex, rotatable


R thread

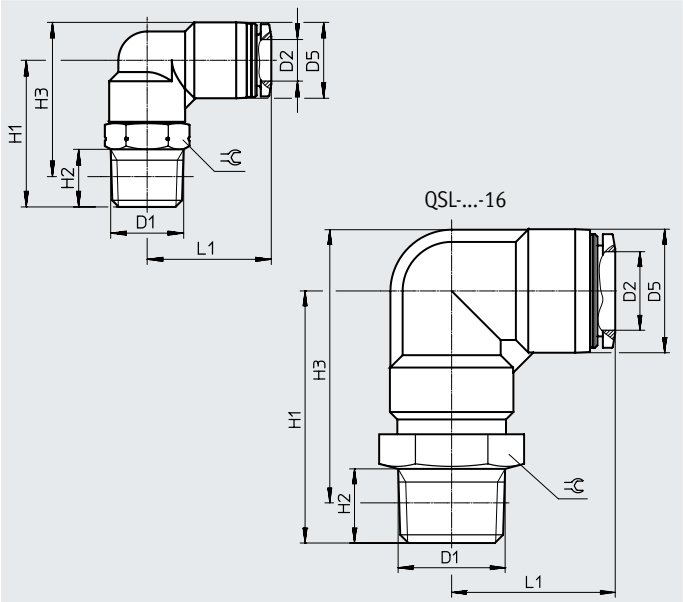

Dimensions and ordering data

Pneumatic connection		Nominal width	Dimensions [mm]						Weight/ piece	Part no.	Type	PS[1]
Male thread D1	For tubing O.D. D2	[mm]	D5 Ø	H1	H2	H3	L1	⌀	[g]			
R thread												
R1/8	4	2.8	10	22	8	23	18.7	10	10	★ 153045	QSL-1/8-4	10
										130728	QSL-1/8-4-100	100
	6	4.2	12.5	22.5	8	24.8	20.3	10	11	★ 153046	QSL-1/8-6	10
										130729	QSL-1/8-6-100	100
	8	6	14.5	24	8	27.3	22.7	12	14	★ 153048	QSL-1/8-8	10
										130730	QSL-1/8-8-50	50
	10	6	17.5	25	8	29.8	25.5	12	18	★ 190658	QSL-1/8-10	10
R1/4	4	2.8	10	29	11	28	20.7	14	18	★ 190659	QSL-1/4-4	10
	6	4.3	12.5	28	11	28.2	21.8	14	19	★ 153047	QSL-1/4-6	10
										130731	QSL-1/4-6-100	100
	8	6.7	14.5	28	11	29.2	23.7	14	20	★ 153049	QSL-1/4-8	10
										130732	QSL-1/4-8-50	50
	10	8	17.5	28.5	11	31.2	26	14	23	★ 153051	QSL-1/4-10	10
										130733	QSL-1/4-10-50	50
	12	8	21	29.8	11	34.2	29	14	27	★ 164981	QSL-1/4-12	10
										130734	QSL-1/4-12-20	20
R3/8	6	4.3	12.5	31.5	12	31.4	23.8	17	30	★ 190660	QSL-3/8-6	10
	8	6.7	14.5	31	12	31.9	24.7	17	31	★ 153050	QSL-3/8-8	10
										130735	QSL-3/8-8-50	50
	10	8.3	17.5	32	12	34.4	27	17	34	★ 153052	QSL-3/8-10	10
										130736	QSL-3/8-10-20	20
	12	10	21	32.5	12	36.7	29.7	17	38	★ 153053	QSL-3/8-12	10
										130737	QSL-3/8-12-20	20
	16	11	25	47	11	53.2	33.1	22	74	164958	QSL-3/8-16	1
R1/2	10	8.3	17.5	36	15	36.6	27.5	21	57	★ 190661	QSL-1/2-10	1
										133192	QSL-1/2-10-50	50
	12	10.3	21	36.5	15	38.8	30.7	21	61	★ 153054	QSL-1/2-12	1
										130738	QSL-1/2-12-20	20
	16	13	25	51	15	55.3	33.1	22	79	153055	QSL-1/2-16	1
										130739	QSL-1/2-16-20	20

1) Pack size

Datasheet

Push-in L-fitting QSL
Male thread with external hex, rotatable



G thread

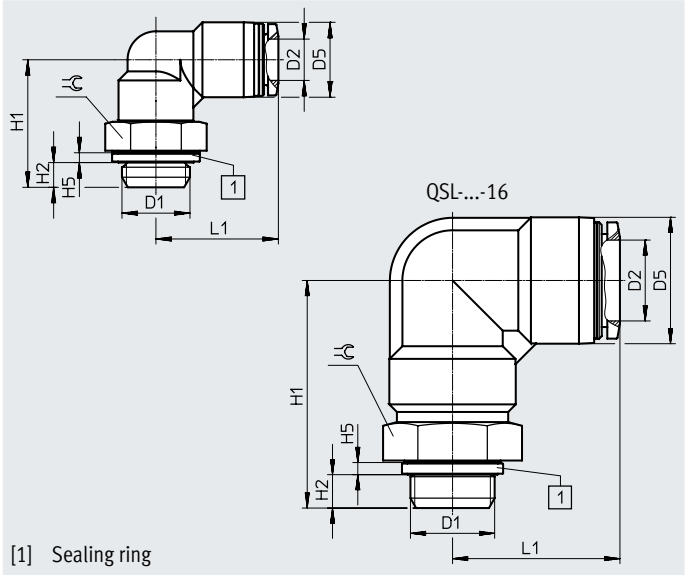

[1] Sealing ring

Dimensions and ordering data

Pneumatic connection		Nominal width	Dimensions [mm]						Weight/ piece	Part no.	Type	PS[1]
Male thread	For tubing O.D.		D5 ⌀	H1	H2	H5	L1	⌀				
D1	D2	[mm]							[g]			
G thread with sealing ring												
G1/8	4	2.8	10	21.1	4.2	1.9	18.7	13	13	★ 186116	QSL-G1/8-4	10
										132048	QSL-G1/8-4-100	100
	6	4.2	12.5	21.6	4.2	1.9	20.3	13	14	★ 186117	QSL-G1/8-6	10
										132049	QSL-G1/8-6-100	100
	8	6	14.5	22.1	4.2	1.9	22.7	13	15	★ 186119	QSL-G1/8-8	10
										132050	QSL-G1/8-8-50	50
G1/4	6	4.3	12.5	24.7	4.8	1.9	21.8	17	21	★ 186118	QSL-G1/4-6	10
										132051	QSL-G1/4-6-100	100
	8	6.7	14.5	24.7	4.8	1.9	23.7	17	23	★ 186120	QSL-G1/4-8	10
										132052	QSL-G1/4-8-50	50
	10	8	17.5	25.2	4.8	1.9	26	17	26	★ 186122	QSL-G1/4-10	10
										132053	QSL-G1/4-10-50	50
	12	8	21	26.5	4.8	1.9	29	17	29	★ 186351	QSL-G1/4-12	10
										132054	QSL-G1/4-12-20	20
G3/8	8	6.7	14.5	27.2	5.8	2.4	24.7	19	30	★ 186121	QSL-G3/8-8	10
										132055	QSL-G3/8-8-50	50
	10	8.3	17.5	28.2	5.8	2.4	27	19	33	★ 186123	QSL-G3/8-10	10
										132056	QSL-G3/8-10-20	20
	12	10	21	28.7	5.8	2.4	29.7	19	37	★ 186124	QSL-G3/8-12	10
										132057	QSL-G3/8-12-20	20
	16	11	25	44.2	5.8	2.4	33.1	24	77	186348	QSL-G3/8-16	1
G1/2	12	10.3	21	32.2	6.8	2.4	30.7	24	67	★ 186125	QSL-G1/2-12	1
										132058	QSL-G1/2-12-20	20
	16	13	25	45.2	6.8	2.4	33.1	24	75	186126	QSL-G1/2-16	1
										132059	QSL-G1/2-16-20	20

1) Pack size

Datasheet

Push-in L-fitting, long QSLL
Male thread with external hex, rotatable



R thread

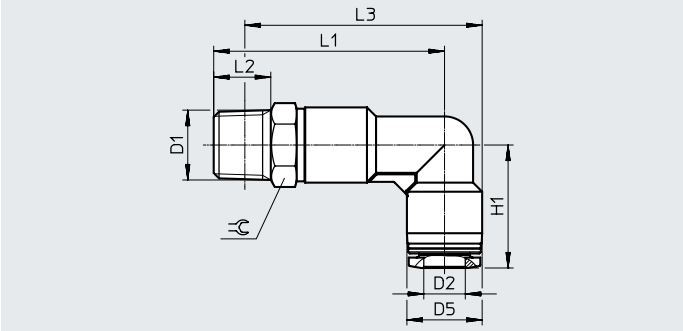

Dimensions and ordering data

Pneumatic connection		Nominal width	Dimensions [mm]						Weight/ piece	Part no.	Type	PS[1]
Male thread	For tubing O.D.		D5 ⌀	H1	L1	L2	L3	⌀				
D1	D2	[mm]							[g]			
R thread												
R1/8	4	2.8	10	18.7	34	8	35	10	11	★ **153076**	**QSLL-1/8-4**	**10**
	6	4.3	12.5	20.3	37	8	39.3	10	13	★ **153077**	**QSLL-1/8-6**	**10**
	8	6	14.5	22.7	40.5	8	43.8	12	16	★ **153079**	**QSLL-1/8-8**	**10**
R1/4	4	2.8	10	20.7	41	11	40	14	19	★ **190662**	**QSLL-1/4-4**	**10**
	6	4.3	12.5	21.8	42.5	11	42.7	14	20	★ **153078**	**QSLL-1/4-6**	**10**
	8	6.7	14.5	23.7	44.5	11	45.7	14	22	★ **153080**	**QSLL-1/4-8**	**10**
	10	8	17.5	26	48	11	50.7	14	26	★ **153082**	**QSLL-1/4-10**	**10**
R3/8	6	4.3	12.5	23.8	46	12	45.9	17	33	★ **190663**	**QSLL-3/8-6**	**10**
	8	6.7	14.5	24.7	47.5	12	48.4	17	35	★ **153081**	**QSLL-3/8-8**	**10**
	10	8.3	17.5	27	51.5	12	53.9	17	38	★ **153083**	**QSLL-3/8-10**	**10**
	12	10	21	29.7	55.5	12	59.7	17	42	★ **153084**	**QSLL-3/8-12**	**10**
R1/2	10	8.3	17.5	27	55.5	15	56.1	21	63	★ **190664**	**QSLL-1/2-10**	**1**
	12	10.3	21	29.7	59.5	15	61.8	21	68	★ **153085**	**QSLL-1/2-12**	**1**

1) Pack size

Datasheet

Push-in L-fitting, long QSLL
Male thread with external hex, rotatable

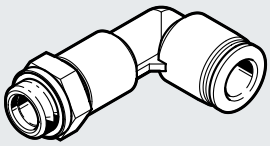

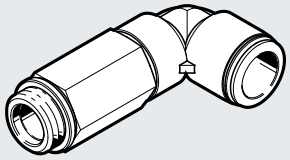

QSLL-G1/2-16

G thread

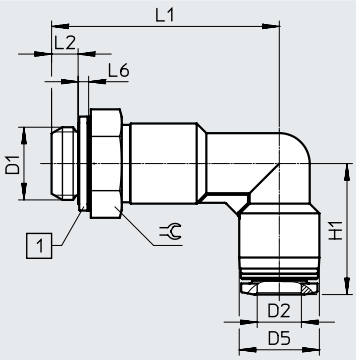

QSLL-G1/2-16

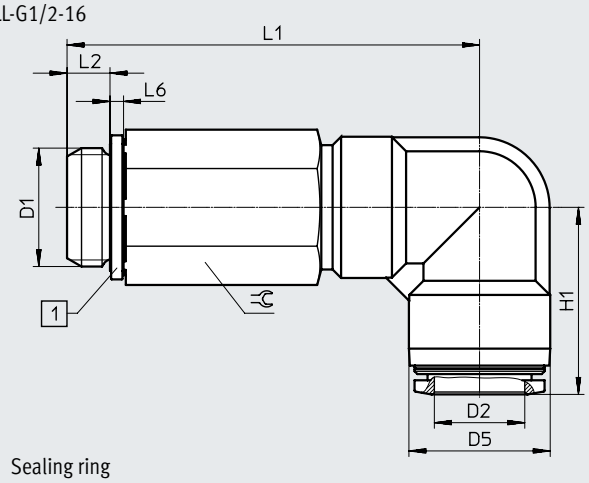

[1] Sealing ring

Dimensions and ordering data

Pneumatic connection		Nominal width	Dimensions [mm]						Weight/ piece	Part no.	Type	PS[1]
Male thread D1	For tubing O.D. D2	[mm]	D5 ø	H1	L1	L2	L6	⫧	[g]			
G thread with sealing ring												
G1/8	4	2.8	10	18.7	33.1	4.2	1.9	13	14	**186127**	**QSLL-G1/8-4**	**10**
										133015	**QSLL-G1/8-4-100**	**100**
	6	4.3	12.5	20.3	36.1	4.2	1.9	13	15	**186128**	**QSLL-G1/8-6**	**10**
										133016	**QSLL-G1/8-6-100**	**100**
	8	6	14.5	22.7	38.6	4.2	1.9	13	17	**186130**	**QSLL-G1/8-8**	**10**
										133017	**QSLL-G1/8-8-100**	**100**
G1/4	6	4.3	12.5	21.8	39.2	4.8	1.9	17	25	**186129**	**QSLL-G1/4-6**	**10**
	8	6.7	14.5	23.7	41.2	4.8	1.9	17	27	**186131**	**QSLL-G1/4-8**	**10**
	10	8	17.5	26	44.7	4.8	1.9	17	31	**186133**	**QSLL-G1/4-10**	**10**
	12	8	21	29	49.5	4.8	1.9	17	35	**132596**	**QSLL-G1/4-12**	**1**
G3/8	8	6.7	14.5	24.7	43.7	5.8	2.4	19	34	**186132**	**QSLL-G3/8-8**	**10**
	10	8.3	17.5	27	47.7	5.8	2.4	19	37	**186134**	**QSLL-G3/8-10**	**10**
	12	10	21	29.7	51.7	5.8	2.4	19	41	**186135**	**QSLL-G3/8-12**	**10**
G1/2	12	10.3	21	29.7	55.2	6.8	2.4	24	75	**186136**	**QSLL-G1/2-12**	**1**
	16	13	25	33.1	72.2	6.8	2.4	24	158	**190665**	**QSLL-G1/2-16**	**1**

1) Pack size

Datasheet

Push-in L-fitting QSLF
Female thread with external hex, rotatable



G thread

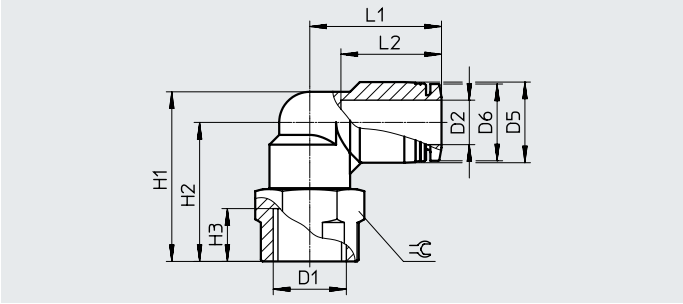

Dimensions and ordering data

Pneumatic connection		Nominal width	Dimensions [mm]								Weight/ piece	Part no.	Type	PS[1]
Female thread D1	For tubing O.D. D2	[mm]	D5 ⌀	D6 ⌀	H1	H2	H3	L1	L2	⌀	[g]			
G thread														
G1/8	4	2.8	10	9.9	25	20	7	18.7	14.9	14	14	★ **153273**	**QSLF-1/8-4-B**	**10**
	6	4.2	12.5	11.8	26.8	20.5	7	20.3	17	14	15	★ **153274**	**QSLF-1/8-6-B**	**10**
	8	6	14.5	13.8	28.3	21	7	22.7	18.1	14	16	★ **153276**	**QSLF-1/8-8-B**	**10**
G1/4	6	4.3	12.5	11.8	31.3	25	9.5	21.8	17	17	22	★ **153275**	**QSLF-1/4-6-B**	**10**
	8	6.7	14.5	13.8	32.3	25	9.5	23.7	18.1	17	24	★ **153277**	**QSLF-1/4-8-B**	**10**
	10	8	17.5	16.8	34.3	25.5	9.5	26	20.2	17	27	★ **153279**	**QSLF-1/4-10-B**	**10**
G3/8	8	6.7	14.5	13.8	34.8	27.5	11	24.7	18.1	21	33	★ **153278**	**QSLF-3/8-8-B**	**10**
	10	8.3	17.5	16.8	37.3	28.5	11	27	20.2	21	36	★ **153280**	**QSLF-3/8-10-B**	**10**

1) Pack size

Datasheet

Push-in L-fitting QSLV-...-I
Male thread with internal hexagon, rotatable


R thread

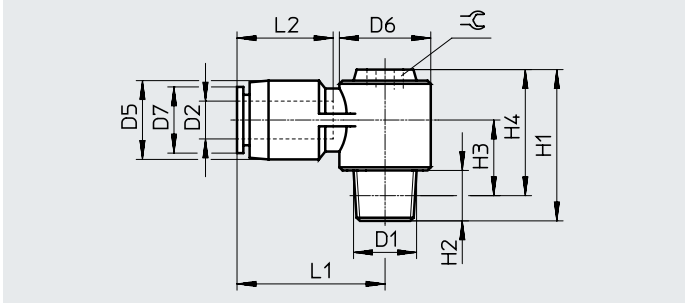


G thread

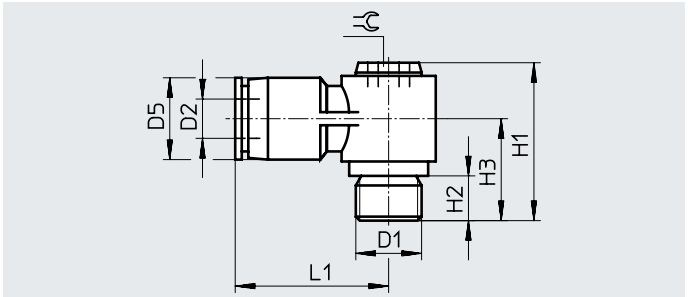

Dimensions and ordering data

Pneumatic connection		Nominal width	Dimensions [mm]										Weight/piece	Part no.	Type	PS[1]
Male thread	For tubing O.D.		D5 ⌀	D6 ⌀	D7 ⌀	H1	H2	H3	H4	L1	L2	⌀				
D1	D2	[mm]											[g]			
R thread																
R1/8	6	3	13	14.3	11.8	24	8	11.5	20	23.7	17	5	15	**153097**	**QSLV-1/8-6-I**	**10**
	8	4.2	14	17.9	13.8	27	8	12	23	26.7	18.1	8	22	**153099**	**QSLV-1/8-8-I**	**10**
R1/4	6	3.1	13	14.3	11.8	27	11	12.5	21	23.7	17	5	22	**153098**	**QSLV-1/4-6-I**	**10**
	8	4	14	17.9	13.8	30	11	13	24	26.7	18.1	8	28	**153100**	**QSLV-1/4-8-I**	**10**
	10	5.4	18	21.3	16.8	34	11	15	28	30.7	20.7	10	40	**153102**	**QSLV-1/4-10-I**	**10**
R3/8	8	4.2	14	17.9	13.8	31	12	13.7	24.7	26.7	18.1	8	37	**153101**	**QSLV-3/8-8-I**	**10**
	10	5.4	18	21.3	16.8	35	12	15.7	28.7	30.7	20.7	10	49	**153103**	**QSLV-3/8-10-I**	**10**
	12	6.9	21	26.3	19.8	39	12	17.7	32.7	36.4	23.4	12	68	**153104**	**QSLV-3/8-12-I**	**10**
R1/2	12	6.4	21	26.3	19.8	42	15	18.8	33.8	36.4	23.4	12	85	**153105**	**QSLV-1/2-12-I**	**1**
G thread																
G1/8	6	3	13	–	–	23	5.1	14.5	–	23.7	–	5	15	**186148**	**QSLV-G1/8-6-I**	**10**
	8	4.2	14	–	–	26	5.1	15	–	26.7	–	8	22	**186150**	**QSLV-G1/8-8-I**	**10**
G1/4	6	3.1	13	–	–	23.5	5.6	15	–	23.7	–	5	19	**186149**	**QSLV-G1/4-6-I**	**10**
	8	4	14	–	–	26.5	5.6	15.5	–	26.7	–	8	25	**186151**	**QSLV-G1/4-8-I**	**10**
	10	5.4	18	–	–	30.5	5.6	17.5	–	30.7	–	10	38	**186153**	**QSLV-G1/4-10-I**	**10**
G3/8	8	4.2	14	–	–	28	6.6	17	–	26.7	–	8	33	**186152**	**QSLV-G3/8-8-I**	**10**
	10	5.4	18	–	–	32	6.6	19	–	30.7	–	10	45	**186154**	**QSLV-G3/8-10-I**	**10**
	12	6.9	21	–	–	36	6.6	21	–	36.4	–	12	65	**186155**	**QSLV-G3/8-12-I**	**10**
G1/2	12	6.4	21	–	–	37	7.6	22	–	36.4	–	12	75	**186156**	**QSLV-G1/2-12-I**	**1**

1) Pack size

Datasheet

Push-in L-fitting QSLV
Male thread with external hex, rotatable



M thread

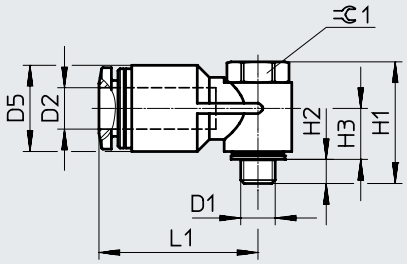



R thread

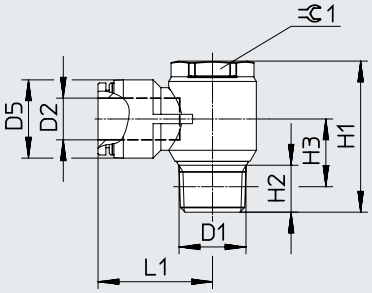

Dimensions and ordering data

Pneumatic connection		Nominal width	Dimensions [mm]						Weight/ piece	Part no.	Type	PS[1]
Male thread D1	For tubing O.D. D2	[mm]	D5 Ø	H1	H2	H3	L1	⫷1	[g]			
Metric thread with sealing ring												
M5	6	1.8	12.5	17.2	3	7.4	23.1	8	8.3	★ **190666**	**QSLV-M5-6**	**10**
R thread												
R1/8	4	2.8	10	27	8	12	22.2	14	21	★ **153086**	**QSLV-1/8-4**	**10**
										130749	**QSLV-1/8-4-100**	**100**
	6	4.6	12.5	27	8	12	24.2	14	22	★ **153087**	**QSLV-1/8-6**	**10**
										130750	**QSLV-1/8-6-100**	**100**
	8	5.5	14.5	27	8	12.3	26.2	14	23	★ **153089**	**QSLV-1/8-8**	**10**
										130751	**QSLV-1/8-8-50**	**50**
R1/4	6	4.3	12.5	31.5	11	13.5	26.8	17	36	★ **153088**	**QSLV-1/4-6**	**10**
										130752	**QSLV-1/4-6-100**	**100**
	8	6	14.5	31.5	11	13.5	28.2	17	38	★ **153090**	**QSLV-1/4-8**	**10**
										130753	**QSLV-1/4-8-50**	**50**
	10	7.1	17.5	31.5	11	15	30.5	17	41	★ **153092**	**QSLV-1/4-10**	**10**
										130754	**QSLV-1/4-10-50**	**50**
R3/8	8	6	14.5	36	12	15.7	30.2	21	60	★ **153091**	**QSLV-3/8-8**	**10**
	10	8	18	36	12	15.7	32.5	21	63	★ **153093**	**QSLV-3/8-10**	**10**
	12	9.3	21	36	12	17.2	35.2	21	66	★ **153094**	**QSLV-3/8-12**	**10**
R1/2	12	10	21	40.2	13	16.5	38.2	24	97	★ **153095**	**QSLV-1/2-12**	**1**
	16	13	25	48.3	15	21.6	36.6	24	105	**153096**	**QSLV-1/2-16**	**1**

1) Pack size

Datasheet

Push-in L-fitting QSLV
Male thread with external hex, rotatable



G thread

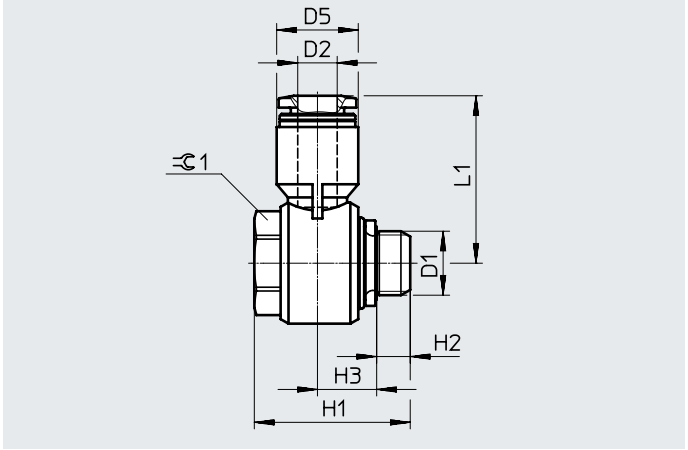

Dimensions and ordering data

Pneumatic connection		Nominal width	Dimensions [mm]						Weight/ piece	Part no.	Type	PS[1]
Male thread	For tubing O.D.		D5 ø	H1	H2	H3	L1	1				
D1	D2	[mm]							[g]			
G thread with sealing ring												
G1/8	4	3	10	23.7	5.1	8.7	23.4	14	22	★ 186137	QSLV-G1/8-4	10
										132060	QSLV-G1/8-4-100	100
	6	4	12.4	23.7	5.1	9	25.5	14	23	★ 186138	QSLV-G1/8-6	10
										132061	QSLV-G1/8-6-100	100
	8	5.6	14.4	23.7	5.1	10	28.4	14	25	★ 186140	QSLV-G1/8-8	10
										132062	QSLV-G1/8-8-50	50
G1/4	6	5	14.5	28.6	5.6	10.4	29	19	44	★ 186139	QSLV-G1/4-6	10
										132063	QSLV-G1/4-6-100	100
	8	6	14.5	28.6	5.6	10.4	28.9	19	45	★ 186141	QSLV-G1/4-8	10
										132064	QSLV-G1/4-8-50	50
	10	7	17.6	28.6	5.6	11.7	31.2	19	48	★ 186143	QSLV-G1/4-10	10
										132065	QSLV-G1/4-10-50	50
G3/8	8	6	14.4	33.1	6.6	12.6	31	24	71	★ 186142	QSLV-G3/8-8	10
	10	8	17.6	33.1	6.6	12.6	33.6	24	74	★ 186144	QSLV-G3/8-10	10
	12	8.7	21	33.1	6.6	14.3	36.4	24	77	★ 186145	QSLV-G3/8-12	10
G1/2	12	8.7	21	34	7.6	14.3	37.9	27	99	★ 186146	QSLV-G1/2-12	1
	16	13	25	43.1	7.6	17.2	38.1	27	115	186147	QSLV-G1/2-16	1

1) Pack size

Datasheet

Push-in L-connector QSL



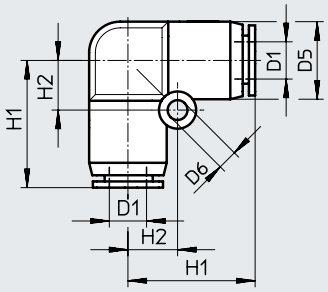

Dimensions and ordering data

Pneumatic connection	Nominal width	Dimensions [mm]				Weight/ piece	Part no.	Type	PS[1]
For tubing O.D.		D5 ⌀	D6 ⌀	H1	H2				
D1	[mm]					[g]			
4	2.8	10	3.2	16.9	6.5	5.1	★ **153070**	**QSL-4**	**10**
							130740	**QSL-4-100**	**100**
6	5	12.5	3.2	20.1	8	7.3	★ **153071**	**QSL-6**	**10**
							130741	**QSL-6-100**	**100**
8	7.2	15	4.2	22.4	10	11	★ **153072**	**QSL-8**	**10**
							130742	**QSL-8-50**	**50**
10	8.3	17.5	4.2	26.2	12	17	★ **153073**	**QSL-10**	**10**
							130743	**QSL-10-50**	**50**
12	10	21	4.2	29.4	14	25	★ **153074**	**QSL-12**	**10**
							130744	**QSL-12-20**	**20**
16	13	25	4.2	33.1	12	31	**153075**	**QSL-16**	**1**
							133194	**QSL-16-20**	**20**

1) Pack size

Datasheet

Push-in L-connector QSL-...H
With push-in sleeve



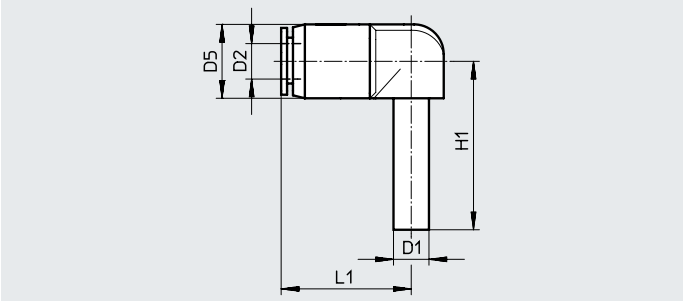



Long push-in sleeve

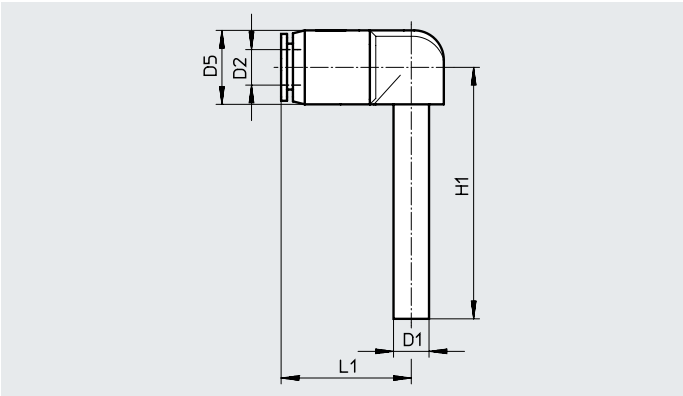

Dimensions and ordering data

Pneumatic connection		Nominal width	Dimensions [mm]			Weight/ piece	Part no.	Type	PS[1]
Push-in sleeve D1	For tubing O.D. D2	[mm]	D5 Ø	H1	L1	[g]			
QS-4	4	2	10	25	16.8	2.7	★ 153056	QSL-4H	10
							130745	QSL-4H-100	100
QS-6	6	3.2	12.5	28.5	19.8	3.9	★ 153057	QSL-6H	10
							130746	QSL-6H-100	100
QS-8	8	4.7	14.5	30.7	21.8	5.7	★ 153058	QSL-8H	10
							130747	QSL-8H-50	50
QS-10	10	5.7	17.5	33.7	24.9	9.6	★ 153059	QSL-10H	10
							130748	QSL-10H-50	50
QS-12	12	6.8	21	39	28.9	15	★ 153060	QSL-12H	10
Reducing									
QS-6	4	2.4	12.5	28.5	17.7	3.6	★ 153061	QSL-6H-4	10
QS-8	6	3.5	14.5	30.7	21.9	5.2	★ 153062	QSL-8H-6	10
QS-10	8	4.9	17.5	33.7	24.6	8	★ 153063	QSL-10H-8	10
QS-12	10	6.1	21	39	28.7	14	★ 153064	QSL-12H-10	10
Long push-in sleeve									
QS-4	4	2	10	36	16.8	2.8	★ 153065	QSL-4HL	10
QS-6	6	3.1	12.5	42	19.8	4.2	★ 153066	QSL-6HL	10
QS-8	8	4.5	14.5	46.7	21.8	6.2	★ 153067	QSL-8HL	10
QS-10	10	5.6	17.5	51.7	24.9	11	★ 153068	QSL-10HL	10
QS-12	12	6.7	21	59.5	28.95	16	★ 153069	QSL-12HL	10

1) Pack size

Datasheet

Push-in T-fitting QST
Male thread with external hex, rotatable

No. of supply lines: 1
No. of outlets: 2



R thread

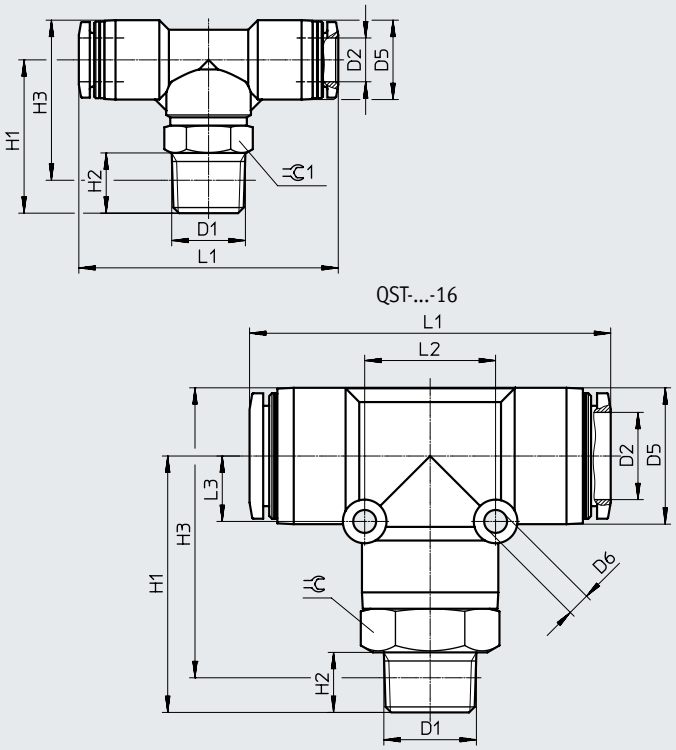

Dimensions and ordering data

Pneumatic connection		Nominal width	Dimensions [mm]									Weight/ piece	Part no.	Type	PS[1]
Male thread	For tubing O.D.		D5 ø	D6 ø	H1	H2	H3	L1	L2	L3	⌀				
D1	D2	[mm]										[g]			
R thread															
R1/8	4	2.8	10	–	22	8	23	37.4	–	–	10	13	★ 153106	QST-1/8-4	10
													130793	QST-1/8-4-100	100
	6	4.2	12.5	–	22.5	8	24.8	40.5	–	–	10	14	★ 153107	QST-1/8-6	10
													130794	QST-1/8-6-100	100
	8	6	14.5	–	24	8	27.3	45.4	–	–	12	19	★ 153109	QST-1/8-8	10
													130795	QST-1/8-8-50	50
	10	6	17.5	–	25	8	29.8	51	–	–	12	25	★ 190667	QST-1/8-10	10
R1/4	4	2.8	10	–	29	11	28	41.4	–	–	14	20	★ 190668	QST-1/4-4	10
	6	4.3	12.5	–	28	11	28.2	43.5	–	–	14	22	★ 153108	QST-1/4-6	10
													130796	QST-1/4-6-100	100
	8	6.7	14.5	–	28	11	29.2	47.4	–	–	14	25	★ 153110	QST-1/4-8	10
													130797	QST-1/4-8-50	50
	10	8	17.5	–	28.5	11	31.2	52	–	–	14	31	★ 153112	QST-1/4-10	10
													130798	QST-1/4-10-50	50
	12	8	21	–	29.8	11	34.2	57.9	–	–	14	38	★ 190669	QST-1/4-12	10
R3/8	6	4.3	12.5	–	31.5	12	31.4	47.5	–	–	17	33	★ 190670	QST-3/8-6	10
	8	6.7	14.5	–	31	12	31.9	49.4	–	–	17	35	★ 153111	QST-3/8-8	10
													130799	QST-3/8-8-50	50
	10	8.3	17.5	–	32	12	34.4	54	–	–	17	42	★ 153113	QST-3/8-10	10
													130800	QST-3/8-10-20	20
	12	10	21	–	32.5	12	36.7	59.4	–	–	17	48	★ 153114	QST-3/8-12	10
													130801	QST-3/8-12-20	20
	16	11	25	4.2	47	11	53.2	66.2	24	12	22	89	164959	QST-3/8-16	1
R1/2	10	8.3	17.5	–	36	15	36.6	55	–	–	21	65	★ 190672	QST-1/2-10	1
	12	10.3	21	–	36.5	15	38.8	61.4	–	–	21	72	★ 153115	QST-1/2-12	1
	16	13	25	4.2	51	15	55.3	66.2	24	12	22	93	153116	QST-1/2-16	1

1) Pack size

Datasheet

Push-in T-fitting QST
Male thread with external hex, rotatable

No. of supply lines: 1
No. of outlets: 2



G thread

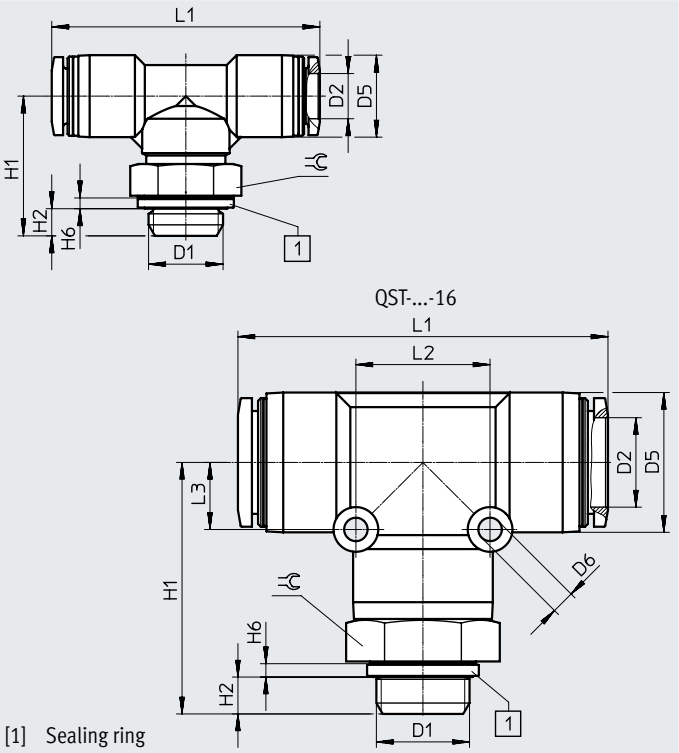

[1] Sealing ring

Dimensions and ordering data

Pneumatic connection		Nominal width	Dimensions [mm]									Weight/ piece	Part no.	Type	PS[1]
Male thread D1	For tubing O.D. D2	[mm]	D5 ø	D6 ø	H1	H2	H6	L1	L2	L3	⫰	[g]			
G thread with sealing ring															
G1/8	4	2.8	10	–	21.1	4.2	1.9	37.4	–	–	13	15	**186157**	**QST-G1/8-4**	**10**
													132066	**QST-G1/8-4-100**	**100**
	6	4.2	12.5	–	21.6	4.2	1.9	40.5	–	–	13	17	**186158**	**QST-G1/8-6**	**10**
													132067	**QST-G1/8-6-100**	**100**
	8	6	14.5	–	22.1	4.2	1.9	45.4	–	–	13	19	**186160**	**QST-G1/8-8**	**10**
													132068	**QST-G1/8-8-50**	**50**
G1/4	6	4.3	12.5	–	24.7	4.8	1.9	43.5	–	–	17	24	**186159**	**QST-G1/4-6**	**10**
													132069	**QST-G1/4-6-100**	**100**
	8	6.7	14.5	–	24.7	4.8	1.9	47.4	–	–	17	27	**186161**	**QST-G1/4-8**	**10**
													132070	**QST-G1/4-8-50**	**50**
	10	8	17.5	–	25.2	4.8	1.9	52	–	–	17	33	**186163**	**QST-G1/4-10**	**10**
													132071	**QST-G1/4-10-50**	**50**
	12	8	21	–	26.5	4.8	1.9	57.9	–	–	17	43	**132597**	**QST-G1/4-12**	**1**
G3/8	8	6.7	14.5	–	27.2	5.8	2.4	49.4	–	–	19	34	**186162**	**QST-G3/8-8**	**10**
													132072	**QST-G3/8-8-50**	**50**
	10	8.3	17.5	–	28.2	5.8	2.4	54	–	–	19	41	**186164**	**QST-G3/8-10**	**10**
													132073	**QST-G3/8-10-20**	**20**
	12	10	21	–	28.7	5.8	2.4	59.4	–	–	19	47	**186165**	**QST-G3/8-12**	**10**
													132074	**QST-G3/8-12-20**	**20**
	16	11	25	4.2	44.2	5.8	2.4	66.2	24	12	24	97	**186349**	**QST-G3/8-16**	**1**
G1/2	12	10.3	21	–	32.2	6.8	2.4	61.4	–	–	24	78	**186166**	**QST-G1/2-12**	**1**
	16	13	25	4.2	45.2	6.8	2.4	66.2	24	12	24	95	**186167**	**QST-G1/2-16**	**1**

1) Pack size

Datasheet

Push-in T-connector QST

No. of supply lines: 1
No. of outlets: 2



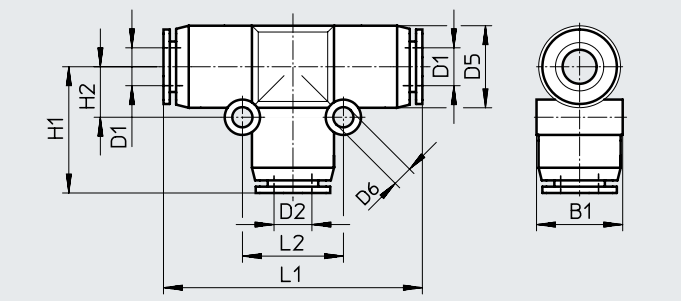

Dimensions and ordering data

Pneumatic connection		Nominal width	Dimensions [mm]							Weight/ piece	Part no.	Type	PS[1]
For tubing O.D. D1	For tubing O.D. D2	[mm]	D5 ø	D6 ø	B1	H1	H2	L1	L2	[g]			
4	4	2.8	10	3.2	10.4	17.2	6.5	34.4	13	7.5	★ 153128	QST-4	10
											130802	QST-4-100	100
6	6	4.8	13	3.2	13.5	20.1	8	40.2	16	11	★ 153129	QST-6	10
											130803	QST-6-100	100
8	8	6.2	15	3.2	15.6	22.2	9	44.4	18	16	★ 153130	QST-8	10
											130804	QST-8-50	50
10	10	8.1	17.5	4.2	18.2	25.2	12	50.4	24	25	★ 153131	QST-10	10
											130805	QST-10-50	50
12	12	10	21	4.2	21.7	28.4	14	56.8	28	36	★ 153132	QST-12	10
											130806	QST-12-20	20
16	16	13	25	4.2	25.6	33.1	12	66.2	24	44	153133	QST-16	1
Reducing													
6	4	2.3	13	3.2	13	19.5	8	40.1	16	11	★ 153134	QST-6-4	10
											130820	QST-6-4-100	100
8	4	2.3	14.5	3.2	15.1	21.7	9	44.4	18	14	★ 130613	QST-8-4	10
	6	3.5	14.5	3.2	15.1	22.3	9	44.4	18	14	★ 153135	QST-8-6	10
											130821	QST-8-6-50	50
10	6	3.7	17.5	4.2	18.2	25	12	50.4	24	22	★ 130614	QST-10-6	10
	8	4.9	17.5	4.2	18.2	24.9	12	50.4	24	23	★ 153136	QST-10-8	10
											130822	QST-10-8-50	50
12	8	5.1	21	4.2	21.7	27.7	14	56.8	28	32	★ 130615	QST-12-8	10
	10	6.1	21	4.2	21.7	28	14	56.8	28	34	★ 153137	QST-12-10	10
											130823	QST-12-10-20	20
16	12	7.6	25	4.2	25.7	33.2	12	66.2	24	45	★ 130616	QST-16-12	1

1) Pack size

Datasheet

Push-in T-fitting QSTF
Male and female thread with external hex, rotatable

No. of supply lines: 1
No. of outlets: 2


R thread

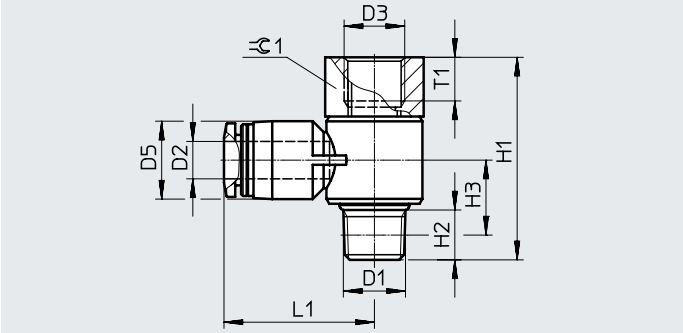


G thread

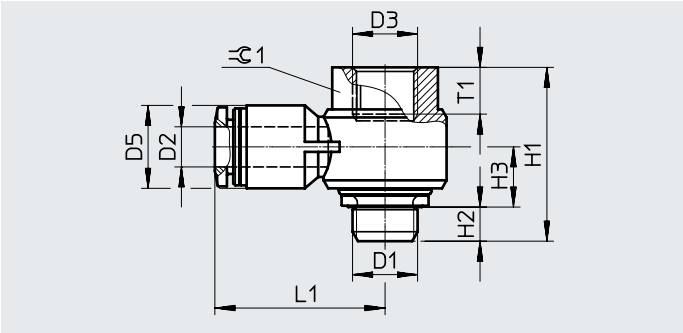

Dimensions and ordering data

Pneumatic connection		Nominal width	Dimensions [mm]								Weight/ piece	Part no.	Type	PS[1]
Male thread	For tubing O.D.		D3	D5 ø	H1	H2	H3	L1	T1	⇄1				
D1	D2	[mm]									[g]			
R thread														
R1/8	4	2.8	G1/8	10	32.5	8	12	22.2	7	14	22	**153182**	**QSTF-1/8-4-B**	**1**
	6	4.6	G1/8	12.5	32.5	8	12	24.2	7	14	23	**153183**	**QSTF-1/8-6-B**	**1**
	8	5.5	G1/8	14.5	32.5	8	12.3	26.2	7	14	25	**153185**	**QSTF-1/8-8-B**	**1**
R1/4	6	4.3	G1/4	12.5	38.5	11	13.5	26.8	9.5	17	37	**153184**	**QSTF-1/4-6-B**	**1**
	8	6	G1/4	14.5	38.5	11	13.5	28.2	9.5	17	38	**153186**	**QSTF-1/4-8-B**	**1**
	10	7.1	G1/4	17.5	38.5	11	15	30.5	9.5	17	41	**153188**	**QSTF-1/4-10-B**	**1**
R3/8	8	6	G3/8	14.5	44.5	12	15.7	30.2	11	21	61	**153187**	**QSTF-3/8-8-B**	**1**
	10	8	G3/8	18	44.5	12	15.7	32.5	11	21	64	**153189**	**QSTF-3/8-10-B**	**1**
	12	9.3	G3/8	21	44.5	12	17.2	35.2	11	21	67	**153190**	**QSTF-3/8-12-B**	**1**
R1/2	12	10	G1/2	21	52.2	13	16.5	38.2	14	24	100	**153191**	**QSTF-1/2-12-B**	**1**
G thread with sealing ring														
G1/8	4	3	G1/8	10	26	5.1	8.7	23.4	7	14	20	**186199**	**QSTF-G1/8-4**	**1**
	6	4	G1/8	12.4	26	5.1	9	25.5	7	14	21	**186200**	**QSTF-G1/8-6**	**1**
	8	5.6	G1/8	14.4	26	5.1	10	28.4	7	14	23	**186202**	**QSTF-G1/8-8**	**1**
G1/4	6	5	G1/4	14.5	33.2	5.6	10.4	29	9.5	19	43	**186201**	**QSTF-G1/4-6**	**1**
	8	6	G1/4	14.5	33.2	5.6	10.4	28.9	9.5	19	44	**186203**	**QSTF-G1/4-8**	**1**
	10	7	G1/4	17.6	33.2	5.6	11.7	31.2	9.5	19	47	**186205**	**QSTF-G1/4-10**	**1**
G3/8	8	6	G3/8	14.4	38.1	6.6	12.6	31	11	24	71	**186204**	**QSTF-G3/8-8**	**1**
	10	8	G3/8	17.6	38.1	6.6	12.6	33.6	11	24	74	**186206**	**QSTF-G3/8-10**	**1**
	12	8.7	G3/8	21	38.1	6.6	14.3	36.4	11	24	77	**186207**	**QSTF-G3/8-12**	**1**
G1/2	12	8.7	G1/2	21	42.8	7.6	14.3	37.9	14	27	99	**186208**	**QSTF-G1/2-12**	**1**

1) Pack size

Datasheet

Push-in T-fitting QSTL
Male thread with external hex, rotatable

No. of supply lines: 1
No. of outlets: 2



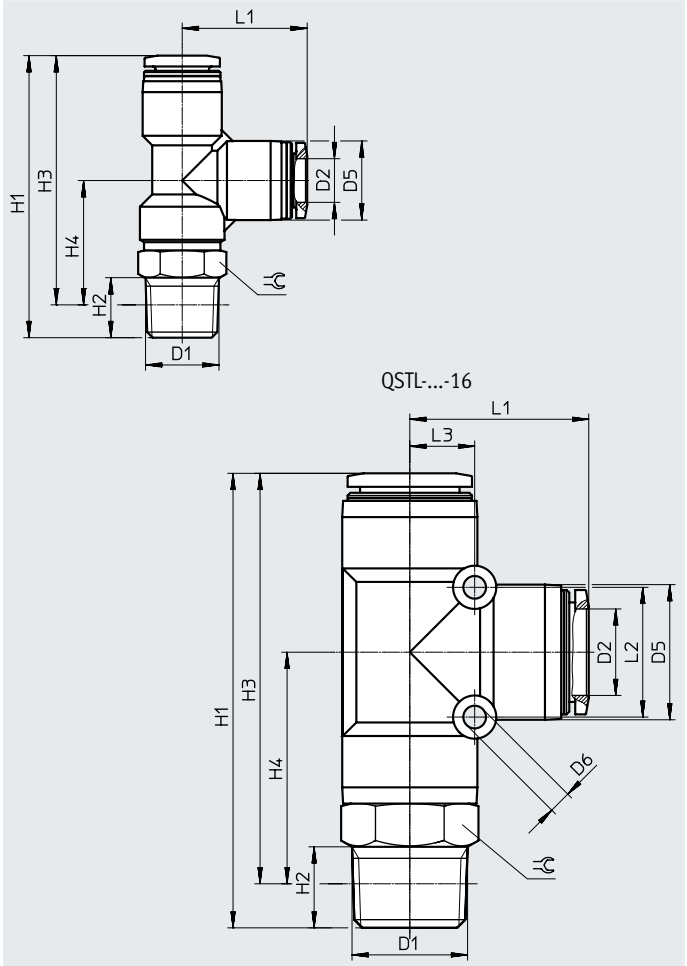

Dimensions and ordering data

Pneumatic connection		Nominal width	Dimensions [mm]										Weight/piece	Part no.	Type	PS[1]
Male thread D1	For tubing O.D. D2	[mm]	D5 ø	D6 ø	H1	H2	H3	H4	L1	L2	L3	⌀	[g]			
R thread																
R1/8	4	2.8	10	–	40.2	8	36.2	19	17.2	–	–	10	13	★ 153117	QSTL-1/8-4	10
														130824	QSTL-1/8-4-100	100
	6	4.3	12.5	–	43.3	8	39.3	18.8	20.5	–	–	10	14	★ 153118	QSTL-1/8-6	10
														130825	QSTL-1/8-6-100	100
	8	6	14.5	–	46.9	8	42.9	20	22.9	–	–	12	19	★ 153120	QSTL-1/8-8	10
														130826	QSTL-1/8-8-50	50
R1/4	6	4.3	12.5	–	48.8	11	42.7	22.2	20.5	–	–	14	22	★ 153119	QSTL-1/4-6	10
														130827	QSTL-1/4-6-100	100
	8	6.7	14.5	–	51.7	11	45.7	22.8	22.9	–	–	14	25	★ 153121	QSTL-1/4-8	10
														130828	QSTL-1/4-8-50	50
	10	8	17.5	–	54.7	11	48.7	22.5	26.2	–	–	14	31	★ 153123	QSTL-1/4-10	10
														130829	QSTL-1/4-10-50	50
R3/8	8	6.7	14.5	–	55.4	12	49.1	26.2	22.9	–	–	17	35	★ 153122	QSTL-3/8-8	10
	10	8.3	17.5	–	58.2	12	51.9	25.7	26.2	–	–	17	42	★ 153124	QSTL-3/8-10	10
	12	10	21	–	63.5	12	57.2	26.7	30.5	–	–	17	48	★ 153125	QSTL-3/8-12	10
R1/2	12	10.3	21	–	67.5	15	59.3	28.8	30.7	–	–	21	72	★ 153126	QSTL-1/2-12	1
	16	13	25	4.2	84.1	15	75.9	42.8	33.1	24	12	22	93	153127	QSTL-1/2-16	1

1) Pack size

Datasheet

Push-in T-fitting QSTL
Male thread with external hex, rotatable

No. of supply lines: 1
No. of outlets: 2



G thread

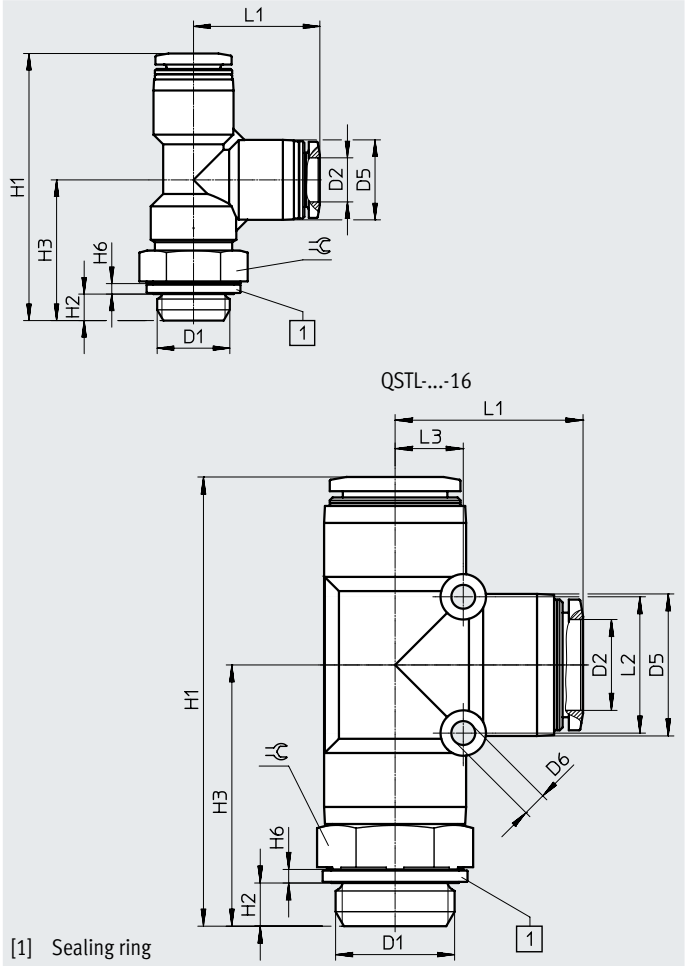

[1] Sealing ring

Dimensions and ordering data

Pneumatic connection		Nom-inal width	Dimensions [mm]										Weight/ piece	Part no.	Type	PS[1]
Male thread D1	For tubing O.D. D2	[mm]	D5 ⌀	D6 ⌀	H1	H2	H3	H6	L1	L2	L3	⌀	[g]			
G thread with sealing ring																
G1/8	4	2.8	10	–	39.3	4.2	22.1	1.9	17.2	–	–	13	15	**186168**	**QSTL-G1/8-4**	**10**
														132075	**QSTL-G1/8-4-100**	**100**
	6	4.3	12.5	–	42.4	4.2	21.9	1.9	20.5	–	–	13	17	**186169**	**QSTL-G1/8-6**	**10**
														132076	**QSTL-G1/8-6-100**	**100**
	8	6	14.5	–	45	4.2	22.1	1.9	22.9	–	–	13	19	**186171**	**QSTL-G1/8-8**	**10**
														132077	**QSTL-G1/8-8-50**	**50**
G1/4	6	4.3	12.5	–	45.5	4.8	25	1.9	20.5	–	–	17	24	**186170**	**QSTL-G1/4-6**	**10**
														132078	**QSTL-G1/4-6-100**	**100**
	8	6.7	14.5	–	48.4	4.8	25.5	1.9	22.9	–	–	17	27	**186172**	**QSTL-G1/4-8**	**10**
														132079	**QSTL-G1/4-8-50**	**50**
	10	8	17.5	–	51.4	4.8	25.2	1.9	26.2	–	–	17	33	**186174**	**QSTL-G1/4-10**	**10**
														132080	**QSTL-G1/4-10-50**	**50**
G3/8	8	6.7	14.5	–	51.6	5.8	28.7	2.4	22.9	–	–	19	34	**186173**	**QSTL-G3/8-8**	**10**
	10	8.3	17.5	–	54.4	5.8	28.2	2.4	26.2	–	–	19	41	**186175**	**QSTL-G3/8-10**	**10**
	12	10	21	–	59.7	5.8	29.2	2.4	30.5	–	–	19	48	**186176**	**QSTL-G3/8-12**	**10**
G1/2	12	10.3	21	–	63.2	6.8	32.7	2.4	30.7	–	–	24	78	**186177**	**QSTL-G1/2-12**	**1**
	16	13	25	4.2	78.3	6.8	45.2	2.4	33.1	24	12	24	89	**186178**	**QSTL-G1/2-16**	**1**

1) Pack size

Datasheet

Push-in fitting QSW
Male thread with external hex, rotatable



R thread

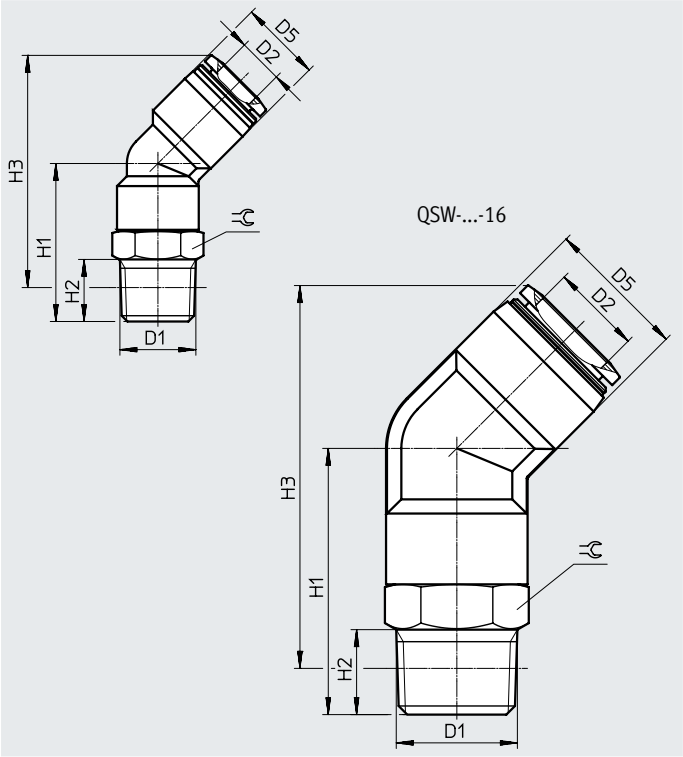

Dimensions and ordering data

Pneumatic connection		Nominal width	Dimensions [mm]					Weight/ piece	Part no.	Type	PS[1]
Male thread	For tubing O.D.		D5 ø	H1	H2	H3	⫩				
D1	D2	[mm]						[g]			
R thread											
R1/8	4	2.5	8	14.8	8	23	10	6.1	**130596**	**QSW-1/8-4**	**10**
	6	3.3	10.5	16.4	8	25.3	10	6.8	**130597**	**QSW-1/8-6**	**10**
	8	6	14.5	24	8	39.2	12	14	**130598**	**QSW-1/8-8**	**10**
R1/4	6	3.3	10.5	21.4	11	28.2	14	17.9	**130599**	**QSW-1/4-6**	**10**
	8	6.7	14.5	28	11	41.2	14	20	**130600**	**QSW-1/4-8**	**10**
	10	8	17.5	28.5	11	44.9	14	23	**130601**	**QSW-1/4-10**	**10**
R3/8	10	8.3	17.5	33	12	49.1	17	35	**130602**	**QSW-3/8-10**	**10**
	12	9.5	21	32.5	12	53.2	17	38	**130603**	**QSW-3/8-12**	**10**
R1/2	12	10.3	21	36.5	15	55.4	21	61	**130604**	**QSW-1/2-12**	**1**
	16	13	25	47	15	67.6	22	78	**130605**	**QSW-1/2-16**	**1**

1) Pack size

Datasheet

Push-in connector QSW-...HL
With push-in sleeve



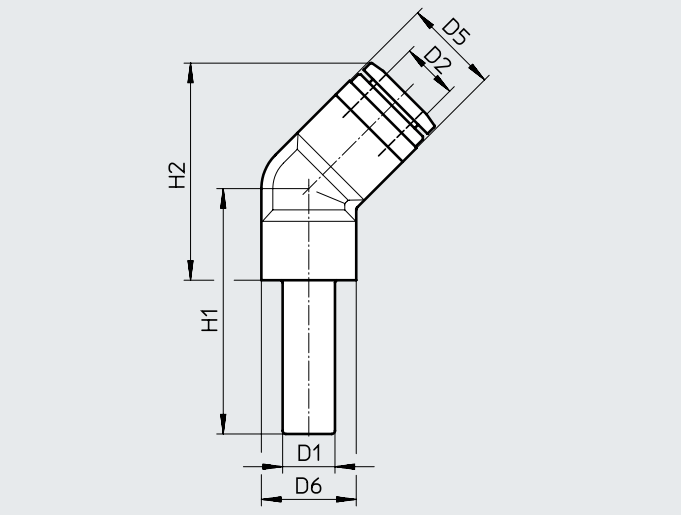

Dimensions and ordering data

Pneumatic connection		Nominal width	Dimensions [mm]				Weight/ piece	Part no.	Type	PS[1]
Push-in sleeve D1	For tubing O.D. D2	[mm]	D5	D6	H1	H2	[g]			
QS-4	4	2	8	8	21.8	15	1.4	**130617**	**QSW-4HL**	**10**
QS-6	6	2.7	10.5	8	24.6	17.3	2.1	**130618**	**QSW-6HL**	**10**
QS-8	8	5	14.5	10	28.5	25.7	5.8	**130619**	**QSW-8HL**	**10**
QS-10	10	6.3	17.5	11	31.5	30.5	9.5	**130620**	**QSW-10HL**	**10**
QS-12	12	6.9	21	14	35.5	36.3	14.5	**130621**	**QSW-12HL**	**10**

1) Pack size

Push-in X-connector QSX

No. of supply lines: 1
No. of outlets: 3



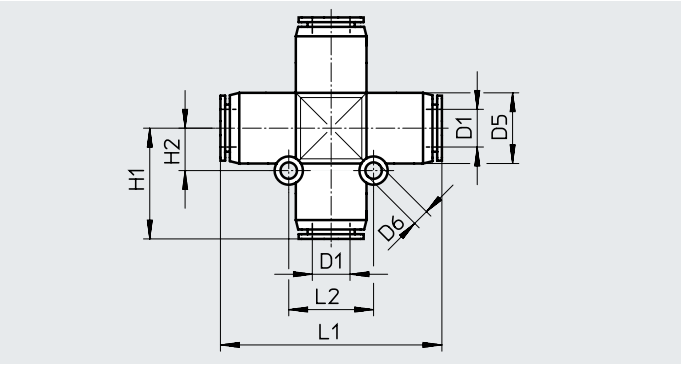

Dimensions and ordering data

Pneumatic connection	Nominal width	Dimensions [mm]						Weight/ piece	Part no.	Type	PS[1]
For tubing O.D. D1	[mm]	D5 ø	D6 ø	H1	H2	L1	L2	[g]			
8	4.7	15	3.5	23.5	9	47	18	20	**153285**	**QSX-8**	**10**
10	6.1	17.5	4.5	27.5	11	55	22	32	**153286**	**QSX-10**	**10**
12	7.5	21	4.5	31	12	62	24	46	**153287**	**QSX-12**	**10**

1) Pack size

Datasheet

Push-in Y-fitting QSY
Male thread with external hex, rotatable

No. of supply lines: 1
No. of outlets: 2



M thread

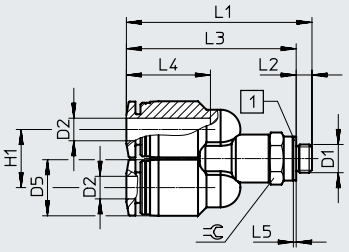

[1] Sealing ring



R thread

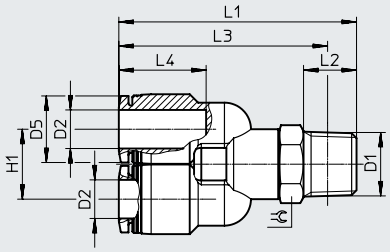

Dimensions and ordering data

Pneumatic connection		Nominal width	Dimensions [mm]								Weight/ piece	Part no.	Type	PS[1]
Male thread	For tubing O.D.		D5 Ø	H1	L1	L2	L3	L4	L5	⫷				
D1	D2	[mm]									[g]			
Metric thread with sealing ring														
M5x0.8	4	2.4	10	10.3	32.9	2.8	30.1	14.9	0.5	8	8	★ **190673**	**QSY-M5-4**	**10**
	6	2.4	12.5	12.5	38.3	2.8	35.5	17	0.5	10	13	★ **190674**	**QSY-M5-6**	**10**
R thread														
R1/8	4	3.1	10	10.3	38.4	8	34.4	14.9	–	10	13	★ **153138**	**QSY-1/8-4**	**10**
	6	4.2	12.5	12.5	41.3	8	37.3	17	–	10	15	★ **153139**	**QSY-1/8-6**	**10**
	8	5.9	14.5	14.5	46.1	8	42.1	18.1	–	12	20	★ **153141**	**QSY-1/8-8**	**10**
R1/4	4	3.3	10	10.3	43.4	11	37.4	14.9	–	14	20	★ **190675**	**QSY-1/4-4**	**10**
	6	4.8	12.5	12.5	48.3	11	42.2	17	–	14	22	★ **153140**	**QSY-1/4-6**	**10**
	8	6.2	14.5	14.5	49.3	11	43.3	18.1	–	14	25	★ **153142**	**QSY-1/4-8**	**10**
	10	7.2	17.5	17.5	53.6	11	47.6	20.2	–	14	32	★ **153144**	**QSY-1/4-10**	**10**
R3/8	8	6.6	14.5	14.5	52.5	12	46.2	18.1	–	17	36	★ **153143**	**QSY-3/8-8**	**10**
	10	7.4	17.5	17.5	56.7	12	50.4	20.2	–	17	43	★ **153145**	**QSY-3/8-10**	**10**
	12	8.4	21	21	60.6	12	54.3	23.4	–	17	51	★ **153146**	**QSY-3/8-12**	**10**
R1/2	10	7.8	17.5	17.5	60.2	15	52	20.2	–	21	66	**133196**	**QSY-1/2-10**	**10**
	12	8.3	21	21	64.7	15	56.5	23.4	–	21	74	★ **153147**	**QSY-1/2-12**	**1**

1) Pack size

Datasheet

Push-in Y-fitting QSY
Male thread with external hex, rotatable

No. of supply lines: 1
No. of outlets: 2



G thread

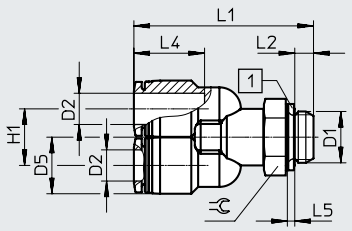

[1] Sealing ring

Dimensions and ordering data

Pneumatic connection		Nominal width	Dimensions [mm]							Weight/ piece	Part no.	Type	PS[1]
Male thread D1	For tubing O.D. D2	[mm]	D5 ⌀	H1	L1	L2	L4	L5	⌀	[g]			
G thread with sealing ring													
G1/8	4	3.1	10	10.3	37.5	4.2	14.9	1.9	13	15	**186179**	**QSY-G1/8-4**	**10**
	6	4.2	12.5	12.5	40.4	4.2	17	1.9	13	17	**186180**	**QSY-G1/8-6**	**10**
	8	5.9	14.5	14.5	44.2	4.2	18.1	1.9	13	20	**186182**	**QSY-G1/8-8**	**10**
G1/4	6	4.8	12.5	12.5	45	4.8	17	1.9	17	25	**186181**	**QSY-G1/4-6**	**10**
	8	6.2	14.5	14.5	46	4.8	18.1	1.9	17	28	**186183**	**QSY-G1/4-8**	**10**
	10	7.2	17.5	17.5	50.3	4.8	20.2	1.9	17	35	**186185**	**QSY-G1/4-10**	**10**
G3/8	8	6.6	14.5	14.5	48.7	5.8	18.1	2.4	19	35	**186184**	**QSY-G3/8-8**	**10**
	10	7.4	17.5	17.5	52.9	5.8	20.2	2.4	19	42	**186186**	**QSY-G3/8-10**	**10**
	12	8.4	21	21	56.8	5.8	23.4	2.4	19	50	**186187**	**QSY-G3/8-12**	**10**
G1/2	12	8.3	21	21	60.4	6.8	23.4	2.4	24	80	**186188**	**QSY-G1/2-12**	**1**

1) Pack size

Datasheet

Push-in Y-connector QSY

No. of supply lines: 1
No. of outlets: 2



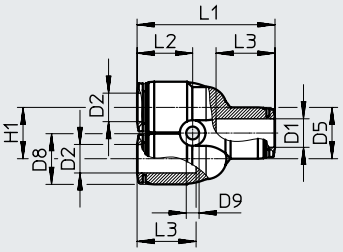

2 reducing outlets



Reducing

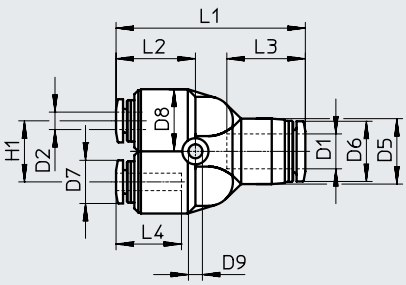

Dimensions and ordering data

Pneumatic connection		Nominal width	Dimensions [mm]										Weight/piece	Part no.	Type	PS[1]
For tubing O.D. D1	For tubing O.D. D2	[mm]	D5 ø	D6 ø	D7 ø	D8 ø	D9 ø	H1	L1	L2	L3	L4	[g]			
4	4	2.6	10	–	–	10	3.2	11	32.8	14.1	14.9	–	7.6	★ 153148	QSY-4	10
														130807	QSY-4-100	100
6	6	4.3	13	–	–	12.5	3.4	12	37.7	15.8	17	–	11	★ 153149	QSY-6	10
														130808	QSY-6-100	100
8	8	5.7	15	–	–	14.5	3.4	14	42.4	17.2	18.1	–	16	★ 153150	QSY-8	10
														130809	QSY-8-50	50
10	10	6.7	17.5	–	–	17.5	4.2	18	48.4	19.5	20.7	–	26	★ 153151	QSY-10	10
														130810	QSY-10-20	20
12	12	8	21	–	–	21	4.2	20	54.9	22.3	23.4	–	37	★ 153152	QSY-12	10
														130811	QSY-12-20	20
16	16	12.7	25	–	–	25	4.5	24	62.2	22.1	24.1	–	45	130609	QSY-16	1
Reducing																
6	4	2.3	13	11.8	9.9	12.5	3.4	12	37.2	15.2	17	14.9	11	★ 153153	QSY-6-4	10
														130812	QSY-6-4-100	100
8	4	1.7	14.5	13.8	9.9	12.5	3.4	14	41.9	16.7	18.1	14.9	13	★ 130610	QSY-8-4	10
	6	3.2	14.5	13.8	11.8	12.5	3.4	14	42.5	17.3	18.1	17	13	★ 153154	QSY-8-6	10
														130813	QSY-8-6-50	50
10	6	3.3	17.5	16.8	11.8	14.5	4.5	18	48.2	19.3	20.2	17	19	★ 130611	QSY-10-6	10
	8	4.5	17.5	16.8	13.8	14.5	4.5	18	48.1	19.2	20.2	18.1	20	★ 153155	QSY-10-8	10
														130814	QSY-10-8-20	20
12	8	4.5	21	19.8	13.8	17.5	4.5	20	54.3	21.7	23.4	18.1	27	★ 130612	QSY-12-8	10
	10	5.8	21	19.8	16.8	17.5	4.5	20	54.6	22	23.4	20.2	30	★ 153156	QSY-12-10	10
														130815	QSY-12-10-20	20
16	12	7	25	23	19.8	25	4.5	24	62.3	22.2	24.1	23.4	48	★ 190708	QSY-16-12	1

1) Pack size

Datasheet

Push-in Y-connector QSY-...H
With push-in sleeve

No. of supply lines: 1
No. of outlets: 2



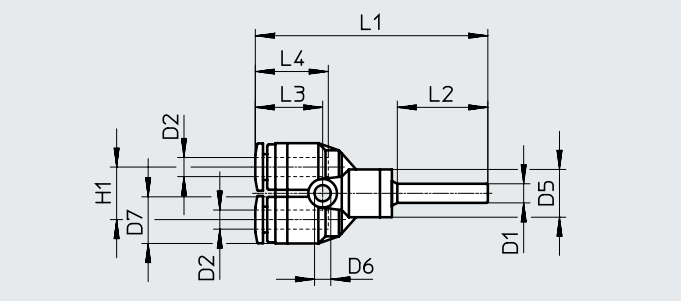

Dimensions and ordering data

Pneumatic connection		Nominal width	Dimensions [mm]								Weight/ piece	Part no.	Type	PS[1]
Push-in sleeve D1	For tubing O.D. D2	[mm]	D5 Ø	D6 Ø	D7 Ø	H1	L1	L2	L3	L4	[g]			
QS-4	4	1.6	10	3.2	10	11	48.7	19	14.1	14.9	6.5	**130628**	**QSY-4H**	**10**
Reducing														
QS-6	4	2.3	10	3.2	10	11	50.9	22	14.1	14.9	6.8	**130633**	**QSY-6H-4**	**10**

1) Pack size

Push-in Y-connector QSY-...H-B
With push-in sleeve

No. of supply lines: 1
No. of outlets: 2



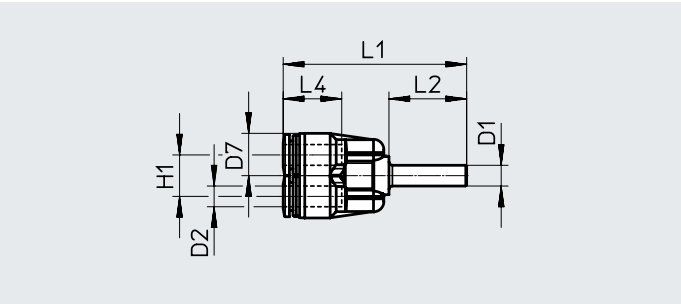

Dimensions and ordering data

Pneumatic connection		Nominal width	Dimensions [mm]					Weight/ piece	Part no.	Type	PS[1]
Push-in sleeve D1	For tubing O.D. D2	[mm]	D7 Ø	H1	L1	L2	L4	[g]			
QS-6	6	3.1	12.5	12	53.2	22.5	17	8.5	**133145**	**QSY-6H-B**	**10**
QS-8	8	4.6	14.5	14	56.1	23.5	18.1	13	**133146**	**QSY-8H-B**	**10**
QS-10	10	5.9	17.5	18	63.2	25	20.2	21	**133148**	**QSY-10H-B**	**10**
QS-12	12	7.3	21	20	71.3	29	23.4	31	**133150**	**QSY-12H-B**	**10**
Reducing											
QS-8	6	3.6	12.5	12	54.2	23.5	17	8.8	**133147**	**QSY-8H-6-B**	**10**
QS-10	8	4.6	14.5	14	57.6	25	18.1	13	**133149**	**QSY-10H-8-B**	**10**
QS-12	10	5.9	17.5	18	67.2	29	20.2	22	**133151**	**QSY-12H-10-B**	**10**

1) Pack size

Datasheet

Push-in Y-fitting QSYL
Male thread with external hex, rotatable

No. of supply lines: 1
No. of outlets: 2



R thread

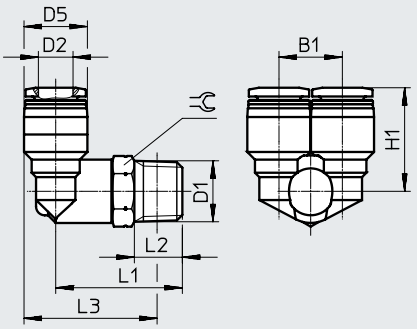



G thread

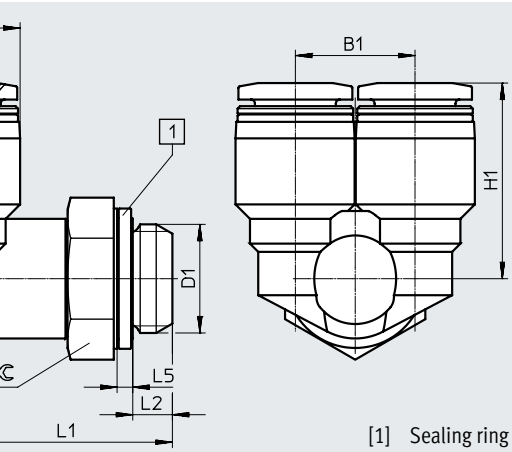

[1] Sealing ring

Dimensions and ordering data

Pneumatic connection		Nominal width	Dimensions [mm]								Weight/ piece	Part no.	Type	PS[1]
Male thread	For tubing O.D.		B1	D5 Ø	H1	L1	L2	L3	L5	⫧				
D1	D2	[mm]									[g]			
R thread														
R1/8	4	3.9	10.3	10	18.2	23	8	24	–	10	13	★ 153172	QSYL-1/8-4	1
	6	4.2	12.5	12.5	19.8	23.5	8	25.8	–	10	15	★ 153173	QSYL-1/8-6	1
	8	5.7	14.5	14.5	22.7	25	8	28.3	–	12	20	★ 153175	QSYL-1/8-8	1
R1/4	6	5.3	12.5	12.5	21.8	29	11	29.2	–	14	22	★ 153174	QSYL-1/4-6	1
	8	7.3	14.5	14.5	23.7	29	11	30.2	–	14	25	★ 153176	QSYL-1/4-8	1
	10	8	17.5	17.5	26	29.5	11	32.2	–	14	32	★ 153178	QSYL-1/4-10	1
R3/8	8	7.3	14.5	14.5	24.7	32	12	32.9	–	17	37	★ 153177	QSYL-3/8-8	1
	10	9.2	17.5	17.5	27	32.5	12	34.9	–	17	43	★ 153179	QSYL-3/8-10	1
	12	9.7	21	21	29.2	33.5	12	37.7	–	17	51	★ 153180	QSYL-3/8-12	1
R1/2	12	10.6	21	21	30.2	38	15	40.3	–	21	74	★ 153181	QSYL-1/2-12	1
G thread with sealing ring														
G1/8	4	3.9	10.3	10	18.2	22.1	4.2	–	1.9	13	16	186189	QSYL-G1/8-4	1
	6	4.2	12.5	12.5	19.8	22.6	4.2	–	1.9	13	18	186190	QSYL-G1/8-6	1
	8	5.7	14.5	14.5	22.7	23.1	4.2	–	1.9	13	20	186192	QSYL-G1/8-8	1
G1/4	6	5.3	12.5	12.5	21.8	25.7	4.8	–	1.9	17	26	186191	QSYL-G1/4-6	1
	8	7.3	14.5	14.5	23.7	25.7	4.8	–	1.9	17	29	186193	QSYL-G1/4-8	1
	10	8	17.5	17.5	26	26.2	4.8	–	1.9	17	36	186195	QSYL-G1/4-10	1
G3/8	8	7.3	14.5	14.5	24.7	28.2	5.8	–	2.4	19	38	186194	QSYL-G3/8-8	1
	10	9.2	17.5	17.5	27	28.7	5.8	–	2.4	19	45	186196	QSYL-G3/8-10	1
	12	9.7	21	21	29.2	29.7	5.8	–	2.4	19	52	186197	QSYL-G3/8-12	1
G1/2	12	10.6	21	21	30.2	33.7	6.8	–	2.4	24	80	186198	QSYL-G1/2-12	1

1) Pack size

Datasheet

Push-in Y-fitting QSYLV
Male thread with external hex, rotatable

No. of supply lines: 1
No. of outlets: 2



R thread

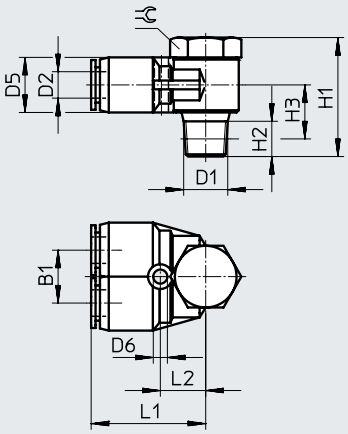



G thread

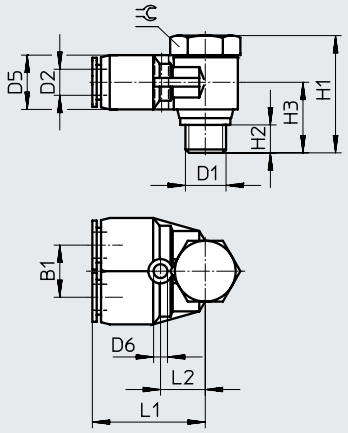

Dimensions and ordering data

Pneumatic connection		Nominal width	Dimensions [mm]									Weight/ piece	Part no.	Type	PS[1]
Male thread D1	For tubing O.D. D2	[mm]	B1	D5 ø	D6 ø	H1	H2	H3	L1	L2	⫩	[g]			
R thread															
R1/8	6	3.3	12	12.5	3.2	27	8	11	26	10.5	14	24.5	**153192**	**QSYLV-1/8-6**	**1**
R1/4	8	4.4	14	14.5	3.2	31.5	11	12.5	29	12.5	17	41.5	**153193**	**QSYLV-1/4-8**	**1**
R3/8	10	5.7	17	17.5	4.2	36	12	14.5	33.5	15	21	69.5	**153194**	**QSYLV-3/8-10**	**1**
R1/2	12	7.1	20	21	4.2	40	15	17.5	37.5	17	24	102	**153195**	**QSYLV-1/2-12**	**1**
G thread with sealing ring															
G1/8	6	3.5	12	12.4	3.2	26.2	5.1	15.2	27.5	12	17	31	**186209**	**QSYLV-G1/8-6**	**1**
G1/4	8	4.7	14	14.4	3.2	28.4	5.6	16.4	30.9	14	19	48	**186210**	**QSYLV-G1/4-8**	**1**
G3/8	10	5.2	17	17.6	4.2	33.4	6.6	19.4	34	15.5	21	73	**186211**	**QSYLV-G3/8-10**	**1**
G1/2	12	7	20	21	4.2	37.4	7.6	21.9	38.9	18.5	27	123	**186212**	**QSYLV-G1/2-12**	**1**

1) Pack size

Accessories

Releasing tool QSO
Releasing tool for disconnecting tubing from the plug-in connection in locations that are difficult to access.



Dimensions and ordering data

For tubing O.D.	Weight/ piece [g]	Part no.	Type
4, 6, 8, 10	13	**158419**	**QSO**

Unikeyic Electronics

Global Electronic Components Distributor

Click to view pricing, inventory, delivery, and lifecycle information:

FESTO:

DFM-63-100-P-A-KF DSBC-32-50-D3-PPVA-N3 NPQP-D-Q4-S8-FD-P10 QSLL-1/4-4 NPQP-LQ-R18-Q8-FD-P10 QS-1/2-16 QSML-6 SNC-63 DSNU-12-60-P-A NPQP-LQ-R18-Q4-FD-P10 SPTE-V1R-Q3-V-2.5K CRVZS-0.4 DSBC-32-40-D3-PPVA-N3 DSBC-63-320-D3-PPVA-N3 DSBC-80-250-D3-PPSA-N3 NPQH-T-G38-Q8-P10 NPQP-Y-Q6-E-FD-P10 NPQP-Y-R12-Q12-FD PUN-H-4X0,75-TBL QSS-8-F VBQF-U-G14-E DSBC-50-20-D3-PPSA-N3 NPQP-L-Q10-E-FD-P10 QH-1 1/2 QSML-3 DSBC-80-320-D3-PPVA-N3 MSFW-110-50/60-DS N-1/8-P-6 QSLV-G1/4-6 VABM-L1-18W-G38-8-G