1 Product Identification

GDNR	8040	-	150	M	T	F
①	②		③	④	⑤	⑥

① Product Symbol

② Dimensions（See two）

③ Inductance Value (150:15.0μH)

④ Inductance Tolerance (J:±5%;K:±10%; M:±20%; N:±30%)

⑤ Packaging Style (B: Bulk; T: Tape & Reel)

⑥ Lead Free

2 Appearance, Dimensions(mm)

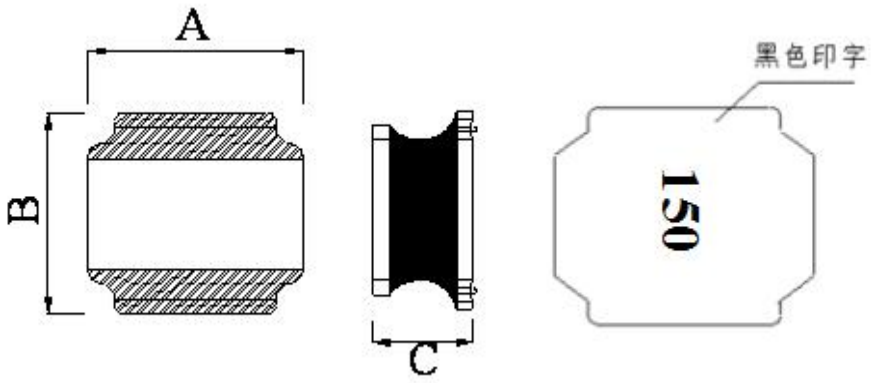

A	B	C
8.0±0.2	8.0±0.2	4.0Max

LAND PATTERN DIMENSIONS

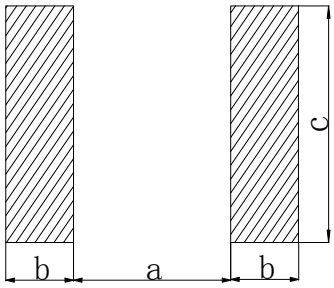

/	mm
a	3.8
b	2.5
c	7.5

3 Specifications

Part No.	Inductance L0(uH) ±20% @100KHz/1V	RDC (mΩ)	Saturation Current (A)Max	Heat Rating Current (A)Max
GDNR8040-150MTF	15	50±30%	2.8	2.4
GDNR8040-220MTF	22	66±30%	2.3	2.2
GDNR8040-330MTF	33	97±30%	2.05	1.8
GDNR8040-470MTF	47	136±30%	1.75	1.55
GDNR8040-331MTF	330	1100±30%	0.68	0.5

※ Note

*Rated current is the DC current that reduces the initial inductance by 30% or when the temperature rises △ T = 40℃

4 Packaging

(1) Dimensions of Reel（mm）

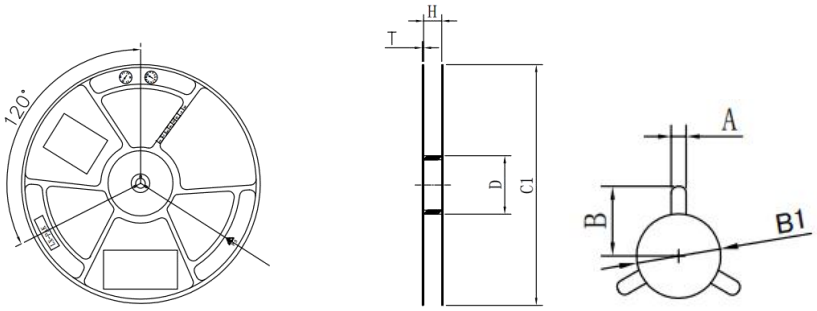

	Size（mm）
C1	330 ± 3.0
H	16.8 ± 0.5
A	2.5± 0.3
B	10.75 ± 0.3
B1	13+0.5/-0.2
T	2.0 ± 0.2
D	100±1.0

(2) Dimensions of Tape (mm):

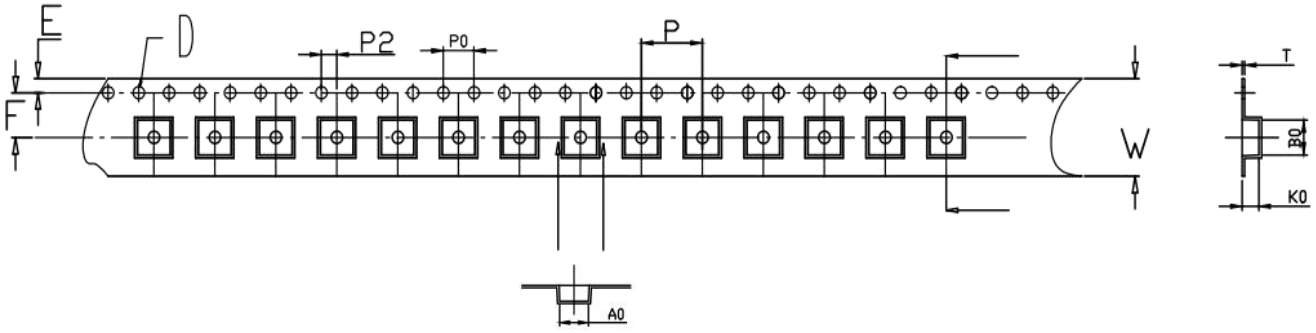

W	A0	B0	K0	P	F	E	D	P0	P2	T	Packaging quantity
16.0 ±0.3	8.6 ±0.1	8.6 ±0.1	4.6 ±0.1	12.0 ±0.1	7.5 ±0.1	1.75 ±0.1	1.5+ 0.1/-0.0	4.0 ±0.1	2.0 ±0.1	0.40 ±0.05	1000PCS/REEL