http://hcdz2017.com/

| 标 记 MARK | ECN编号/变更内容 ECN NO/DEFINITION | 修 改 REVISE | 日 期 DATE | 核 准 APPROVE |
|---|---|---|---|---|
| | | | | |

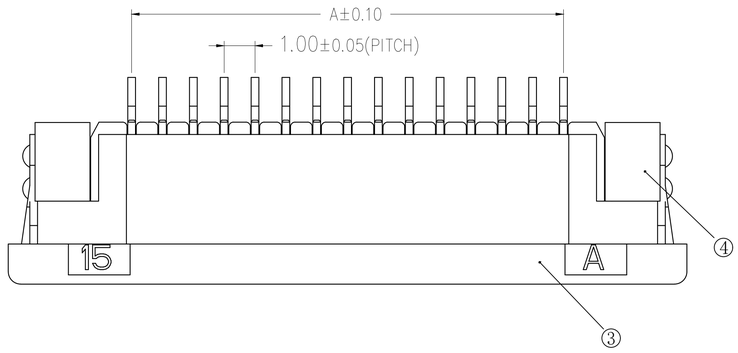


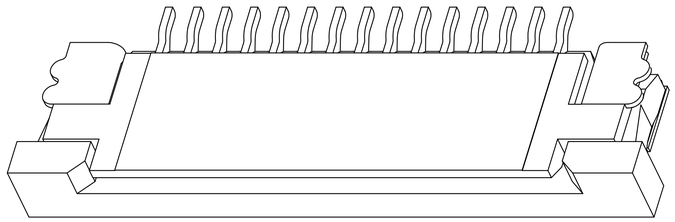

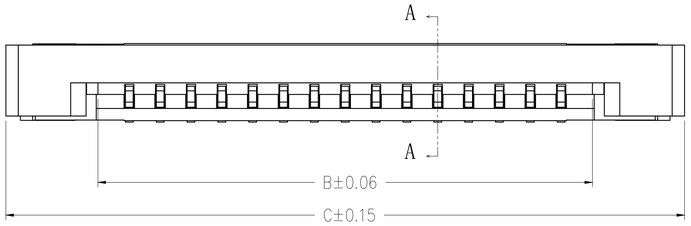


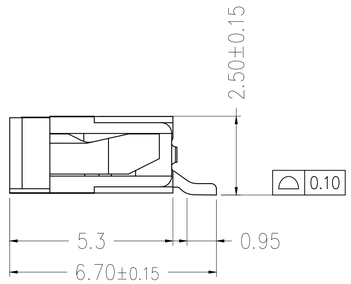


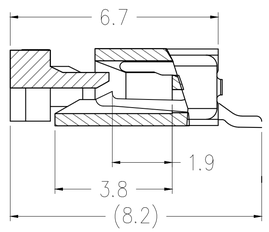


SECTION A-A

| CKI | DIM A | DIM B | DIM C |
|---|---|---|---|
| 4 | 3.00 | 5.06 | 11.10 |
| 5 | 4.00 | 6.06 | 12.10 |
| 6 | 5.00 | 7.06 | 13.10 |
| 7 | 6.00 | 8.06 | 14.10 |
| 8 | 7.00 | 9.06 | 15.10 |
| 9 | 8.00 | 10.06 | 16.10 |
| 10 | 9.00 | 11.06 | 17.10 |
| 11 | 10.00 | 12.06 | 18.10 |
| 12 | 11.00 | 13.06 | 19.10 |
| 13 | 12.00 | 14.06 | 20.10 |
| 14 | 13.00 | 15.06 | 21.10 |
| 15 | 14.00 | 16.06 | 22.10 |
| 16 | 15.00 | 17.06 | 23.10 |
| 17 | 16.00 | 18.06 | 24.10 |
| 18 | 17.00 | 19.06 | 25.10 |
| 19 | 18.00 | 20.06 | 26.10 |
| 20 | 19.00 | 21.06 | 27.10 |
| 21 | 20.00 | 22.06 | 28.10 |
| 22 | 21.00 | 23.06 | 29.10 |
| 23 | 22.00 | 24.06 | 30.10 |
| 24 | 23.00 | 25.06 | 31.10 |
| 25 | 24.00 | 26.06 | 32.10 |
| 26 | 25.00 | 27.06 | 33.10 |
| 27 | 26.00 | 28.06 | 34.10 |
| 28 | 27.00 | 29.06 | 35.10 |
| 29 | 28.00 | 30.06 | 36.10 |
| 30 | 29.00 | 31.06 | 37.10 |
| 32 | 31.00 | 33.06 | 39.10 |

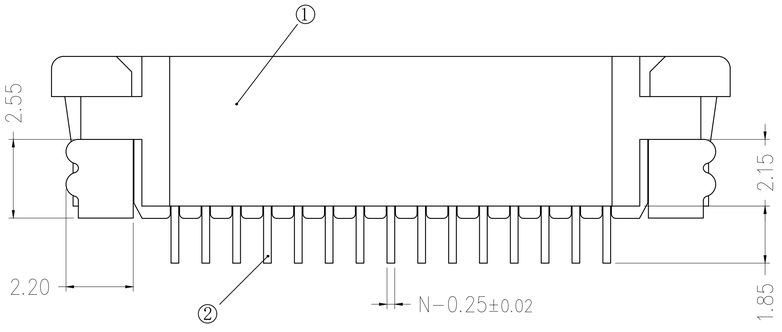


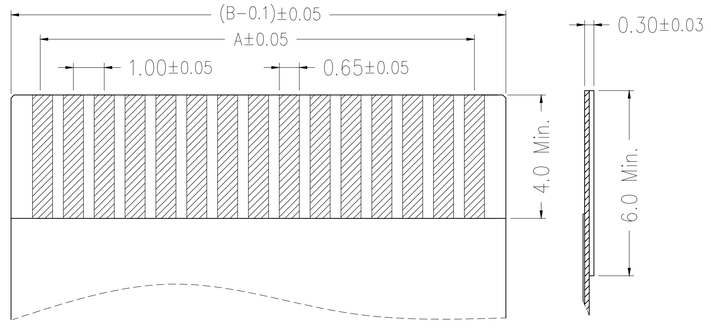


适用扁平线(Applicable Flat Cable)

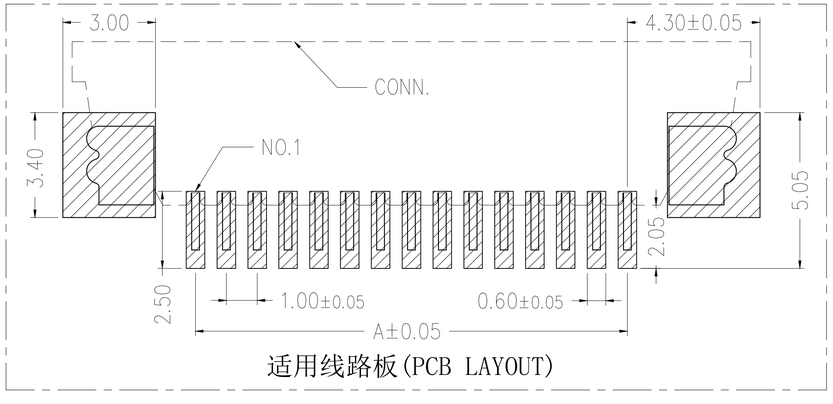


适用线路板(PCB LAYOUT)

技术指标(Technical Index):

1. 塑件表面应光洁、无毛边、无明显收缩、 缺陷、裂纹等现象.(The surface of the plastic parts should be smooth,no rough edges,no obvious shrinkage,defects, cracks and other phenomena.)
2. 温度范围(Temperature range): -25° C～85° C.
3. 额定电压(Rated voltage): 50V, AC/DC(=等效).
4. 接触电阻(Contact resistance): ≤0.03Ω.
5. 绝缘电阻(Insulation resistance):≥500MΩ.

| 序 号 | 品 名 | 材 质 | 电镀/颜色 | 备 注 |
|---|---|---|---|---|
| 2 | 端子 | 铜 | 镀锡 | |
| 1 | 胶芯 | LCP | 黑色 | |

| | | | | | |
|---|---|---|---|---|---|
| 深圳市虹成电子有限公司 | | 品 名 TITLE | FPC座 | | |
| | | 料 号 PART NO | HC-FPC-1.0-12P-CXH25 | | |
| GENERAL TOLERANCES (UNLESS SPECIFIED) | 比 列 SCALE | 1:1 | | | |
| X. ±.50 .XX ±.10 .X ±.20 .XXX ±.05 ANGLES ±1° | 单 位 UNIT | MM | 制 图 DRAW | AhYe | |
| | 张 数 PART NO | 1 OF 1 | 审 核 CHECKED | 夏操云 | |
| | 版 本 REV | A | 批 准 APPROVE | 赵亮亮 | |

http://hcdz2017.com/

# Unikeyic Electronics

Global Electronic Components Distributor

Click to view pricing, inventory, delivery, and lifecycle information:

## HC:

HC-PHB2.0-2x4AW HC-PM200-4.3H-2x20PZ HCZZ0451-6 HC-PHB2.0-2x5A HC-PZ254-13.8L-1x6PWA HC-USB2.0-L100-093P HC-USB3.0-C34-P HC-PM200-4.3H-2x6PS HC-PM254-8.5H-2x20PS HCZZ0451-4 HC-FPC-0.5-50P-FHH20 HC-PM254-5.0H-2x10PZ HC-PM254-8.5H-2x30PZ HC-PZ127-7.2L-2x3PS HC-PZ254-11.5L-1x20PZ HC-FPC-0.5-6P-CSH20 HC-PM254-8.5H-1x21PZ HC-PZ254-11.5L-2x18PZ HC-USB3.0-C26 HC-USB3.0-L175-2X1-J HC-USB3.0-L257-J HCZZ0001-2 HCZZ0032-6 HCZZ0514-6 HC-FPC-0.5-10P-FH20 HC-FPC-0.5-24P-FH20 HC-FPC-0.5-40P-FH20 HC-PM200-4.3H-2x8PS HC-PZ254-11.5L-1x10PZ HCZZ0576-5