ISO9001 ISO14001 IATF16949 **CHILISIN ELECTRONICS CORP.**

RoHS & Halogen Free & REACH Compliance.

SPECIFICATION FOR APPROVAL

Customer：	**DIGI-KEY**			
Customer P/N:				
Drawing No：	**CE1-041667**			
Quantity：	**0**	**Pcs.**	**Date：**	**2020/04/16**
Chilisin P/N：	**EHEI201608A-R47M-Q7DG**			

SPECIFICATION ACCEPTED BY:	
COMPONENT ENGINEER	
ELECTRICAL ENGINEER	
MECHANICAL ENGINEER	
APPROVED	
REJECTED	

奇力新電子股份有限公司
Chilisin Electronics Corp
No. 29, Alley 301, Tehhsin Rd., Hukou,Hsinchu 303, Taiwan
TEL：+886-3- 599-2646
FAX：+886-3- 599-9176
E-mail：sales@chilisin.com
http：//www.chilisin.com

東莞奇力新電子(東莞廠)有限公司
Chilisin Electronics (Dongguan) Co., Ltd.
No. 78, Puxing Rd., Yuliangwei Administration Area, Qingxi Town, Dongguan City, Guangdong,China
TEL：+86-769-8773-0251~3
FAX： +86-769-8773-0232
E-mail：cect@chilisin.com

奇力新電子(越南廠)有限公司
Chilisin Electronics (Vietnam) Limited
No 143 - 145, Road No 10, VSIP Hai Phong, Lap Le Commune, Thuy Nguyen Dist, Haiphong City, Vietnam
Tel：84-316 255 688 Fax：84-316 255 689
E-mail：sales@chilisin.com

奇力新電子(湖南廠)有限公司
HuNan Chilisin Electronics Technology Co., Ltd
No. 8, Shaziao Liangshuijing Town, Yuanling County, Huaihua City, Hunan Province 419601, China
Tel：86-745-867-5882
E-mail：cect@chilisin.com

Drawn by	Checked by	Approved by
張鈺雯 **Chang.Yuwen**	張鈺雯 **Chang.Yuwen**	葉信賢 **Ben.Yeh**

ISO9001 ISO14001 IATF16949 CHILISIN ELECTRONICS CORP.

EHEI201608A Series Specification

1 Scope:

This specification applies to Alloy Molding power inductors

2 Part Numbering:

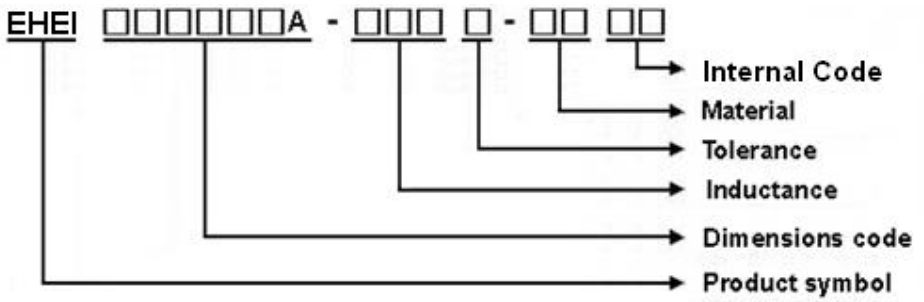

3 Rating:

Operating Temperature: -40℃~125℃(Including self - temperature rise)

Storage Temperature: -40℃~125℃(after PCB)
-5℃~35℃,Humidity 45%~85%(before PCB)

4 Marking:

No Marking

5 Standard Testing Condition

	Unless otherwise specified	In case of doubt
Temperature	Ordinary Temperature(15 to 35℃)	20 to 30℃
Humidity	Ordinary Humidity(25 to 85% RH)	50 to 80 %RH

ISO9001 ISO14001 IATF16949 CHILISIN ELECTRONICS CORP.

EHEI201608A Series Specification

6 Configuration and Dimensions:

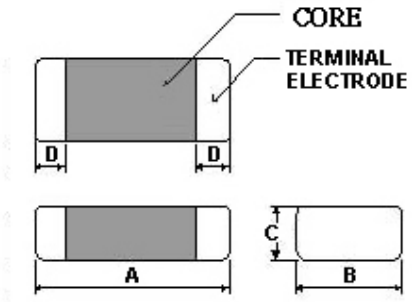

Dimensions in mm

TYPE	EHEI201608A
A	2.0±0.2
B	1.6±0.2
C	0.8max
D	0.5±0.3

7 Electrical Characteristics:

Part No.	Inductance (uH)	Tolerance (±%)	Test Freq.	Irms(A) Max.(Typ)	Isat(A) Max.(Typ)	RDC(mΩ) Max.(Typ)
EHEI201608A-R47M-Q7DG	0.47	20	2MHz,0.2V	4.0(4.1)	4.7(4.8)	24(21.5)

NOTE:

1.Operating temperature range -40℃~125℃(Including self - temperature rise)

2.Isat for Inductance drop 30% from its value without current.

3.Irms for a 40℃ temperature rise from 25℃ ambient.

4.All test data is referenced to 25℃ ambient

5.Absolute maximum voltage 20VDC

6. Rated current: Isat or Irms, whichever is smaller

EHEI201608A Series Specification

8 EHEI201608A Series

8.1 Construction:

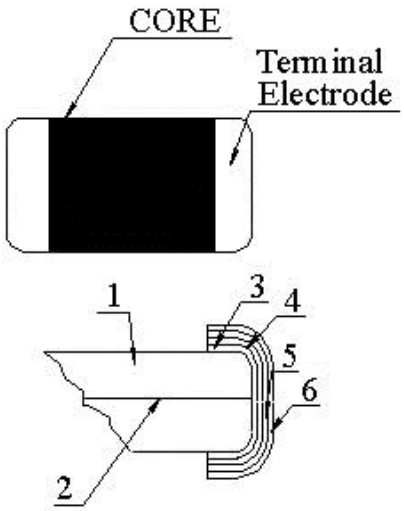

8.2 Material List:

NO	Part	Description
1	Core	Metal Powder
2	Wire	Copper wire
3	Sputter/Plating	Cu
4	Silver Electrode	Ag
5	Plating	Ni
6	Plating	Sn

EHEI201608A Series Specification

9 Reliability of molding power inductors

1-1.Mechanical Performance

No	Item	Specification	Test Method
1-1-1	Flexure Strength	The forces applied on the right conditions must not damage the terminal electrode and the metal body	Test device shall be soldered on the substrate Substrate Dimension: 100x40x1.6mm Deflection: 2.0mm Keeping Time: 30sec 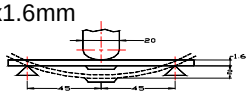
1-1-2	Vibration	Appearance:No damage (for microscope of CASTOR MZ-45 20X Inductance change shall be within ±20%	Test device shall be soldered on the substrate Oscillation Frequency: 10 to 55 to 10Hz for 1min Amplitude: 1.5mm Time: 2hrs for each axis (X, Y & Z), total 6hrs
1-1-3	Resistance to Soldering Heat	Appearance: No damage More than 75% of the terminal electrode should be covered with solder. Inductance: within ±20% of initial value	Pre-heating: 150℃, 1min Solder Composition: Sn/Ag3.0/Cu0.5(Pb-Free) Solder Temperature: 260±5℃ Immersion Time: 10±1sec
1-1-4	Solder ability	The electrodes shall be at least 95% covered with new solder coating	Pre-heating: 150℃, 1min Solder Composition: Sn/Ag3.0/Cu0.5(Pb-Free) Solder Temperature: 245±5℃ Immersion Time: 4±1sec
1-1-5	Terminal Strength Test	No split termination 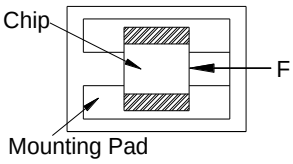	Test device shall be soldered on the substrate, then apply a force in the direction of the arrow. Force : 5N Keeping Time: 10±1sec

1-2.Environmental Performance

No	Item	Specification	Test Method
1-2-1	Temperature Cycle	Appearance: No damage Inductance:within±20% of initial value	One cycle: Step / Temperature (℃) / Time (min) 1 / -40±3 / 30 2 / 25±2 / 3 3 / 125±3 / 30 4 / 25±2 / 3 Total: 100cycles Measured after exposure in the room condition for 24hrs
1-2-2	Humidity Resistance		Temperature: 60±2℃ Relative Humidity: 90 ~ 95% / Time: 500hrs Measured after exposure in the room condition for 24hrs
1-2-3	High Temperature Resistance		Temperature: 85±3℃ Relative Humidity: 0% / Time: 500hrs Measured after exposure in the room condition for 24hrs
1-2-4	Low Temperature Resistance		Temperature: -40±3℃ Relative Humidity: 0% / Time: 500hrs Measured after exposure in the room condition for 24hrs

ISO9001 ISO14001 IATF16949 CHILISIN ELECTRONICS CORP.

EHEI201608A Series Specification

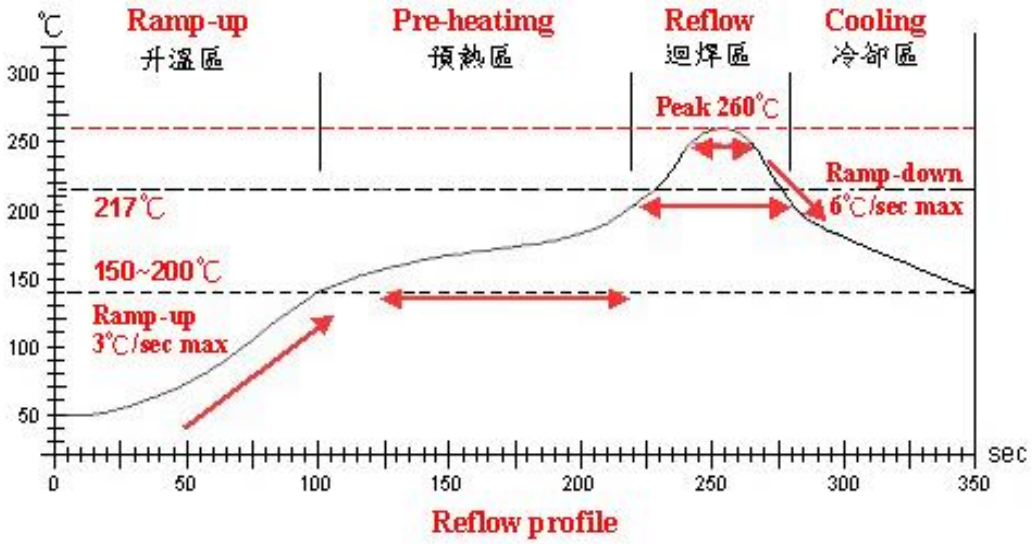

Reflow profile

Lead-Free(LF) 標準溫度分析範圍 Refer to J-STD-020C

管制項目 Item.	升溫區 Ramp-up	預熱區 Pre-heatimg	迴焊區 Reflow	Peak Temp	冷卻區 Cooling
溫度範圍 Temp.scope	R.T.~150℃	150℃~200℃	217℃	260±5℃	Peak Temp.~150℃
標準時間 Time spec.	—	60~180 sec	60~150 sec	20~40 sec	—
實際時間 Time result	—	75~100 sec	90~120 sec	20~35 sec	—

NOTE :

1. Re-flow possible times : within 2 times
2. Nitrogen adopted is recommended while in re-flow

EHEI201608A Series Specification

10 Packaging:

10.1 Packaging -Cover Tape

The force for tearing off cover tape is 10 to 100 grams in the arrow direction.

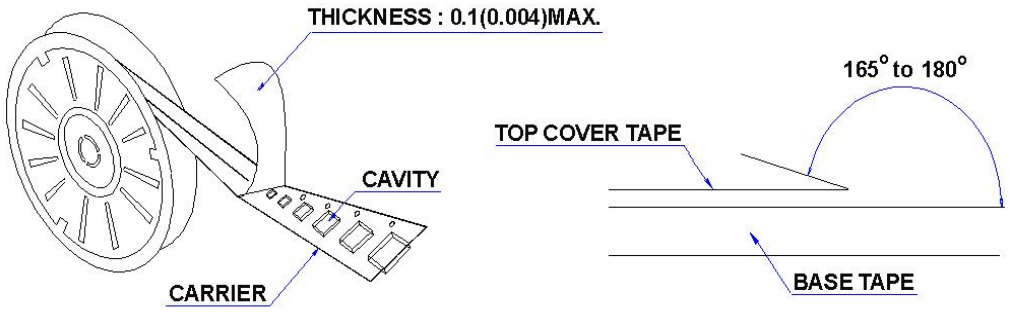

10.2 Packaging Quantity

TYPE	PCS/REEL
EHEI201608A	3000

10.3 Reel Dimensions

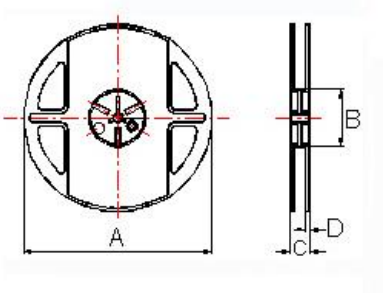

Dimensions in mm

TYPE	A	B	C	D
EHEI201608A	178	60	12	1.5

EHEI201608A Series Specification

10 Packaging:

10.4 Tape Dimensions in mm

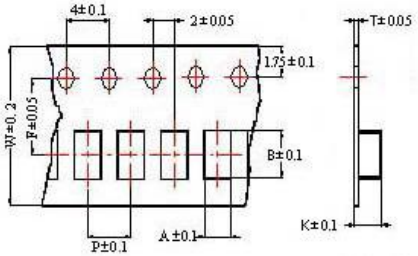

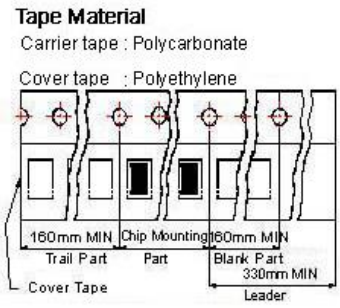

TYPE	A	B	T	W	P	F	K
EHEI201608A	1.8	2.2	0.22	8	4	3.5	1.05

11 Recommended Land Pattern:

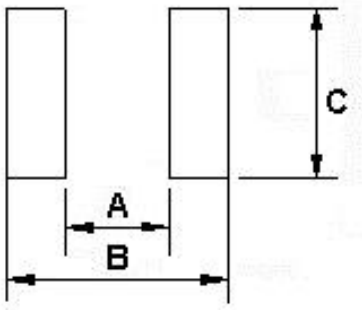

Dimensions in mm

TYPE	A	B	C
EHEI201608A	0.7	2.3	1.8

12 Note:

1. Please make sure that your product has been evaluated and confirmed against your specifications when our product is mounted to your product.
2. Do not knock nor drop.
3. All the items and parameters in this product specification have been prescribed on the premise that our product is used for the purpose,under the condition and in the environment agreed upon between you and us. You are requested not to use our product deviating from such agreement.
4. Please keep the distance between transformer/coil and other components (refer to the standard IEC 950)
5. After manufacturing process, there might be slight irregular shape on the edge of the products, and it's a normal phenomenon that can be neglectable.
6. The moisture sensitivity level (MSL) of products is classified as level 1.

EHEI201608A Series Specification

13 Curve:

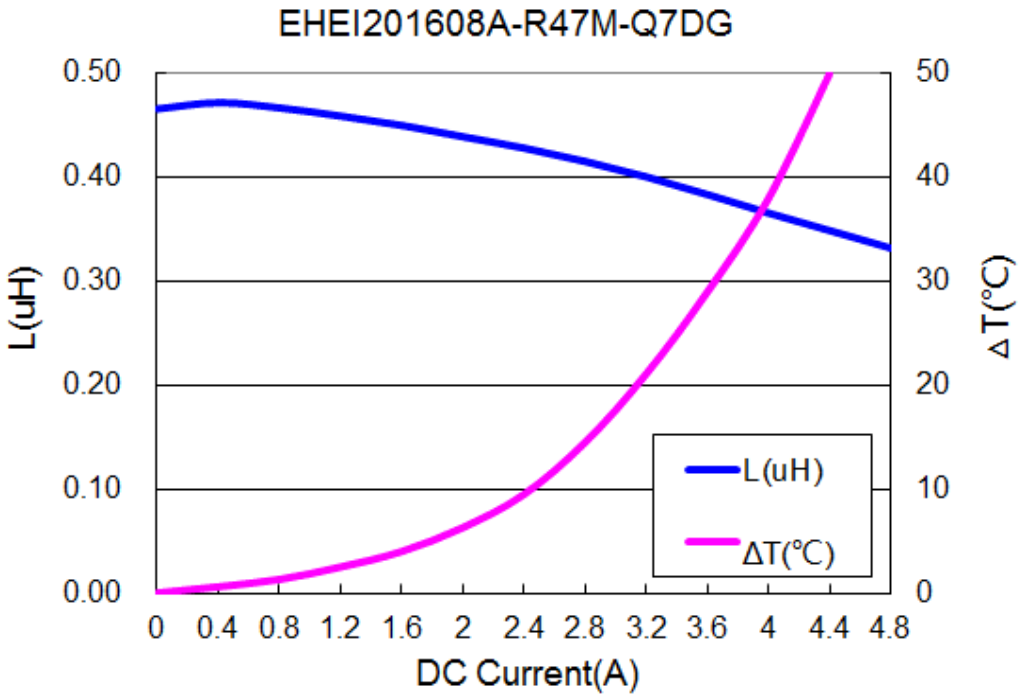

Unikeyic Electronics

Global Electronic Components Distributor

Click to view pricing, inventory, delivery, and lifecycle information:

Pulse Electronics:

PA2744NL PE-68386NLT ANT1204F007R0870A BSPQ000603041N4B00 DPX1608LKF3R2460A PA4341.221NLT PA4343.361NLT PA4343.451NLT PGL6395.121HLT BBUP00201209121Y00 JXD2-0Z10NL P0585NL W1902 AWCS0012070736NJ00 PAT6261.003NLT PD380-4000S1NF PD617-6000M243 W3078 W3334B0150 BSPQ000603043N0B00 PA4320.334NLT PE-67100NL W1093 PA0369NL PA4320.104NLT BDHE002520122R2MQ1 PA4341.301NLT PG2290.151HLT E5J88-032-02-L JXD0-2015NL