Downloaded from Arrow.com.

THIS DRAWING IS UNPUBLISHED. RELEASED FOR PUBLICATION 2016
© COPYRIGHT 2016 BY - ALL RIGHTS RESERVED.

REVISIONS					
P	LTR	DESCRIPTION	DATE	DWN	APVD
	C	PER ECN NO. 18067	4-11-91	G.D.	G.D.
	D	PER ECO-16-005712	07APR2016	J.O.	I.M.

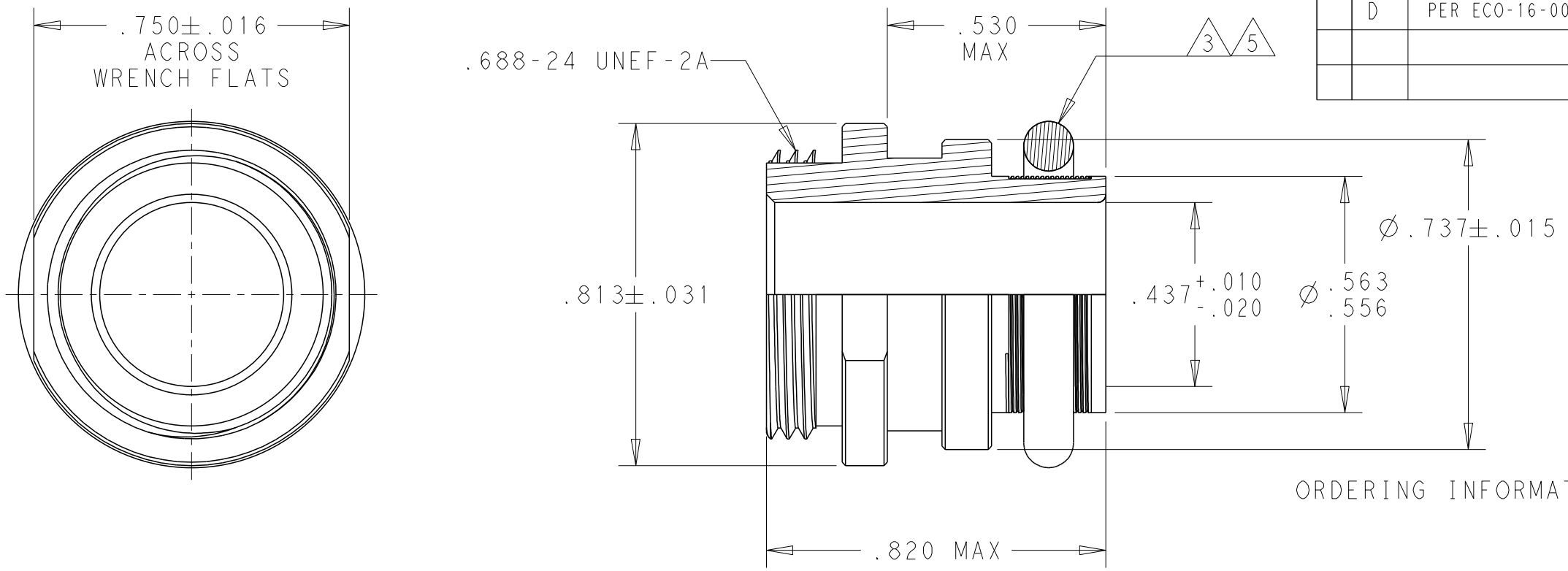

ORDERING INFORMATION

TXS01 A C 00-07 B I

- PRODUCT DEISGNATOR
- MATERIAL
  ALUMINUM ALLOY PER QQ-A-225
- FINISH (SEE S-CH00-0157-002)
- STRAIGHT ADAPTER
- ENTRY SIZE
- BRAID A: SINGLE LAYER 36 AWG
  BRAID B: SINGLE LAYER 30 AWG OR DOUBLE LAYER 36 AWG
- RING WITH INSULATING LINING

NOTES:

1. ALL DIMENSIONS ARE IN INCHES.
2. THIS PRODUCT IS DESIGNED TO TERMINATE TO A BRAIDED CABLE SHIELD AND A HEAT SHRINKABLE LIPPED BOOT TO A CONNECTOR.
3. SEE DRAWING 925076 FOR DETAIL ON THE TINEL-LOCK RING. RINGS DESIGNED TO BE HEATED ELECTRICALLY OR WITH A HOT AIR GUN. ALL RINGS ARE MARKED WITH THERMOCHROMIC PAINT WHICH CHANGES COLOR WHEN INSTALLATION TEMPTERATURE IS REACHED.
4. IDENTIFICATION TO BE IN ACCORDANCE WITH MIL-STD-130. MARKING TO INCLUDE CODE IDENT. NO. AND ASSEMBLY P/N LESS RING DESIGNATOR (E.G. 06090 TXS01AC00-07)
5. RINGS SHALL BEAR NO MARKING.
6. ADAPTER MATES TO: GC-329 CONNECTORS.

THIS DRAWING IS A CONTROLLED DOCUMENT.

DIMENSIONS: INCHES

TOLERANCES UNLESS OTHERWISE SPECIFIED:
0 PLC ±-
1 PLC ±.1
2 PLC ±.01
3 PLC ±.001
4 PLC ±.0001
ANGLES ±-

MATERIAL: SEE S-CH00-0157-002
FINISH: SEE S-CH00-0157-002

DWN J. OGGIER 06APR2016
CHK I. MYONG 07APR2016
APVD I. MYONG 08APR2016
PRODUCT SPEC -
APPLICATION SPEC CH00-0157-003
WEIGHT -

TE Connectivity

Raychem Adapter CUSTOMER DRAWING

NAME SPECIAL TINEL-LOCK BOOT ADAPTER

SIZE	CAGE CODE	DRAWING NO	RESTRICTED TO
A3	06090	C-TXS01	-

CUSTOMER DRAWING | SCALE 3:1 | SHEET 1 OF 1 | REV D