Superior Electric

5-WAY®
Binding Posts and SUPERCON® Electrical Connectors



VARIABLE TRANSFORMERS • VOLTAGE REGULATORS • POWER CONDITIONERS • LIGHTING CONTROLS • MOTION CONTROLS

Standard and Miniature Single Assembly

5-WAY® Binding Posts

5-WAY® Binding Posts have positive-stop captive thumbnuts that allow space to make connections yet reduce the likelihood of accidentally contacting current carrying parts. They are available in red, white, blue, yellow, black and green. BP31 fluted nut types have insulating parts of Lexan® polycarbonate resin which has a higher DC insulation resistance at all operating temperatures and significantly lower capacitance which provides greater resistance to high frequency leakage effects. All others have nylon plastic per MIL-P20693A, Type IV. Current carrying parts are gold, nickel or tin plated brass for improved conductivity and corrosion resistance. Metal parts are recessed for user and instrument protection and none touch the mounting panel. All are available in single packs or 100-quantity bulk packs. They are Underwriters Laboratories recognized components.

Standard Hex Nut and Fluted Nut Types - Rated for 30 A, 1000 V working.

Miniature Fluted Nut Types - Rated for 15A, 1000 V working.

Standard Hex Nut Type**	Standard Fluted Nut Type**	Miniature Fluted Nut Type**	Color Plastic Parts	Plating on Brass Parts
BP30R	BP31R	BP21R	Red	Gold
BP30WT	BP31WT	BP21WT	White	Gold
BP30BL	BP31BL	BP21BL	Blue	Gold
BP30Y	BP31Y	BP21Y	Yellow	Gold
BP30B	BP31B	BP21B	Black	Gold
BP30GN	BP31DG	BP21GN	Green	Gold

** Type numbers given are for binding posts with gold plated brass parts. For nickel plated brass parts add suffix N, for tin plated brass parts add suffix T; for example, BP30GNN (nickel) or BP30GNT (tin). Order single pack quantities by adding suffix "-1 PKG", for example BP21R-1 PKG; order bulk pack quantities by adding suffix "-B PKG", for example BP21R-B PKG.



TYPES BP30 and BP31 DIMENSIONS

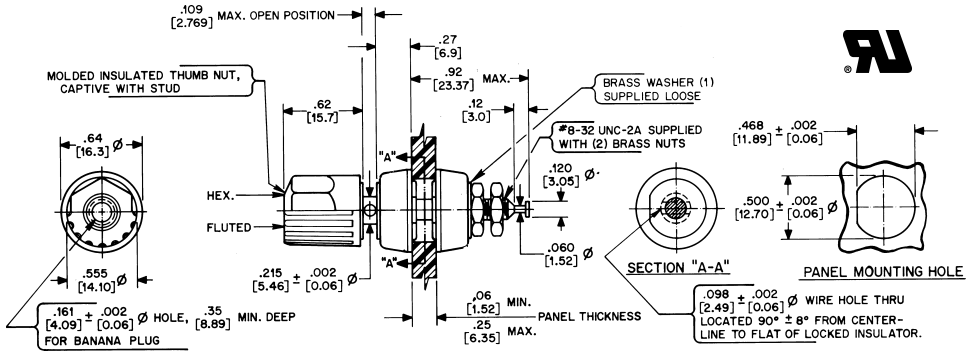

TYPE BP21 DIMENSIONS

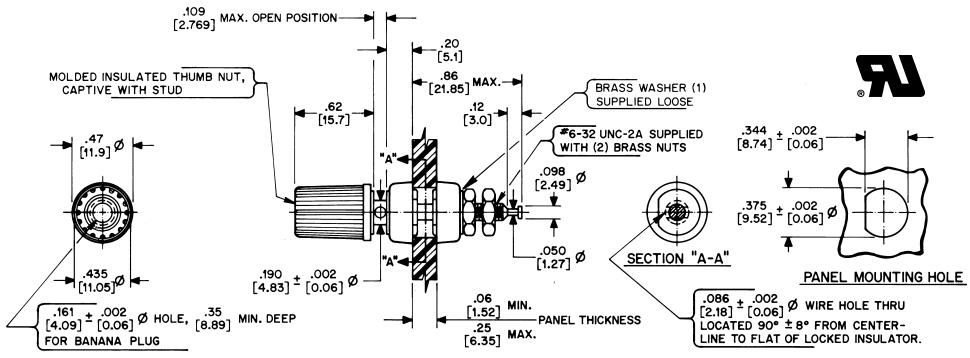

*Lexan is a General Electric Trademark

Larger Stud Single Assembly
5-WAY® Binding Posts

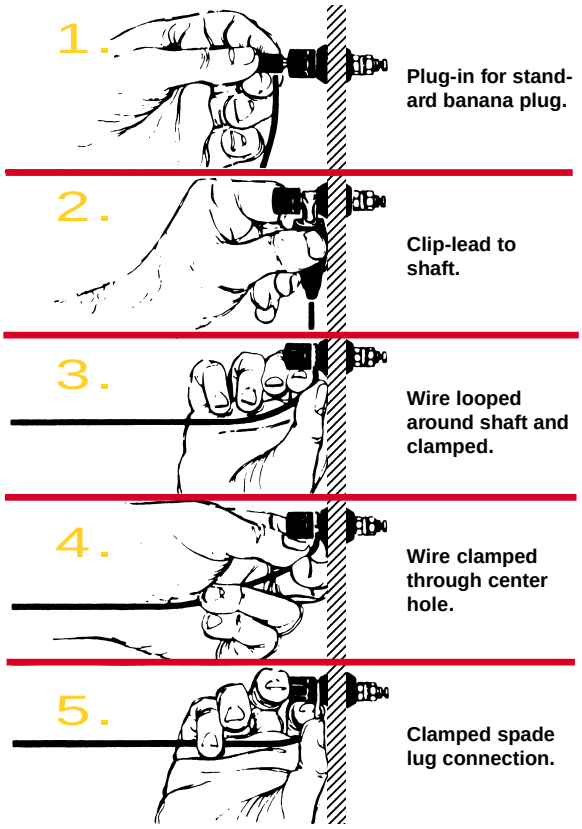

Larger stud single assembly types have the same features as types described on page 2 but have a larger #10-32 stud for behind the panel connections. Grounding type is made of polished nickel plated brass.

Larger Stud Hex Nut and Fluted Nut Types - Rated for 30A, 1000 V working.

All Metal Grounding Type BP30GP10 - For making rapid connections to ground.

Larger Stud Hex Nut Type**	Larger Stud Fluted Nut Type**	Color of Plastic Parts	Plating On Brass Parts
BP30-10R	BP31-10R	Red	Gold
BP30-10WT	BP31-10WT	White	Gold
BP30-10BL	BP31-10BL	Blue	Gold
BP30-10Y	BP31-10Y	Yellow	Gold
BP30-10B	BP31-10B	Black	Gold
BP30-10GN	BP31-10DG	Green	Gold
BP30GP10	N/A	N/A	Nickel

** Type numbers given are for larger stud binding posts with gold plated brass parts, except BP30GP10 which is nickel plated. For nickel plated brass parts add suffix N, for tin plated brass parts add suffix T; for example, PB30-10GNN (nickel) or BP30-10GNT (tin). Order single pack quantities by adding suffix "-1 PKG", for example BP30-10B-1 PKG; order bulk pack quantities by adding suffix" -B PKG", for example BP30-10B-B PKG.



TYPES BP30-10 and BP31-10 DIMENSIONS

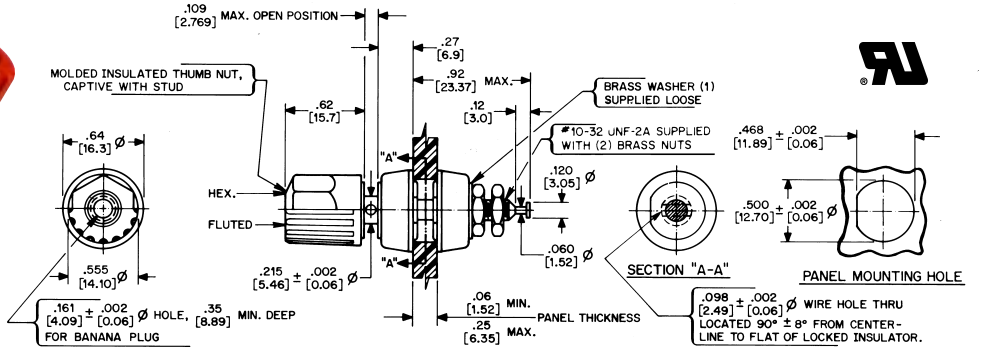



TYPE BP30GP10 DIMENSIONS

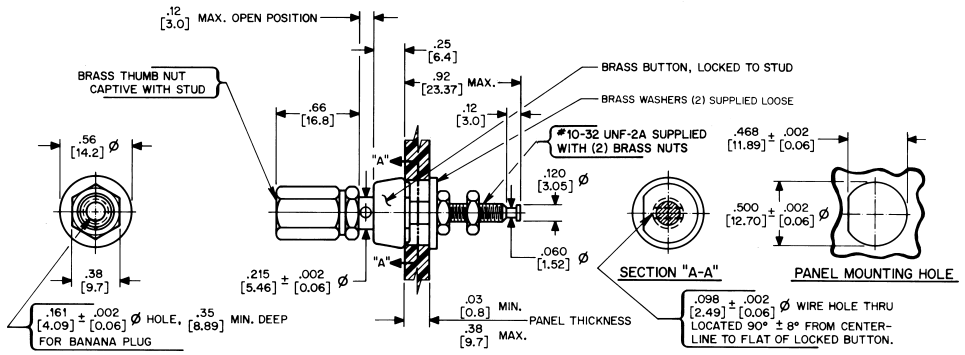

Standard, Miniature and Larger Stud Double Assembly

5-WAY® Binding Posts

Double Assembly 5-WAY® Binding Posts are designed for faster, more accurate mounting on 3/4-inch (19mm) centers. Conventional miniature, standard and larger stud types have panel insulating parts in black only. Thumbnuts are available in color combinations of red and black, black and black and red and red. Plastic insulating parts have the same characteristics as single types. Metal parts are available in gold, nickel or tin plated brass parts.

Double assembly types are available in single packs or in 10-quantity bulk packs. All are Underwriters Laboratories recognized components.

Standard Hex Nut and Fluted Nut Types - Rated for 30 A, 1000 V working.

Miniature Fluted Nut Types - Rated for 15A, 1000 V working.

Thumbnuts		Plating on Brass Parts	TYPE*	Max. Amps	Insulator Color
Design	**Colors**				
Miniature (#6-32 UNC-2A Stud)					
Fluted	Black & Black	Gold Nickel Tin	BP21-2BB BP21-2BBN BP21-2BBT	15	Black
	Red & Red	Gold Nickel Tin	BP21-2RR BP21-2RRN BP21-2RRT		
	Black & Red	Gold Nickel Tin	BP21-2BR BP21-2BRN BP21-2BRT		
Standard (#8-32 UNC-2A Stud)					
Hex	Black & Black	Gold Nickel Tin	BP30-2BB BP30-2BBN BP30-2BBT	30	Black
	Red & Red	Gold Nickel Tin	BP30-2RR BP30-2RRN BP30-2RRT		
	Black & Red	Gold Nickel Tin	BP30-2BR BP30-2BRN BP30-2BRT		
Fluted	Black & Black	Gold NIckel Tin	BP31-2BB BP31-2BBN BP31-2BBT	30	Black
	Red & Red	Gold NIckel Tin	BP31-2RR BP31-2RRN BP31-2RRT		
	Black & Red	Gold NIckel Tin	BP31-2BR BP31-2BRN BP31-2BRT		
Larger Stud (#10-32 UNF-2A Stud)					
Hex	Black & Black	Gold NIckel Tin	BP30-2BB10 BP30-2BB10N BP30-2BB10T	30	Black
	Red & Red	Gold NIckel Tin	BP30-2RR10 BP30-2RR10N BP30-2RR10T		
	Black & Red	Gold NIckel Tin	BP30-2BR10 BP30-2BR10N BP30-2BR10T		
Fluted	Black & Black	Gold NIckel Tin	BP31-2BB10 BP31-2BB10N BP31-2BB10T	30	Black
	Red & Red	Gold NIckel Tin	BP31-2RR10 BP31-2RR10N BP31-2RR10T		
	Black & Red	Gold NIckel Tin	BP31-2BR10 BP31-2BR10N BP31-2BR10T		

* Order single pack quantities by adding suffix “-1 PKG”, for example BP30-2BB-1 PKG; order bulk pack quantities by adding suffix “-B PKG”, for example BP30-2BB-B PKG.

Standard, Miniature and Larger Stud Double Assembly

5-WAY® Binding Posts

TYPE BP21-2BR DIMENSIONS



BP21-2BR

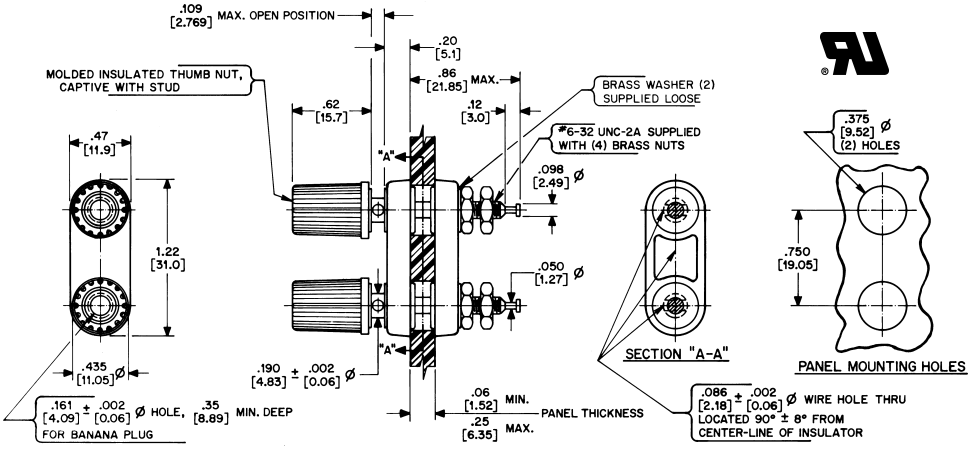

TYPE BP30-2BR DIMENSIONS



BP30-2BR

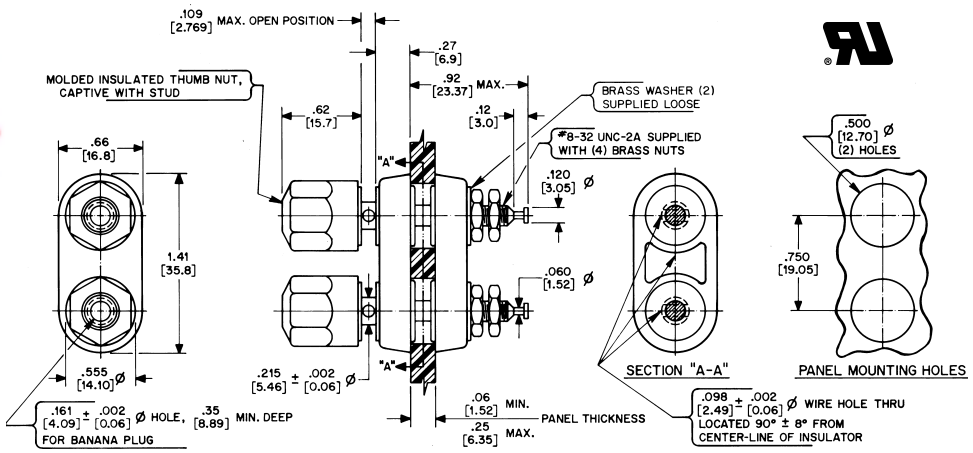

TYPE BP30-2BR10 DIMENSIONS



BP30-2BR10

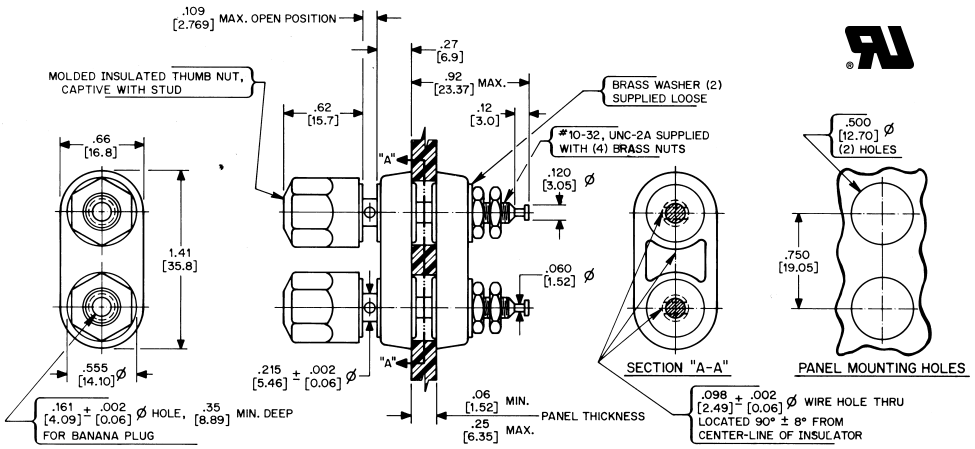

Custom Color Ring
5-WAY® Binding Posts

All cataloged Custom Color Ring Series types have neutral gray plastic insulating parts. Single assembly types have thumbnut-imbedded rings in red, white, blue, yellow, black or green plastic while double assembly types have thumbnut color rings in black-red only. All are available with current carrying parts in gold, nickel or tin plated brass. BP31 Series fluted nut types have insulating parts molded of Lexan polycarbonate resin which has a higher DC insulation resistance at all operating temperatures and significantly lower capacitance which provides greater resistance to high frequency leakage effects. All others have nylon plastic per MIL-P-20693A, Type IV. All types with "-10" in the suffix have larger 10-32 studs for making behind the panel connections. Contingent upon minimum quantity requirements, insulating part color can be customized. Inquiries are invited. Single assembly types are available in single packs or 100-quantity bulk packs; double assembly types are available in single packs or 10-quantity bulk packs. They are Underwriters Laboratories recognized components.

Single Assembly Standard Hex Nut and Fluted Nut Types - Rated for 30 A, 1000 V working.

Single Assembly Miniature Fluted Nut Types - Rated for 15A, 1000 V working.

Double Assembly Standard Hex Nut and Fluted Nut Types - Rated for 30 A, 1000 V working.

Double Assembly Miniature Fluted Nut Types - Rated for 15A, 1000 V working.



SINGLE ASSEMBLY TYPES

Type†	Description	Plating On Brass	Thread Size
BP21GY1*	Miniature Fluted Nut	Gold	6-32
BP30GY1*	Standard Hex Nut	Gold	8-32
BP31GY1**	Standard Fluted Nut	Gold	8-32
BP30GY1-10*	Standard Hex Nut	Gold	10-32
BP31GY1-10**	Standard Fluted Nut	Gold	10-32

DOUBLE ASSEMBLY TYPES

BP21GY1-2BR	Miniature Fluted Nut	Gold	6-32
BP30GY1-2BR	Standard Hex Nut	Gold	8-32
BP31GY1-2BR	Standard Fluted Nut	Gold	8-32
BP30GY1-2BR10	Standard Hex Nut	Gold	10-32
BP31GY1-2BR10	Standard Fluted Nut	Gold	10-32

* Enter desired ring color code: R (red), B (black), BL (blue), GN (green), WT (white), Y (yellow).

** Enter desired ring color code: R (red), B (black), BL (blue), DG (green), WT (white), Y (yellow).

† Type numbers given are for binding posts with gold plated brass parts. For nickel plated brass parts add suffix N, for tin plated brass parts add suffix T; for example, BP30GY1RN (nickel) or BP30GY1RT (tin). Order single pack quantities by adding suffix "-1 PKG", for example BP21GY1R-1 PKG; order bulk pack quantities by adding suffix "-B PKG", for example BP21GY1R-B PKG.

See pages 2, 3, 4 and 5 for complete outline dimensions

SUPERCON®
Electrical Connectors

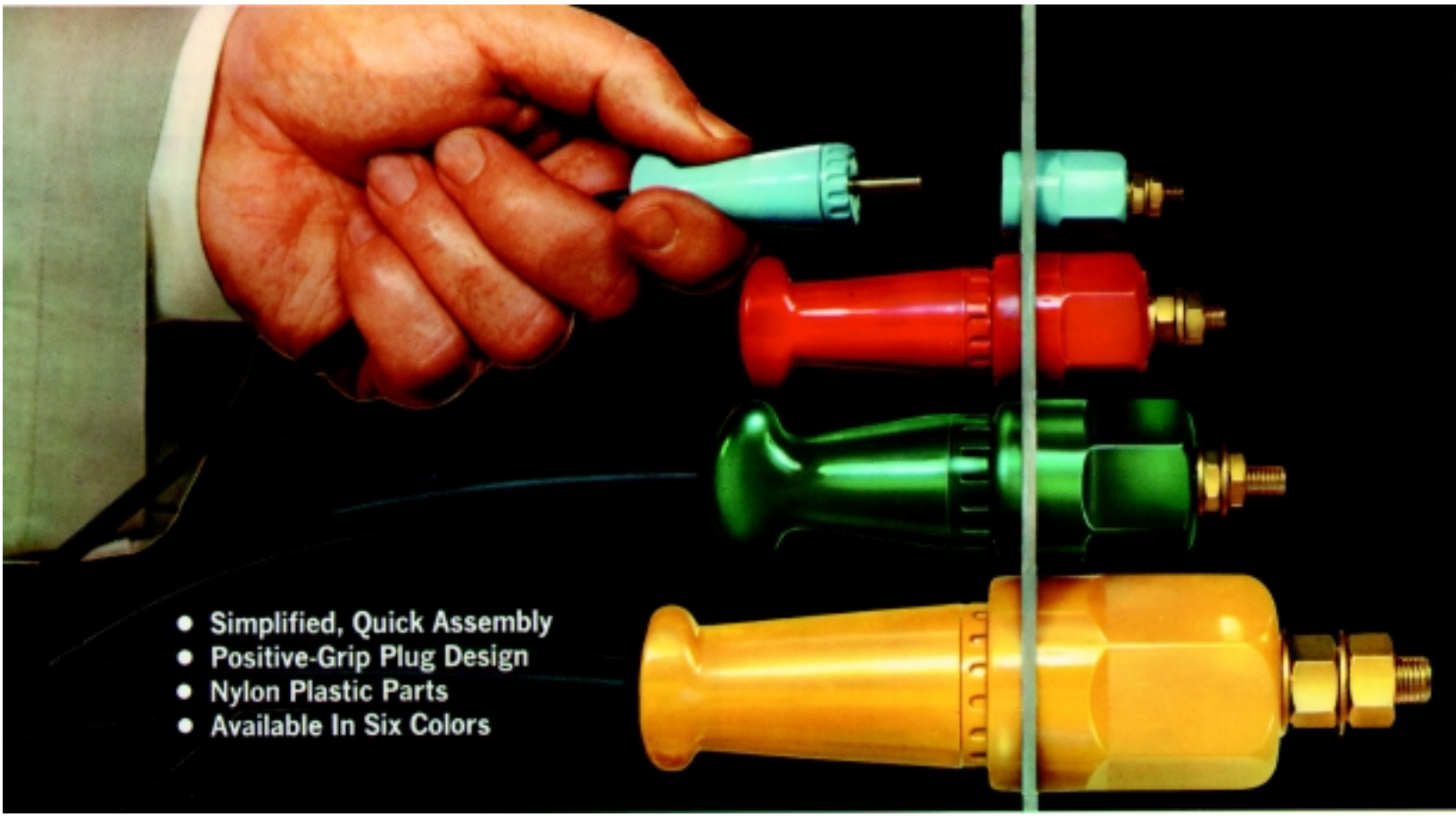

SUPERCON® Electrical Connectors incorporate many advanced engineering features designed to provide safe, rapid and positive panelboard connections. Single conductor socket and pin type plugs and receptacles are offered in 25, 50, 100 and 250 Amp capacities.

The 25, 50 and 100 Amp types are rated 125-250 VAC or DC current interrupting, 600 V unenergized connect or disconnect use only; 250 Amp types are rated 600 V unenergized connect or disconnect use only. The 25, 50 and 100 Amp types are CSA certified under file No. LR-17812.

PLUGS - Plugs have a unique functionally designed grip for handling ease and convenience. The variety of red, white, blue, yellow, black or green colors permits wider latitude in patchboard distribution layouts. Wiring connection to the same plug can be either soldered or solderless. Cable fastening screws are provided which permit a range of cable sizes to be accommodated by the plug. All plug grips are of a simple, two-piece threaded construction for quick assembly.

RECEPTACLES - Receptacles have color-matched nylon caps and bodies. All plastic parts of a receptacle are molded through in the same color to permit more rapid and accurate circuit identification on both the front and back of the panel when installed. Wiring connections are made to a threaded stud by wire wraparound, by lug or bus bar connection.



SUPERCON®
Electrical Connectors



PP25GR



RS25GR



PS25GWT



RP25GWT

25 AMPERE TYPES				
COLOR	SOCKET RECEPTACLE	PIN PLUG	PIN RECEPTACLE	SOCKET PLUG
BLACK	RS25GB	PP25GB	RP25GB	PS25GB
YELLOW	RS25GY	PP25GY	RP25GY	PS25GY
RED	RS25GR	PP25GR	RP25GR	PS25GR
BLUE	RS25GBL	PP25GBL	RP25GBL	PS25GBL
GREEN	RS25GGN	PP25GGN	RP25GGN	PS25GGN
WHITE	RS25GWT	PP25GWT	RP25GWT	PS25GWT



PP50GY



RS50GY



PS50GBL



RP50GBL

50 AMPERE TYPES				
COLOR	SOCKET RECEPTACLE	PIN PLUG	PIN RECEPTACLE	SOCKET PLUG
BLACK	RS50GB	PP50GB	RP50GB	PS50GB
YELLOW	RS50GY	PP50GY	RP50GY	PS50GY
RED	RS50GR	PP50GR	RP50GR	PS50GR
BLUE	RS50GBL	PP50GBL	RP50GBL	PS50GBL
GREEN	RS50GGN	PP50GGN	RP50GGN	PS50GGN
WHITE	RS50GWT	PP50GWT	RP50GWT	PS50GWT



PP100GB



RS100GB



PS100GGN



RP100GGN

100 AMPERE TYPES				
COLOR	SOCKET RECEPTACLE	PIN PLUG	PIN RECEPTACLE	SOCKET PLUG
BLACK	RS100GB	PP100GB	RP100GB	PS100GB
YELLOW	RS100GY	PP100GY	RP100GY	PS100GY
RED	RS100GR	PP100GR	RP100GR	PS100GR
BLUE	RS100GBL	PP100GBL	RP100GBL	PS100GBL
GREEN	RS100GGN	PP100GGN	RP100GGN	PS100GGN
WHITE	RS100GWT	PP100GWT	RP100GWT	PS100GWT

25 AMPERE TYPES OUTLINES

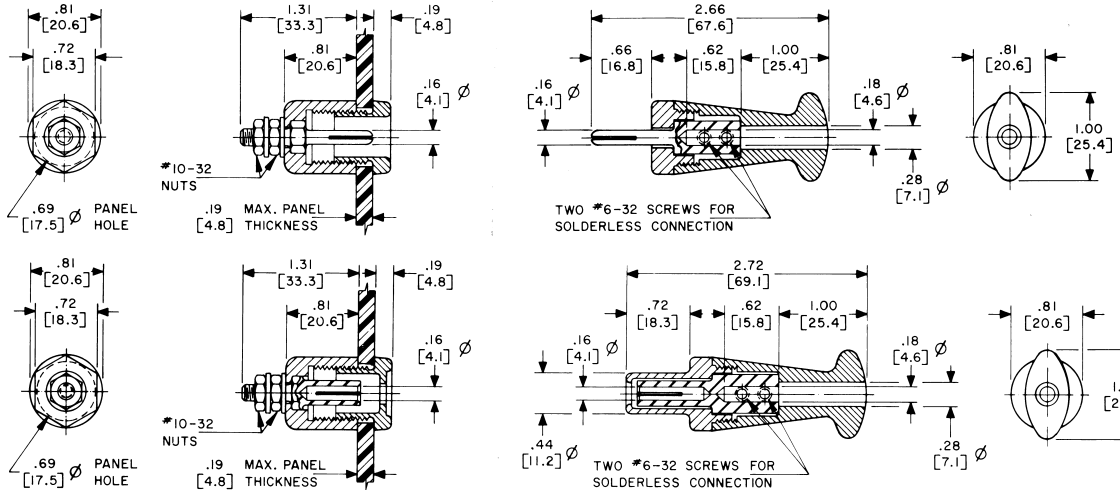

50 AMPERE TYPES OUTLINES

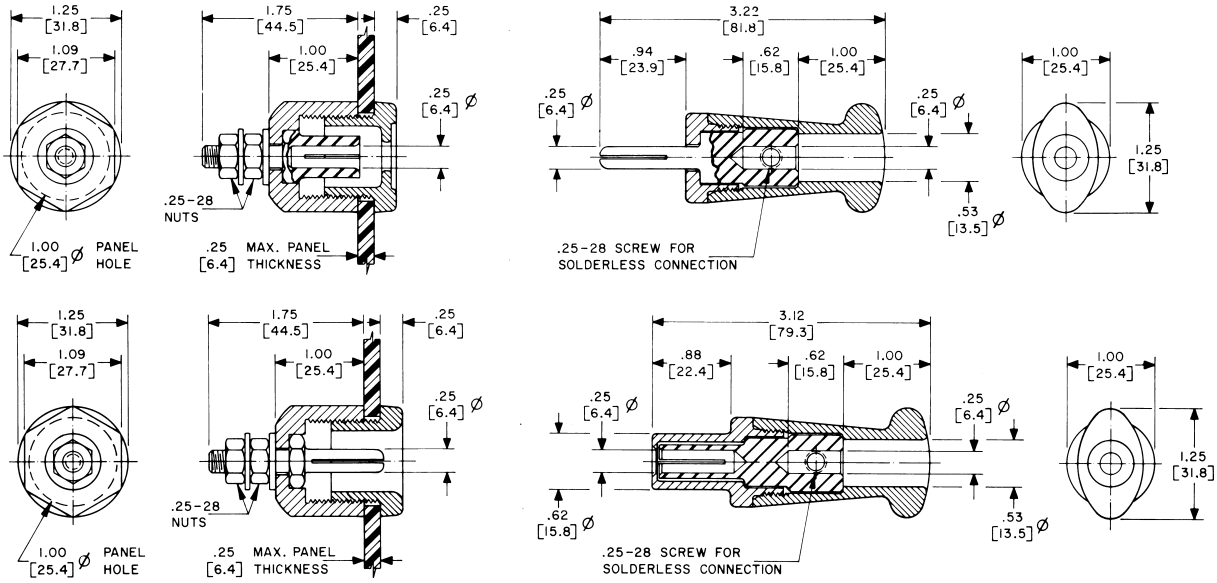

100 AMPERE TYPES OUTLINES

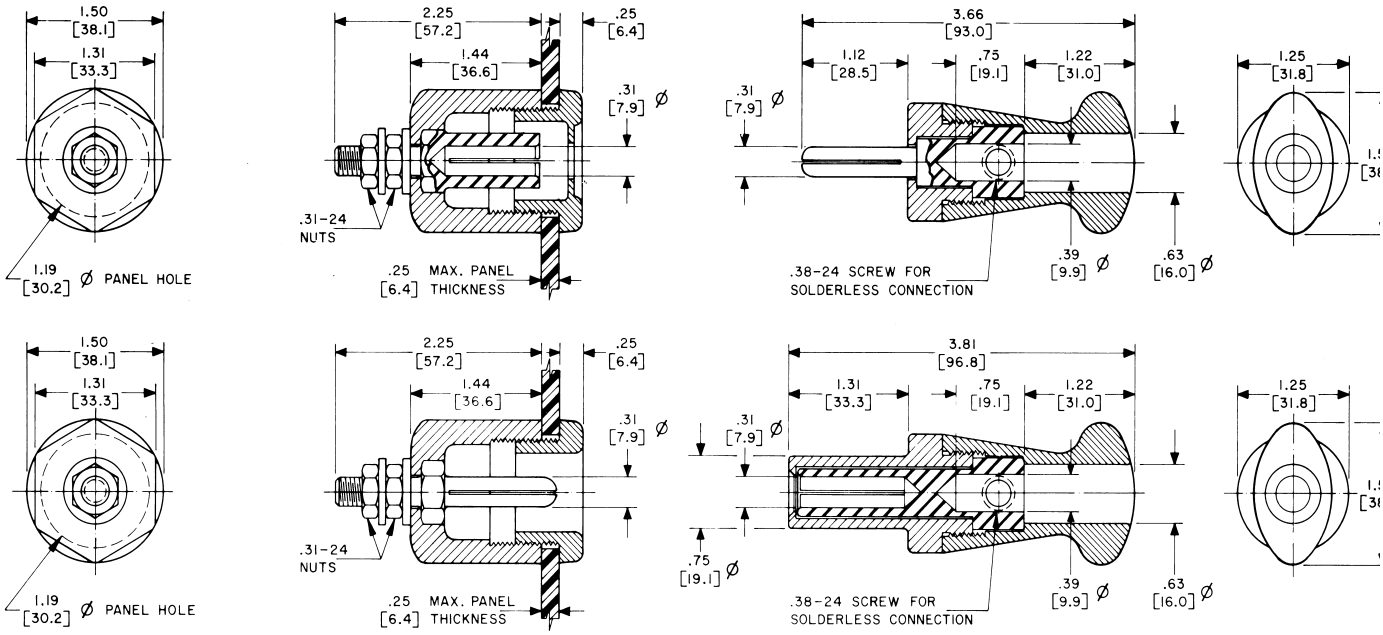

SUPERCON®
Electrical Connectors



PP250GY



RS250GY



PS250GR



RP250GR

250 AMPERE TYPES				
COLOR	SOCKET RECEPTACLE	PIN PLUG	PIN RECEPTACLE	SOCKET PLUG
BLACK	RS250GB	PP250GB	RP250GB	PS250GB
YELLOW	RS250GY	PP250GY	RP250GY	PS250GY
RED	RS250GR	PP250GR	RP250GR	PS250GR
BLUE	RS250GBL	PP250GBL	RP250GBL	PS250GBL
GREEN	RS250GGN	PP250GGN	RP250GGN	PS250GGN
WHITE	RS250GWT	PP250GWT	RP250GWT	PS250GWT

250 AMPERE TYPES OUTLINES

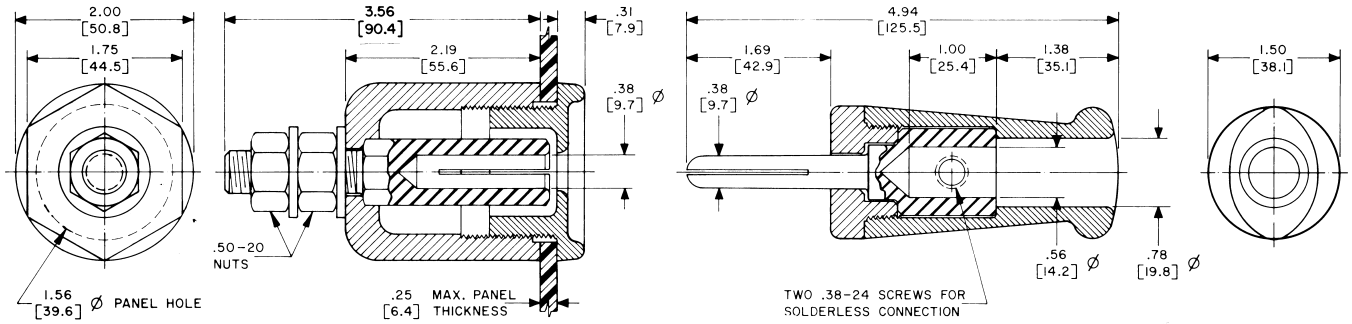

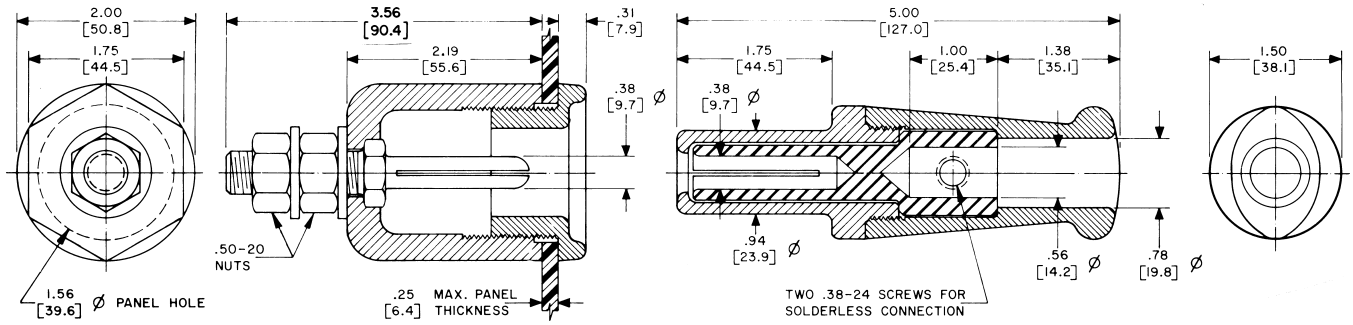

Other Voltage Control Products

STABILINE® Power Protection Products

STABILINE® Power Protection Products include cabinet and rack mount WHR Series Voltage Regulators with ratings to 1680 kVA, SW and SPW Series Uninterruptible Power Supplies that regulate voltage and provide battery backup in event of power failure, PPC Series Power Conditioners to protect from power sags, spikes and surges.





POWERSTAT® Variable Transformers

The most recognized brand in the technology, the POWERSTAT® Variable Transformer line includes 31 series in either single or three phase 120, 240 or 480 V types in ratings from 0.13 to 365 kVA. They are available in manual and motor driven, portable with and without meters, open and enclosed models. Epoxy-coated POWERKOTE® Coils give 20% average higher current ratings, greater overload capacity.

LUXTROL® Light Controls

LUXTROL® Light Controls are available for the control of incandescent lighting. Types include wallbox style manual WBD Series in ratings to 1800 watts and manual and motor driven 2000 and 5000 watt D series.

Distribution Coast-to-Coast and International

Superior Electric products are available worldwide through an extensive authorized distributor network. These distributors offer literature, technical assistance and a wide range of models off the shelf for fastest possible delivery and service.

In addition, Superior Electric sales representatives are available to provide prompt attention to customer needs. Call or fax for ordering and application information or for the name and address of the nearest authorized distributor.

383 Middle Street
Bristol, CT 06010 USA
Tel: 860-585-4500
Fax: 860-582-3784
Web: www.superiorelectric.com

Toll Free in USA and Canada

Customer Service: 1-800-787-3532 - Ext. 4750
Product Application: 1-800-787-3532 - Ext. 4755
Product Literature Requests: 1-800-787-3532 - Ext. 4750
Fax: 1-800-821-1369

Superior Electric

383 Middle Street • Bristol, CT 06010 USA
Tel: 860.585.4500 • Fax: 860.584.1483

REGISTERED COMPANY ISO 9001 SGS
Manufactured Under an ISO9001 Compliant Quality Management System