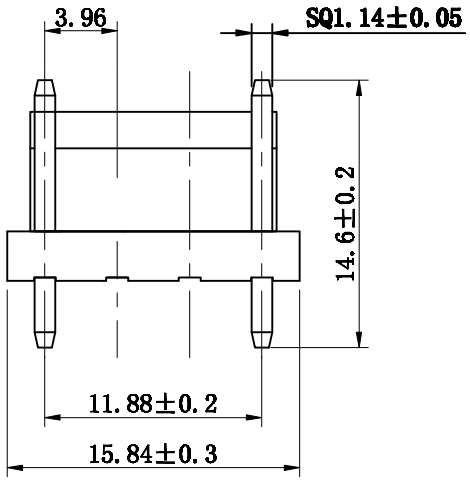

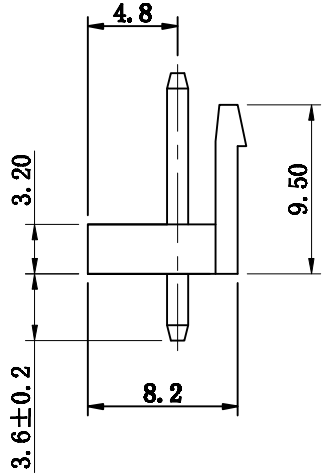

SPECIFCATION

Current rating：5A AC/DC
Voltage rating:：250V AC/DC
Contact resistance：20mΩmax.
Withstand voltage：1500V AC/min.
Insulation resistance：1000MΩ/min.
Temperature range：-25℃～+85℃

Material:
Post:Brass.Tin/plated
Base:Nylon66 UL94V-0 or V-2

TOLERANCE TABLE	
.0	±0.30
.00	±0.20
.000	±0.05

APPROVED:	DATE:	Ckmtw 深圳市灿科盟实业有限公司 CHANKEMENG INDUSTRYCO.,LTD
CHECKED:	DATE:	TITLE: 3962S-4P 空第2，3P
DRAWN: LYF	DATE: 2008-04-07	CLIENT P/N C2940220
		UNIT mm SCALE free
		FILE NO. Ckmtw-3962-0033 REV. A WD00

Unikeyic Electronics

Global Electronic Components Distributor

Click to view pricing, inventory, delivery, and lifecycle information:

Ckmtw:

W-2510S04P-0000 DDMRH15PFE006 B-2100S32P-B110 B-2200S14P-A120 B-2100S02P-A110 B-2100S06P-B110 B-2100S10P-A110 B-2100S16P-B110 B-2202R40P-A120 B-3002S14P-0110 S082520012 B-2102S50P-B120 B-2100N06P-B111 B-2100S03P-A110 R-RJ45S08P-B200 S082540002 B-3002S40P-0110 D-DMR009PM-D002 R-RJ45S08P-B000 S152920020 B-2201S50P-A120 9-EDK0009P-0000 S191020002 F-FPC0M30P-A310 B-2200S07P-A120 B-2202N10P-B121 B-2100R28P-B110 B-3100S24P-A110 B-3100S30P-A110 F-FPC1M18P-A310