Document Title

512Kx8 Bit High Speed Static RAM(5.0V Operating).
Operated at Commercial and Industrial Temperature Ranges.

Revision History

RevNo.	History	Draft Data	Remark
Rev. 0.0	Initial release with Preliminary.	September. 7. 2001	Preliminary
Rev. 0.1	Change Icc. Isb and Isb1	November, 3. 2001	Preliminary

Item		Previous	Current
I_{CC}(Commercial)	10ns	90mA	65mA
	12ns	80mA	55mA
	15ns	70mA	45mA
I_{CC}(Industrial)	10ns	115mA	85mA
	12ns	100mA	75mA
	15ns	85mA	65mA
I_{SB}		30mA	20mA
I_{SB1}(Normal)		10mA	5mA

Rev. 0.2	1. Correct AC parameters : Read & Write Cycle 2. Corrrect Power part : Delete "P-Industrial,Low Power" part 3. Delete Data Retention Characteristics	November, 23. 2001	Preliminary
Rev. 0.3	1. Delete 15ns speed bin. 2. Change Icc for Industrial mode.	December, 18. 2001	Preliminary

Item		Previous	Current
I_{CC}(Industrial)	10ns	85mA	75mA
	12ns	75mA	65mA

Rev. 1.0	1. Final datasheet release. 2. Delete 12ns speed bin. 3. Delete $\overline{UB}$,$\overline{LB}$ releated AC characteristics and timing diagram. 4. Correct Read Cycle time waveform(2).	July, 09, 2002	Final
Rev. 2.0	1. Add the Lead Free Package type.	July. 26, 2004	Final

The attached data sheets are prepared and approved by SAMSUNG Electronics. SAMSUNG Electronics CO., LTD. reserve the right to change the specifications. SAMSUNG Electronics will evaluate and reply to your requests and questions on the parameters of this device. If you have any questions, please contact the SAMSUNG branch office near your office, call or contact Headquarters.

Downloaded from Arrow.com.

4Mb Async. Fast SRAM Ordering Information

Org.	Part Number	VDD(V)	Speed (ns)	PKG	Temp. & Power
1M x4	K6R4004C1D-J(K)C(I) 10	5	10	J : 32-SOJ K : 32-SOJ(LF)	C : Commercial Temperature ,Normal Power Range I : Industrial Temperature ,Normal Power Range L : Commercial Temperature ,Low Power Range P : Industrial Temperature ,Low Power Range
	K6R4004V1D-J(K)C(I) 08/10	3.3	8/10		
512K x8	K6R4008C1D-J(K,T,U)C(I) 10	5	10	J : 36-SOJ K : 36-SOJ(LF) T : 44-TSOP2 U : 44-TSOP2(LF)	
	K6R4008V1D-J(K,T,U)C(I) 08/10	3.3	8/10		
256K x16	K6R4016C1D-J(K,T,U,E)C(I) 10	5	10	J : 44-SOJ K : 44-SOJ(LF) T : 44-TSOP2 U : 44-TSOP2(LF) E : 48-TBGA	
	K6R4016V1D-J(K,T,U,E)C(I,L,P) 08/10	3.3	8/10		

Downloaded from Arrow.com.

512K x 8 Bit High-Speed CMOS Static RAM

FEATURES

- Fast Access Time 10ns(Max.)
- Low Power Dissipation
  Standby (TTL) : 20mA(Max.)
  (CMOS) : 5mA(Max.)
  Operating K6R4008C1D-10 : 65mA(Max.)
- Single 5.0V±10% Power Supply
- TTL Compatible Inputs and Outputs
- Fully Static Operation
  - No Clock or Refresh required
- Three State Outputs
- Center Power/Ground Pin Configuration
- Standard Pin Configuration
  K6R4008C1D-J : 36-SOJ-400
  K6R4008C1D-K : 36-SOJ-400(Lead-Free)
  K6R4008C1D-T : 44-TSOP2-400BF
  K6R4008C1D-U : 44-TSOP2-400BF(Lead-Free)
- Operating in Commercial and Industrial Temperature range.

GENERAL DESCRIPTION

The K6R4008C1D is a 4,194,304-bit high-speed Static Random Access Memory organized as 524,288 words by 8 bits. The K6R4008C1D uses 8 common input and output lines and has an output enable pin which operates faster than address access time at read cycle. The device is fabricated using SAMSUNG′s advanced CMOS process and designed for high-speed circuit technology. It is particularly well suited for use in high-density high-speed system applications. The K6R4008C1D is packaged in a 400 mil 36-pin plastic SOJ and 44-pin plastic TSOP type II.

FUNCTIONAL BLOCK DIAGRAM

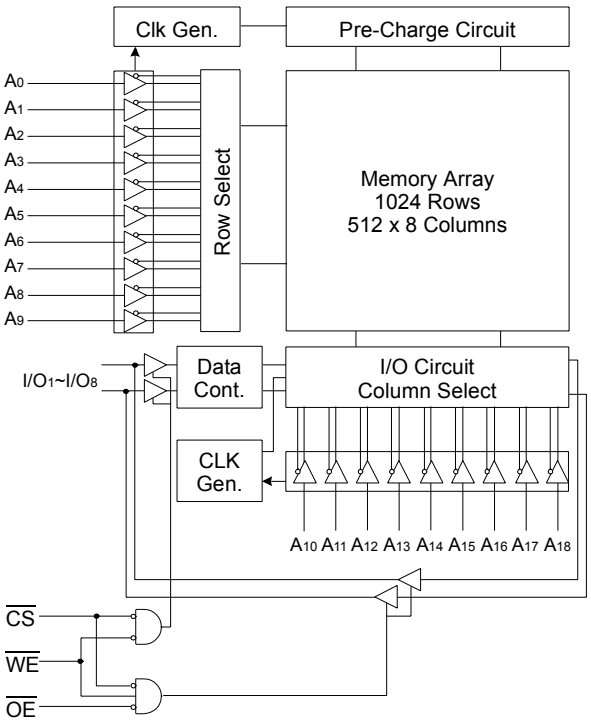

SAMSUNG ELECTRONICS

Downloaded from Arrow.com.

PIN CONFIGURATION *(Top View)*

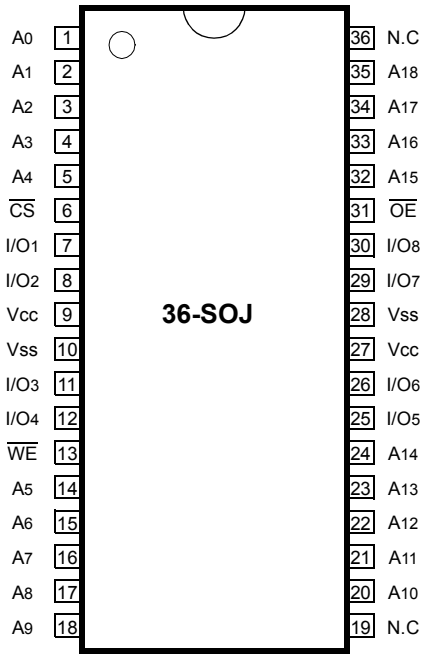

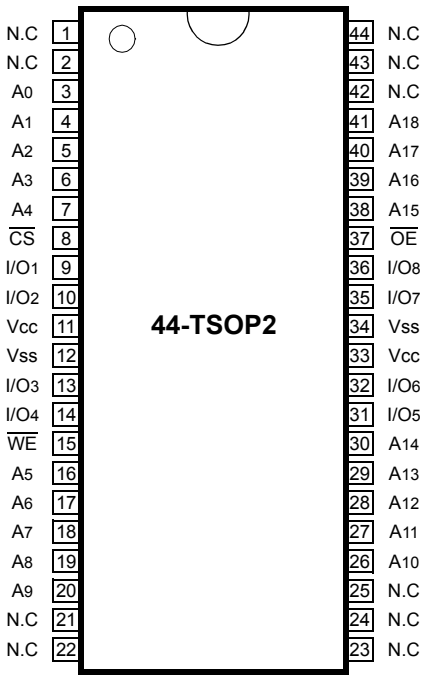

PIN FUNCTION

Pin Name	Pin Function
A_0 - A_{18}	Address Inputs
$\overline{WE}$	Write Enable
$\overline{CS}$	Chip Select
$\overline{OE}$	Output Enable
I/O_1 ~ I/O_8	Data Inputs/Outputs
V_{CC}	Power(+5.0V)
V_{SS}	Ground
N.C	No Connection

ABSOLUTE MAXIMUM RATINGS*

Parameter		Symbol	Rating	Unit
Voltage on Any Pin Relative to V_{SS}		V_{IN}, V_{OUT}	-0.5 to V_{CC}+0.5	V
Voltage on V_{CC} Supply Relative to V_{SS}		V_{CC}	-0.5 to 7.0	V
Power Dissipation		P_D	1.0	W
Storage Temperature		T_{STG}	-65 to 150	°C
Operating Temperature	Commercial	T_A	0 to 70	°C
	Industrial	T_A	-40 to 85	°C

* Stresses greater than those listed under "Absolute Maximum Ratings" may cause permanent damage to the device. This is a stress rating only and functional operation of the device at these or any other conditions above those indicated in the operating sections of this specification is not implied. Exposure to absolute maximum rating conditions for extended periods may affect reliability.

Downloaded from Arrow.com.

RECOMMENDED DC OPERATING CONDITIONS*(T_A=0 to 70°C)

Parameter	Symbol	Min	Typ	Max	Unit
Supply Voltage	V_{CC}	4.5	5.0	5.5	V
Ground	V_{SS}	0	0	0	V
Input High Voltage	V_{IH}	2.2	-	V_{CC}+0.5***	V
Input Low Voltage	V_{IL}	-0.5**	-	0.8	V

* The above parameters are also guaranteed at industrial temperature range.
** V_{IL}(Min) = -2.0V a.c(Pulse Width ≤ 8ns) for I ≤ 20mA.
*** V_{IH}(Max) = V_{CC} + 2.0V a.c (Pulse Width ≤ 8ns) for I ≤ 20mA

DC AND OPERATING CHARACTERISTICS*(T_A=0 to 70°C, Vcc=5.0V±10%, unless otherwise specified)

Parameter	Symbol	Test Conditions			Min	Max	Unit
Input Leakage Current	I_{LI}	V_{IN}=V_{SS} to V_{CC}			-2	2	µA
Output Leakage Current	I_{LO}	$\overline{CS}$=V_{IH} or $\overline{OE}$=V_{IH} or $\overline{WE}$=V_{IL} V_{OUT}=V_{SS} to V_{CC}			-2	2	µA
Operating Current	I_{CC}	Min. Cycle, 100% Duty $\overline{CS}$=V_{IL}, V_{IN}=V_{IH} or V_{IL}, I_{OUT}=0mA	Com.	10ns	-	65	mA
			Ind.	10ns	-	75	
Standby Current	I_{SB}	Min. Cycle, $\overline{CS}$=V_{IH}			-	20	mA
	I_{SB1}	f=0MHz, $\overline{CS}$≥V_{CC}-0.2V, V_{IN}≥V_{CC}-0.2V or V_{IN}≤0.2V			-	5	
Output Low Voltage Level	V_{OL}	I_{OL}=8mA			-	0.4	V
Output High Voltage Level	V_{OH}	I_{OH}=-4mA			2.4	-	V

* The above parameters are also guaranteed at industrial temperature range.

CAPACITANCE*(T_A=25°C, f=1.0MHz)

Item	Symbol	Test Conditions	TYP	Max	Unit
Input/Output Capacitance	$C_{I/O}$	$V_{I/O}$=0V	-	8	pF
Input Capacitance	C_{IN}	V_{IN}=0V	-	6	pF

* Capacitance is sampled and not 100% tested.

Downloaded from Arrow.com.

AC CHARACTERISTICS(T_A=0 to 70°C, V_{CC}=5.0V±10%, unless otherwise noted.)

TEST CONDITIONS*

Parameter	Value
Input Pulse Levels	0V to 3V
Input Rise and Fall Times	3ns
Input and Output timing Reference Levels	1.5V
Output Loads	See below

*The above test conditions are also applied at industrial temperature range.

Output Loads(A)

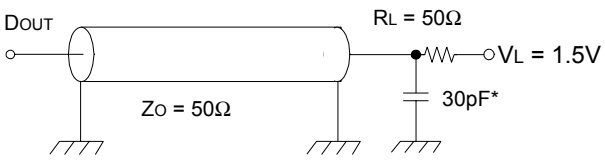

* Capacitive Load consists of all components of the test environment.

Output Loads(B)
for t_{HZ}, t_{LZ}, t_{WHZ}, t_{OW}, t_{OLZ} & t_{OHZ}

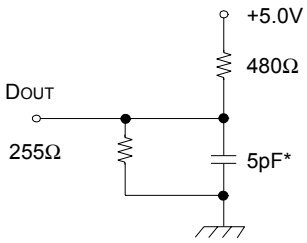

* Including Scope and Jig Capacitance

READ CYCLE*

Parameter	Symbol	K6R4008C1D-10		Unit
		Min	Max	
Read Cycle Time	t_{RC}	10	-	ns
Address Access Time	t_{AA}	-	10	ns
Chip Select to Output	t_{CO}	-	10	ns
Output Enable to Valid Output	t_{OE}	-	5	ns
Chip Enable to Low-Z Output	t_{LZ}	3	-	ns
Output Enable to Low-Z Output	t_{OLZ}	0	-	ns
Chip Disable to High-Z Output	t_{HZ}	0	5	ns
Output Disable to High-Z Output	t_{OHZ}	0	5	ns
Output Hold from Address Change	t_{OH}	3	-	ns
Chip Selection to Power Up Time	t_{PU}	0	-	ns
Chip Selection to Power DownTime	t_{PD}	-	10	ns

* The above parameters are also guaranteed at industrial temperature range.

Downloaded from Arrow.com.

WRITE CYCLE*

Parameter	Symbol	K6R4008C1D-10		Unit
		Min	Max	
Write Cycle Time	t_{WC}	10	-	ns
Chip Select to End of Write	t_{CW}	7	-	ns
Address Set-up Time	t_{AS}	0	-	ns
Address Valid to End of Write	t_{AW}	7	-	ns
Write Pulse Width($\overline{OE}$ High)	t_{WP}	7	-	ns
Write Pulse Width($\overline{OE}$ Low)	t_{WP1}	10	-	ns
Write Recovery Time	t_{WR}	0	-	ns
Write to Output High-Z	t_{WHZ}	0	5	ns
Data to Write Time Overlap	t_{DW}	5	-	ns
Data Hold from Write Time	t_{DH}	0	-	ns
End of Write to Output Low-Z	t_{OW}	3	-	ns

* The above parameters are also guaranteed at industrial temperature range.

TIMING DIAGRAMS

TIMING WAVEFORM OF READ CYCLE(1) (Address Controlled, $\overline{CS}$=$\overline{OE}$=V_{IL}, $\overline{WE}$=V_{IH})

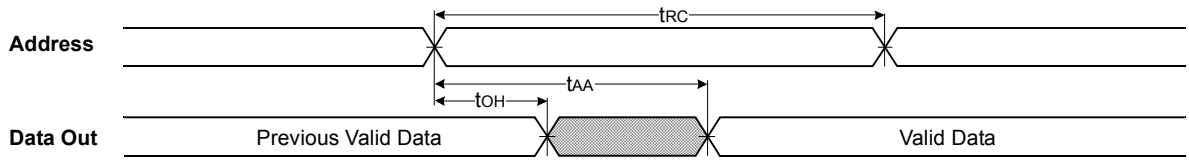

TIMING WAVEFORM OF READ CYCLE(2) ($\overline{WE}$=V_{IH})

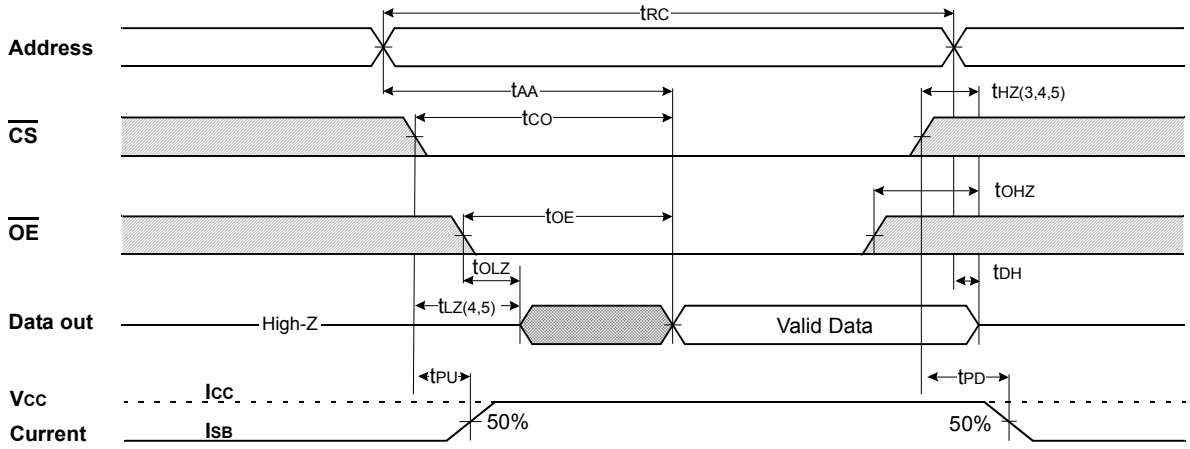

NOTES(WRITE CYCLE)

1. $\overline{WE}$ is high for read cycle.
2. All read cycle timing is referenced from the last valid address to the first transition address.
3. t_{HZ} and t_{OHZ} are defined as the time at which the outputs achieve the open circuit condition and are not referenced to V_{OH} or V_{OL} levels.
4. At any given temperature and voltage condition, t_{HZ}(Max.) is less than t_{LZ}(Min.) both for a given device and from device to device.
5. Transition is measured ±200mV from steady state voltage with Load(B). This parameter is sampled and not 100% tested.
6. Device is continuously selected with $\overline{CS}$=V_{IL}.
7. Address valid prior to coincident with $\overline{CS}$ transition low.
8. For common I/O applications, minimization or elimination of bus contention conditions is necessary during read and write cycle.

Downloaded from Arrow.com.

TIMING WAVEFORM OF WRITE CYCLE(1) ($\overline{OE}$= Clock)

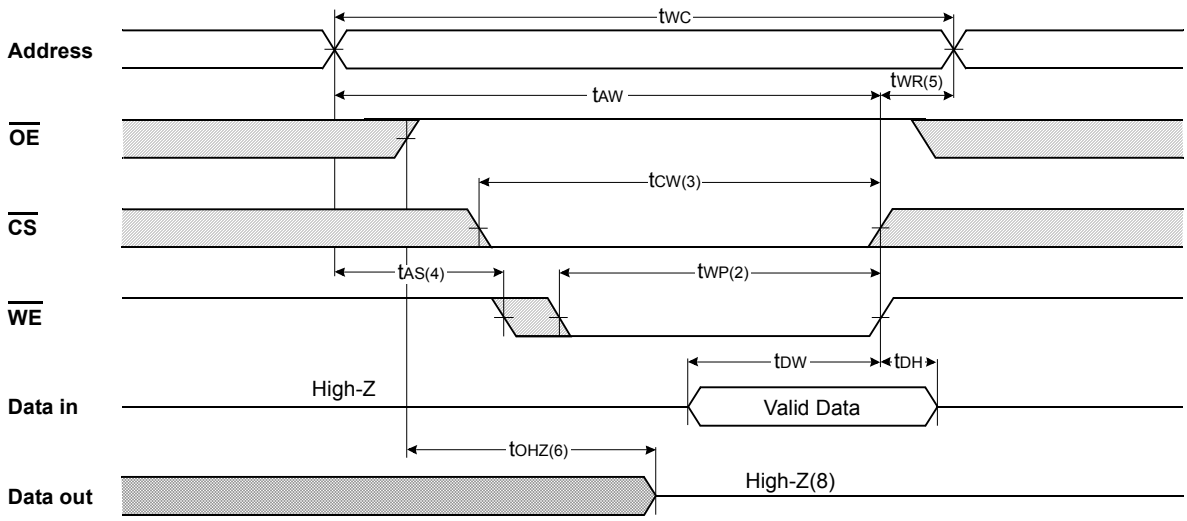

TIMING WAVEFORM OF WRITE CYCLE(2) ($\overline{OE}$=Low Fixed)

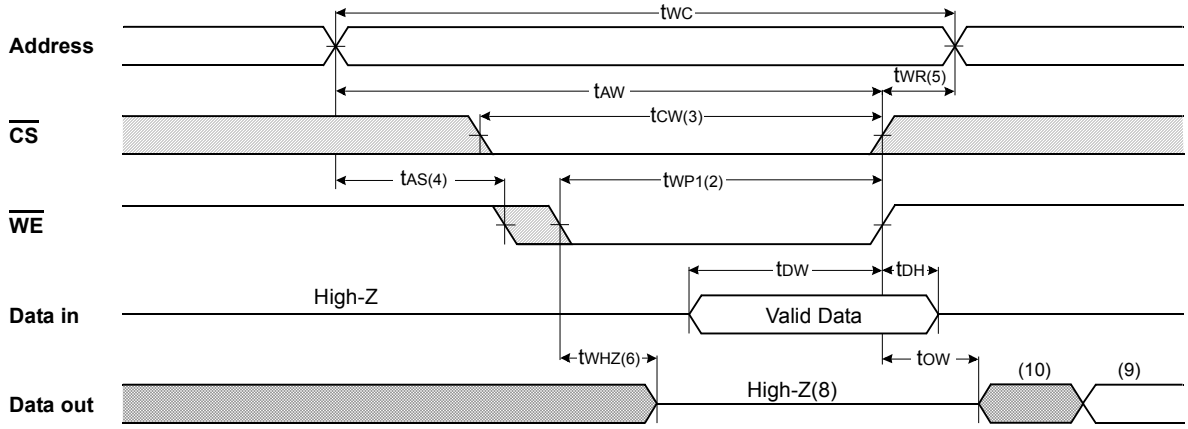

TIMING WAVEFORM OF WRITE CYCLE(3) ($\overline{CS}$ = Controlled)

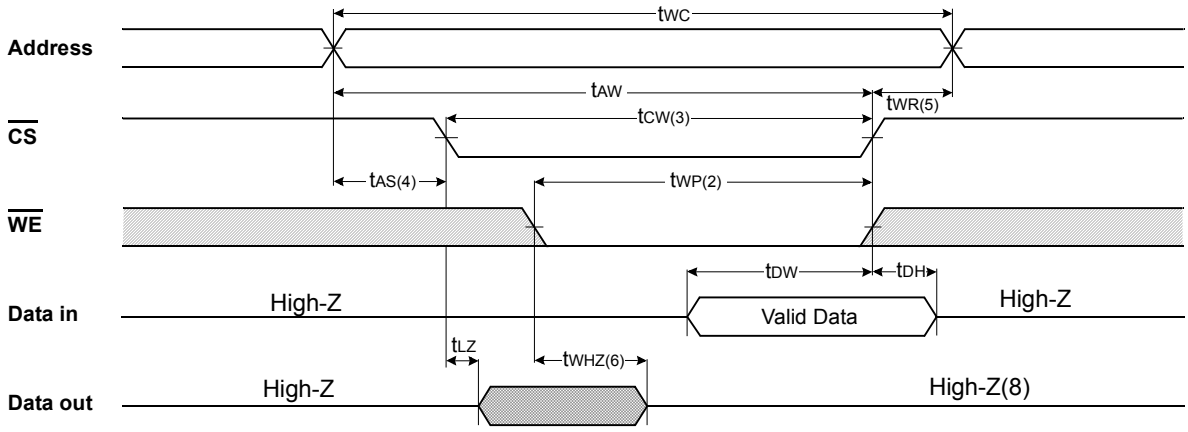

SAMSUNG ELECTRONICS
Downloaded from Arrow.com.

NOTES(WRITE CYCLE)

1. All write cycle timing is referenced from the last valid address to the first transition address.
2. A write occurs during the overlap of a low $\overline{CS}$ and $\overline{WE}$. A write begins at the latest transition $\overline{CS}$ going low and $\overline{WE}$ going low ; A write ends at the earliest transition $\overline{CS}$ going high or $\overline{WE}$ going high. t_{WP} is measured from the beginning of write to the end of write.
3. t_{CW} is measured from the later of $\overline{CS}$ going low to end of write.
4. t_{AS} is measured from the address valid to the beginning of write.
5. t_{WR} is measured from the end of write to the address change. t_{WR} applied in case a write ends as $\overline{CS}$ or $\overline{WE}$ going high.
6. If $\overline{OE}$, $\overline{CS}$ and $\overline{WE}$ are in the Read Mode during this period, the I/O pins are in the output low-Z state. Inputs of opposite phase of the output must not be applied because bus contention can occur.
7. For common I/O applications, minimization or elimination of bus contention conditions is necessary during read and write cycle.
8. If $\overline{CS}$ goes low simultaneously with $\overline{WE}$ going or after $\overline{WE}$ going low, the outputs remain high impedance state.
9. Dout is the read data of the new address.
10. When $\overline{CS}$ is low : I/O pins are in the output state. The input signals in the opposite phase leading to the output should not be applied.

FUNCTIONAL DESCRIPTION

$\overline{CS}$	$\overline{WE}$	$\overline{OE}$	Mode	I/O Pin	Supply Current
H	X	X*	Not Select	High-Z	I_{SB}, I_{SB1}
L	H	H	Output Disable	High-Z	I_{CC}
L	H	L	Read	D_{OUT}	I_{CC}
L	L	X	Write	D_{IN}	I_{CC}

* X means Don't Care.

Downloaded from Arrow.com.

PACKAGE DIMENSIONS

Units:millimeters/Inches

36-SOJ-400

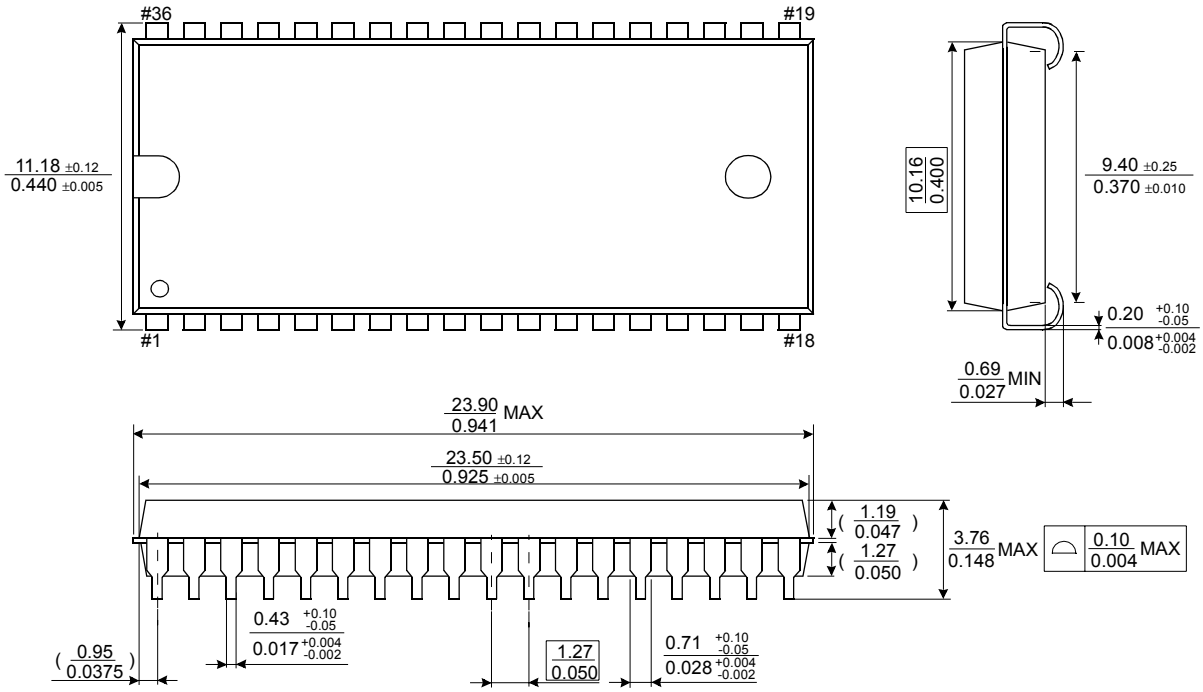

44-TSOP2-400BF

Units:millimeters/Inches

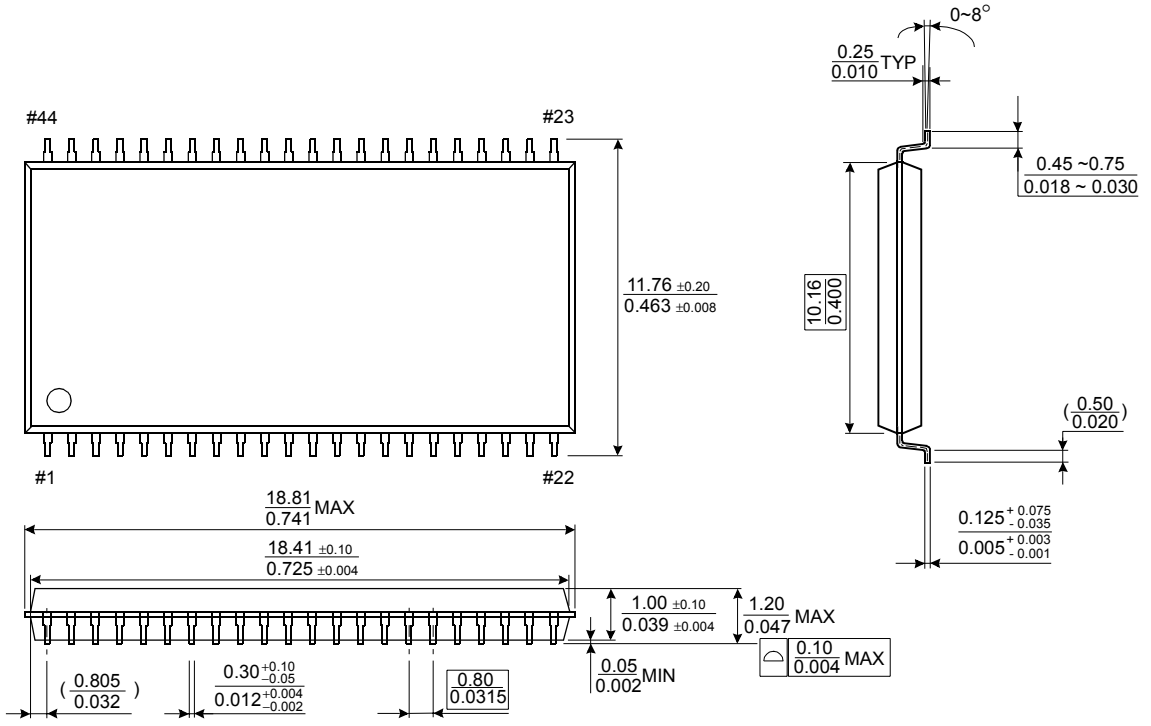

SAMSUNG ELECTRONICS

Downloaded from Arrow.com.