标 记 MARK	ECN编号/变更内容 ECN NO/DEFINITION	修 改 REVISE	日 期 DATE	核 准 APPROVE

15	9.50	7.00	8.07	8.89	8.00	40	22.00	19.50	20.57	21.39	20.50
14	9.00	6.50	7.57	8.39	7.50	34	19.00	16.50	17.57	18.39	17.50
13	8.50	6.00	7.07	7.89	7.00	32	18.00	15.50	16.57	17.39	16.50
12	8.00	5.50	6.57	7.39	6.50	30	17.00	14.50	15.57	16.39	15.50
10	7.00	4.50	5.57	6.39	5.50	28	16.00	13.50	14.57	15.39	14.50
9	6.50	4.00	5.07	5.89	5.00	26	15.00	12.50	13.57	14.39	13.50
8	6.00	3.50	4.57	5.39	4.50	24	14.00	11.50	12.57	13.39	12.50
7	5.50	3.00	4.07	4.89	4.00	22	13.00	10.50	11.57	12.39	11.50
6	5.00	2.50	3.57	4.39	3.50	20	12.00	9.50	10.57	11.39	10.50
5	4.50	2.00	3.07	3.89	3.00	18	11.00	8.50	9.57	10.39	9.50
4	4.00	1.50	2.57	3.39	2.50	16	10.00	7.50	8.57	9.39	8.50
Number of Contacts	DIM A	DIM B	DIM C	DIM D	DIM E	Number of Contacts	DIM A	DIM B	DIM C	DIM D	DIM E

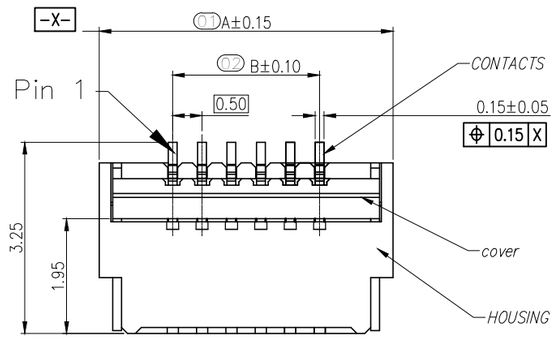

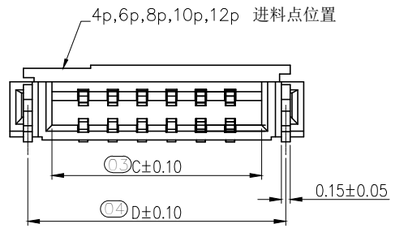

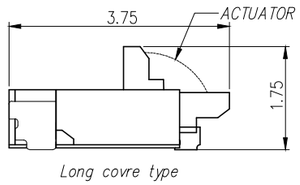

Long covre type

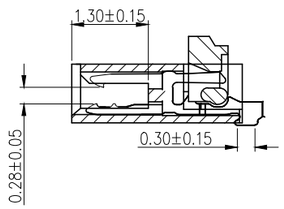

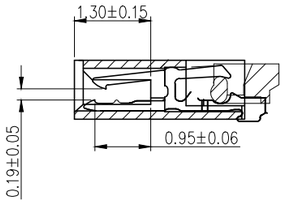

NOTE:
1. MATERIAL:
   HOUSING: LCP COLOR: NATURAL.
   CONTACTS: COPPER ALLOY.
   PEG: COPPER ALLOY.
   ACTUATOR: LCP OR PA. COLOR:BLACK
2. RATING:
   OPERATING VOLTAGE: 50Vrms AC.
   CURRENT RATING: 0.5A.
   OPERATING TEMPERATURE: -55℃~+85℃.
   OPERATING HUMIDITY RANGE: RELATIVE HUMIDITY 90% MAX.(NO CONDENSATION)
   STORAGE TEMPERATURE RANGE: -10℃~+50℃.
   STORAGE HUMIDITY RANGE: RELATIVE HUMIDITY 90% MAX.(NO CONDENSATION)

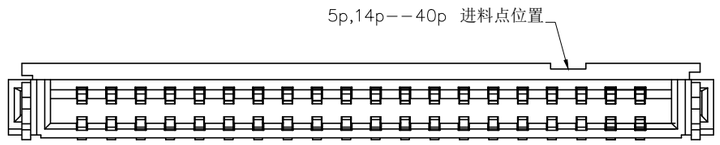

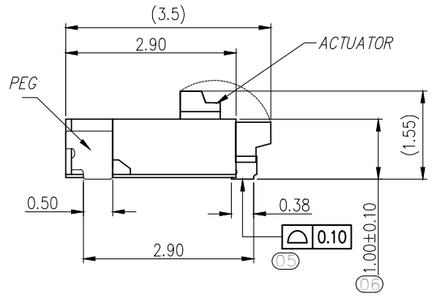

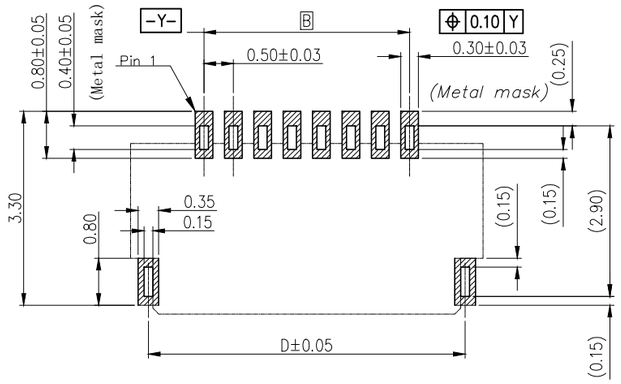

Recommended PCB mounting pattern and metal mask dimensions
Recommended metal mask thickness: t=0.1

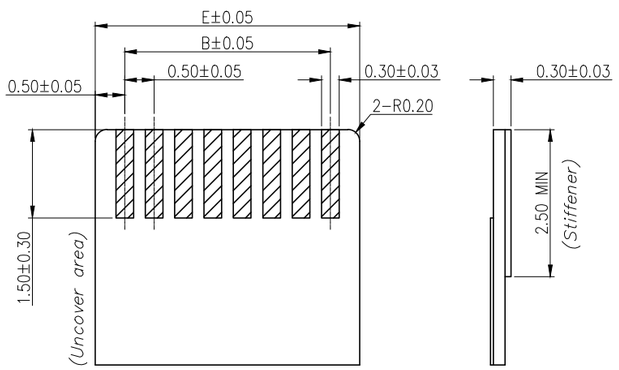

Recommended FPC/FFC Dimensions

序 号	品 名	材 质	电镀/颜色	备 注
2	端子	铜	点镀金	
1	基座	LCP	本色	

深圳市虹成电子有限公司

品 名 TITLE	FPC座
料 号 PART NO	HC-FPC-0.5-20P-FHH10

GENERAL TOLERANCES (UNLESS SPECIFIED)

X.X : ±0.30 X.X° : ±5°
X.XX : ±0.20 X.XX° : ±2°

比 列 SCALE	1:1		
单 位 UNIT	MM	制 图 DRAW	AhYe
张 数 PART NO	1 OF 1	审 核 CHECKED	夏操云
版 本 REV	A	批 准 APPROVE	赵亮亮

Unikeyic Electronics

Global Electronic Components Distributor

Click to view pricing, inventory, delivery, and lifecycle information:

HC:

HC-PM254-5.0H-2x10PZ HC-PM200-4.3H-2x20PZ HCZZ0451-4 HC-FPC-0.5-24P-FH20
HC-FPC-0.5-40P-FH20 HC-FPC-0.5-50P-FHH20 HC-PHB2.0-2x4AW HC-PM200-4.3H-2x6PS
HC-PZ254-13.8L-1x6PWA HC-USB2.0-L100-093P HC-PM200-4.3H-2x8PS HC-PZ254-11.5L-1x10PZ
HC-PZ254-11.5L-1x20PZ HC-PZ254-11.5L-2x18PZ HC-USB3.0-L175-2X1-J HCZZ0001-2
HC-FPC-0.5-6P-CSH20 HC-PHB2.0-2x5A HCZZ0451-6 HCZZ0576-5 HC-PM254-8.5H-1x21PZ
HC-PM254-8.5H-2x20PS HCZZ0514-6 HC-FPC-0.5-10P-FH20 HC-PM254-8.5H-2x30PZ HC-USB3.0-L257-J
HCZZ0032-6 HC-PZ127-7.2L-2x3PS HC-USB3.0-C26 HC-USB3.0-C34-P