BAT43WS-7-F
Schottky Rectifier Diodes

Features
Low Forward Votage Drop
Fast Switching Time
Surface Mount Package Ideally Suited for Automatic Insertion



SOD-323



Package Marking and Ordering Information

Product ID	Pack	Marking	Qty(PCS)
BAT43WS-7-F	SOD-323	S8	3000

Maximum Ratings (Ta=25°C unless otherwise noted)

Parameter	Symbol	Limit	Unit
Peak Repetitive Peak Reverse Voltage Working Peak Reverse Voltage DC Blocking Voltage	V_{RRM} V_{RWM} V_R	30	V
RMS Reverse Voltage	$V_{R(RMS)}$	21	V
Forward Continuous Current	I_{FM}	200	mA
Repetitive Peak Forward Current @t<1.0s	I_{FRM}	500	mA
Non-repetitive Peak Forward Surge Current @t=8.3ms	I_{FSM}	4.0	A
Power Dissipation	P_D	200	mW
Thermal Resistance Junction to Ambient	$R_{\theta JA}$	500	°C/W
Operating Junction Temperature Range	T_J	-40 ~ +125	°C
Storage Temperature Range	T_{STG}	-55 ~ +150	°C

Electrical Characteristics (Ta=25°C unless otherwise specified)

Parameter	Symbol	Min	Max	Unit	Conditions
Reverse breakdown voltage	$V_{(BR)}$	30		V	I_R=10μA
Forward voltage	V_F	0.26	0.33	V	I_F=2mA
	V_F		0.45	V	I_F=15mA
Reverse current	I_R		0.5	μA	V_R=25V
Capacitance between terminals	C_T		10	pF	V_R=1.0V,f=1.0MHz
Reverse recovery time	t_{rr}		5	ns	I_F=I_R=10mA Irr=0.1XI_R,R_L=100Ω

Typical Characteristics

Forward Characteristics

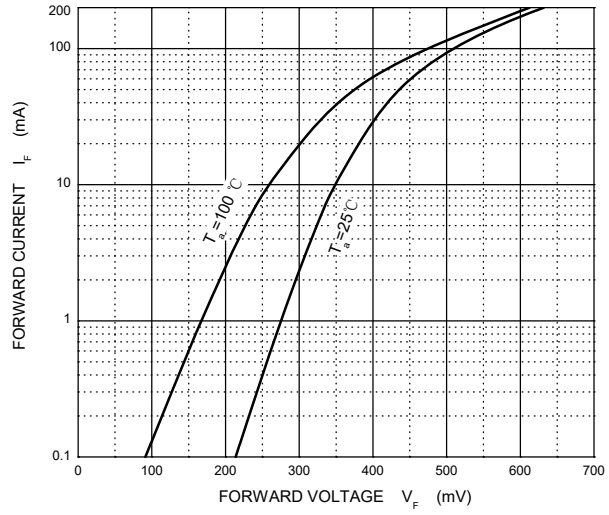

Reverse Characteristics

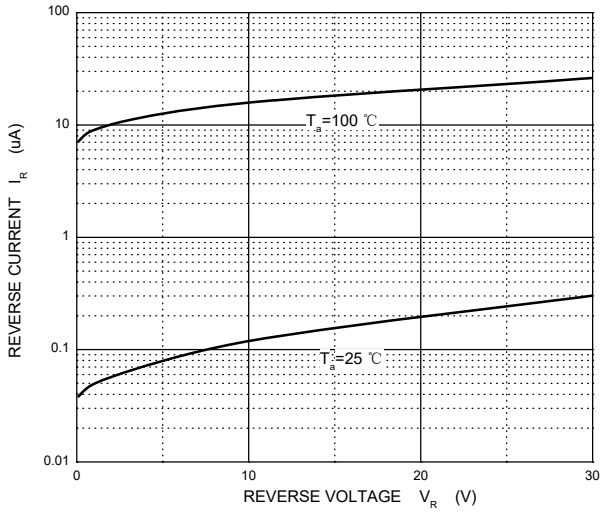

Capacitance Characteristics

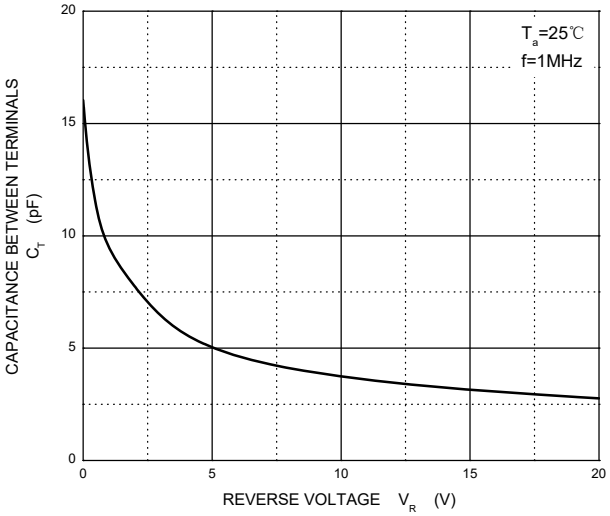

Power Derating Curve

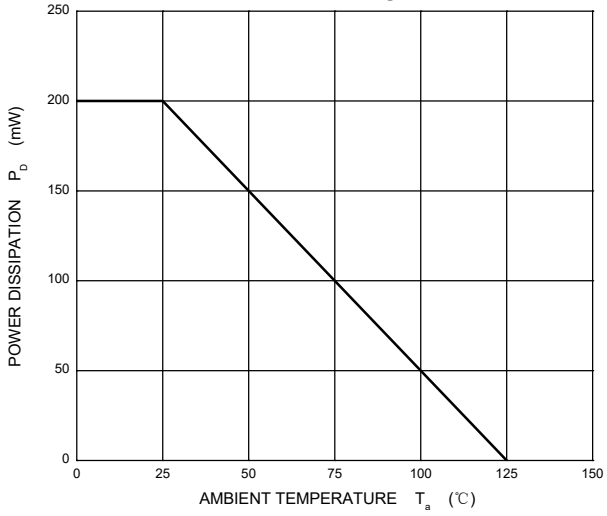

SOD-323 Package Outline Dimensions

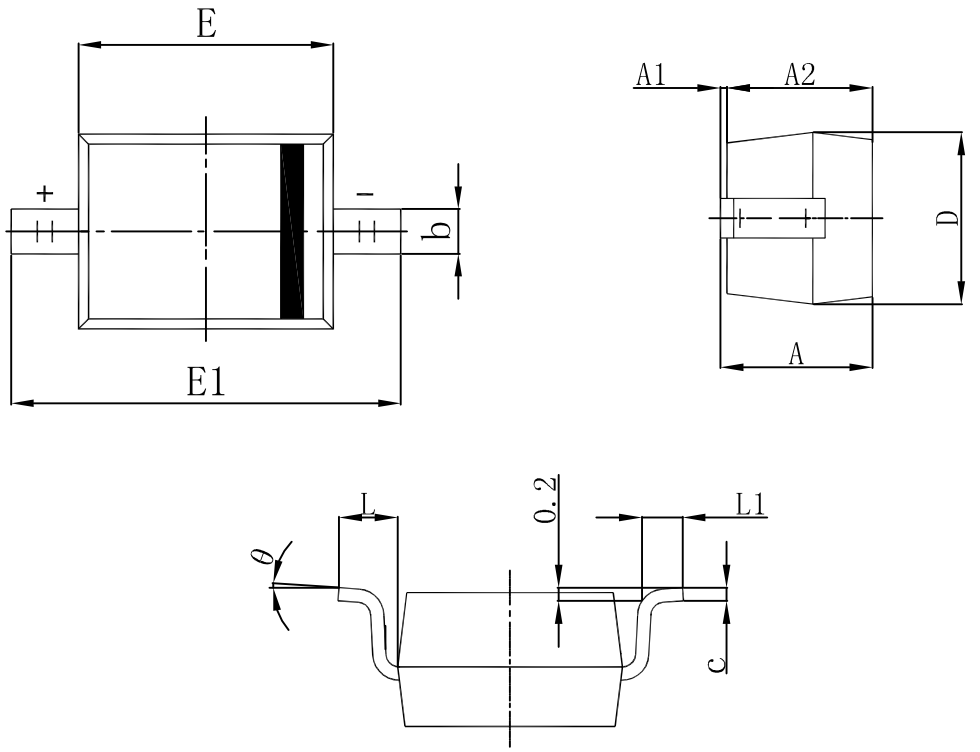

Symbol	Dimensions In Millimeters		Dimensions In Inches	
	Min	Max	Min	Max
A		1.100		0.043
A1	0.000	0.100	0.000	0.004
A2	0.800	1.000	0.031	0.039
b	0.250	0.350	0.010	0.014
c	0.080	0.150	0.003	0.006
D	1.200	1.400	0.047	0.055
E	1.600	1.800	0.063	0.071
E1	2.500	2.750	0.098	0.108
L	0.475 REF		0.019 REF	
L1	0.250	0.400	0.010	0.016
θ	0°	8°	0°	8°

Attention

■ Any and all HUA XUAN YANG ELECTRONICS products described or contained herein do not have specifications that can handle applications that require extremely high levels of reliability, such as life-support systems, aircraft's control systems, or other applications whose failure can be reasonably expected to result in serious physical and/or material damage. Consult with your HUA XUAN YANG ELECTRONICS representative nearest you before using any HUA XUAN YANG ELECTRONICS products described or contained herein in such applications.

■ HUA XUAN YANG ELECTRONICS assumes no responsibility for equipment failures that result from using products at values that exceed, even momentarily, rated values (such as maximum ratings, operating condition ranges, or other parameters) listed in products specifications of any and all HUA XUAN YANG ELECTRONICS products described or contained herein.

■ Specifications of any and all HUA XUAN YANG ELECTRONICS products described or contained herein stipulate the performance, characteristics, and functions of the described products in the independent state, and are not guarantees of the performance, characteristics, and functions of the described products as mounted in the customer's products or equipment. To verify symptoms and states that cannot be evaluated in an independent device, the customer should always evaluate and test devices mounted in the customer's products or equipment.

■ HUA XUAN YANG ELECTRONICS CO.,LTD. strives to supply high-quality high-reliability products. However, any and all semiconductor products fail with some probability. It is possible that these probabilistic failures could
give rise to accidents or events that could endanger human lives, that could give rise to smoke or fire, or that could cause damage to other property. When designing equipment, adopt safety measures so that these kinds of accidents or events cannot occur. Such measures include but are not limited to protective circuits and error prevention circuits for safe design, redundant design, and structural design.

■ In the event that any or all HUA XUAN YANG ELECTRONICS products(including technical data, services) described or contained herein are controlled under any of applicable local export control laws and regulations, such products must not be exported without obtaining the export license from the authorities concerned in accordance with the above law.

■ No part of this publication may be reproduced or transmitted in any form or by any means, electronic or mechanical, including photocopying and recording, or any information storage or retrieval system, or otherwise, without the prior written permission of HUA XUAN YANG ELECTRONICS CO.,LTD.

■ Information (including circuit diagrams and circuit parameters) herein is for example only ; it is not guaranteed for volume production. HUA XUAN YANG ELECTRONICS believes information herein is accurate and reliable, but no guarantees are made or implied regarding its use or any infringements of intellectual property rights or other rights of third parties.

■ Any and all information described or contained herein are subject to change without notice due to product/technology improvement, etc. When designing equipment, refer to the "Delivery Specification" for the HUA XUAN YANG ELECTRONICS product that you intend to use.

Unikeyic Electronics

Global Electronic Components Distributor

Click to view pricing, inventory, delivery, and lifecycle information:

HXY MOSFET:

RLSD32A121V PESDLC2FD3V3BH TPSMB28A-VR HCEZ36V,L3F HSD15C.TCT TPSMB100CA-VR AQ15C-01FTG PJEC5V0M1FN2 AZ4836-01L HACPDQC5V0-HF HAZ4007-01H PESDNC2XD5VBF ESD5L5.0C-HXY ESD5LM5.0C-HXY HESDSLC3V3D3B HLY323BC1524L HPTVSUC3D5VB LM393DR-HXY PESDNC2XD5VBL 60N06 BV05C-H HSEN2411D3 PJSD24CW_R1 AZ4007-01H HSEN3611D3 HSTS521050B331 HESD36VD3B HRCLAMP3371ZCTFT HSG3D15B3.3MA PESDSC2FD5VU