PART NO.	ENGINEERING NO.	FINISHED LENGTH
1201080574	E16A06017M005	0.5M [19.7"]
1201080575	E16A06017M010	1.0M 3'3"]
1201080661	E16A06017M100	10.0M [32'10"]

CABLE LENGTH TOLERANCES
>.3M [1FT]: +19mm-0 [+.75in-0]
.3 - .9M [1 - 3FT]: +44.5mm-0 [+1.75in-0]
.9 - 1.8M [3 - 6FT]: +55.6mm-0 [+2.19in-0]
1.8 - 3.7M [6 - 12FT: +88.9mm-0 [+3.50in-0]
3.7 - 7.3M [12 - 24FT]: +165.1mm-0 [+6.50in-0]
7.3-14.6M [24 - 48FT]: +317.5mm-0 [+12.50in-0]
14.6 - 30.5M [48-100FT]: +622.3mm-0 [+24.50in-0]
OVER 30M [100FT] +2% OF FINISHED LENGTH

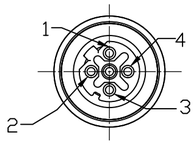

FACE VIEW – MALE M12

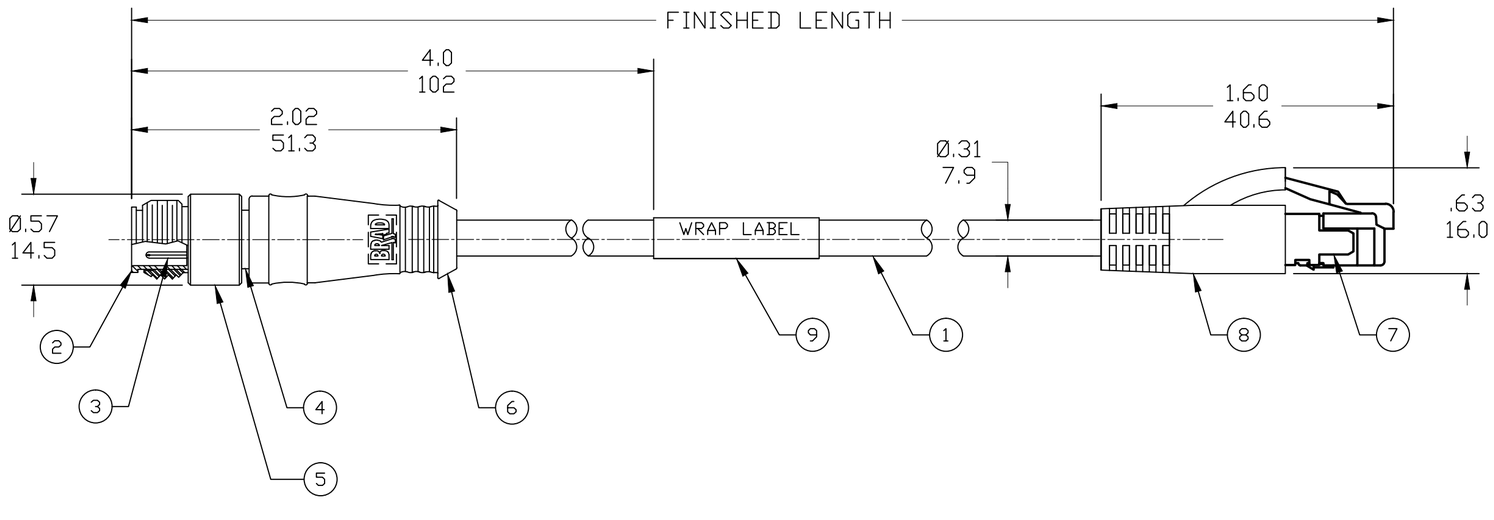

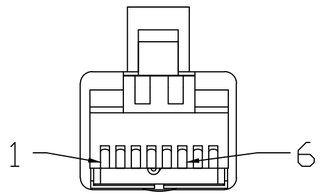

FACE VIEW – MALE RJ45
SCALE: 2X

NOTES:
1. MATERIAL: AS NOTED
2. FINISH: AS NOTED
3. ELECTRICAL:
   VOLTAGE: 125V
   CURRENT: 1.5A
4. TEMP RATING: -20° TO +75°C
5. PROTECTION: IP67 (WHEN MATED)
6. COUPLING THREAD: M12 X 1
7. UL CERTIFIED FILE: E200650
8. ALL DIMS ARE FOR REFERENCE
   UNLESS NOTED OTHERWISE

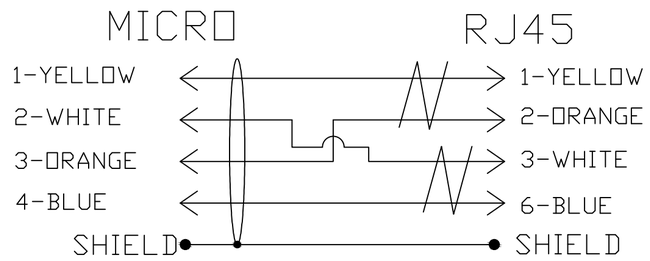

WIRING DIAGRAM

PART NUMBER LEGEND

E16A06017M005

FINISHED LENGTH:
M005= 0.5 METER
M010= 1 METER
M100= 10 METER

ITEM	DESCRIPTION	MATERIAL	FINISH
9	WRAP LABEL	VINYL	BLACK/YELLOW
8	RJ-45 BOOT	PVC	BLACK
7	RJ-45 PLUG	POLYCARBONATE	CLEAR
6	OVERMOLD	PBT	GRAY
5	COUPLING NUT	BRASS	NICKEL PLATED
4	SHIELD HOUSING	BRASS	NICKEL PLATED
3	CONTACT PIN	COPPER ALLOY	GOLD PLATED
2	MALE INSERT, D-CODE	PUR	BLACK
1	CABLE, 2 PAIR, 22AWG, SHLD	TPE JACKET	GREEN

REF. THIS DRAWING SUPERSEDES CO-CREATE DRAWING SD-120108-091 REV-B

REV: C
DESCRIPTION: REVISED PER LATEST STD
EC NO: IPG2019-0171 2018/10/15
DRWN: RSTONE 2018/10/22
CH'KD: C CHRAST ---
APPR: BWOODMAN

QUALITY SYMBOL
▼=0
C=0

GENERAL TOLERANCES (UNLESS SPECIFIED)

	mm	INCH
4 PLACES	±---	±---
3 PLACES	±---	±---
2 PLACES	±---	±---
1 PLACE	±---	±---
ANGULAR ±---°		

DRAFT WHERE APPLICABLE MUST REMAIN WITHIN DIMENSIONS

DIMENSION STYLE: IN/MM
SCALE: NTS
DESIGN UNITS: INCH
THIRD ANGLE PROJECTION

DRAWN BY: RSTONE DATE: 2018/10/15
CHECKED BY: C CHRAST DATE: ----
APPROVED BY: ---- DATE: ----

TITLE: M12 TO RJ45 CORDSET 4P MALE M12/RJ45 ST PROFI-NET

molex MOLEX INCORPORATED

MATERIAL NO.: SEE P/N CHART
DOCUMENT NO.: SD-120108-092
SHEET NO.: 1 0F 1

SIZE: C

THIS DRAWING CONTAINS INFORMATION THAT IS PROPRIETARY TO MOLEX INCORPORATED AND SHOULD NOT BE USED WITHOUT WRITTEN PERMISSION

Unikeyic Electronics

Global Electronic Components Distributor

Click to view pricing, inventory, delivery, and lifecycle information:

molex:

347910140 459850483 5023860371 0351510214 357470310 528061110 528520870 197054301
348242245 351820290 0464363133 0477256010 34708-2028 348268126 355240920 502584-0870
528523070 464373005 0194360214 194270031 194290026 197134001 347928042 502584-1060
503988100 194290039 347072012 349672001 502380-0800 502585-0370