DS34LV87T Enhanced CMOS Quad Differential Line Driver

Check for Samples: DS34LV87T

FEATURES

- **Meets TIA/EIA-422-B (RS-422) and ITU-T V.11 Recommendation**
- **Interoperable With Existing 5V RS-422 Networks**
- **Ensured V_{OD} of 2V Min Over Operating Conditions**
- **Balanced Output Crossover for Low EMI (Typical Within 40 mV of 50% Voltage Level)**
- **Low Power Design (330 µW @ 3.3V Static)**
- **ESD ≥ 7 kV on Cable I/O Pins (HBM)**
- **Industrial Temperature Range**
- **Ensured AC Parameter:**
  - **Maximum Driver Skew: 2 ns**
  - **Maximum Transition Time: 10 ns**
- **Pin Compatible With DS26C31**
- **Available in SOIC Packaging**

Connection Diagram

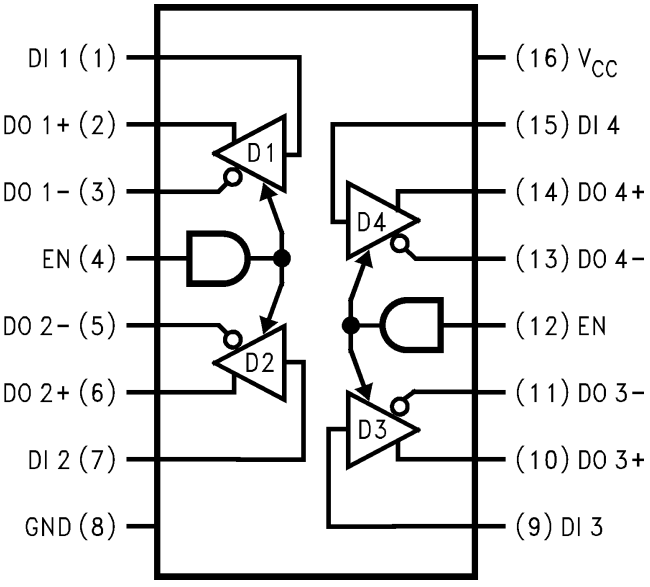

Figure 1. Dual-In-Line Package (Top View)
See Package Number D0016A

DESCRIPTION

The DS34LV87T is a high speed quad differential CMOS driver that meets the requirements of both TIA/EIA-422-B and ITU-T V.11. The CMOS DS34LV87T features low static I_{CC} of 100 µA max which makes it ideal for battery powered and power conscious applications. The TRI-STATE enable, EN, allows the device to be disabled when the device is not in use to minimize power. The dual enable scheme allows for flexibility in turning devices on or off.

Protection diodes protect all the driver inputs against electrostatic discharge. The driver and enable inputs (DI and EN) are compatible with LVTTL and LVCMOS devices. Differential outputs have the same V_{OD} (≥2V) ensure as the 5V version. The outputs have enhanced ESD Protection providing greater than 7 kV tolerance.

TRUTH TABLE(1)

Enables	Input	Outputs	
EN	DI	DO+	DO−
L	X	Z	Z
H	H	H	L
H	L	L	H

(1) L = Low logic state
X = Irrelevant
H = High logic state
Z = TRI-STATE

Please be aware that an important notice concerning availability, standard warranty, and use in critical applications of Texas Instruments semiconductor products and disclaimers thereto appears at the end of this data sheet.

PRODUCTION DATA information is current as of publication date. Products conform to specifications per the terms of the Texas Instruments standard warranty. Production processing does not necessarily include testing of all parameters.

Copyright © 2006–2013, Texas Instruments Incorporated

These devices have limited built-in ESD protection. The leads should be shorted together or the device placed in conductive foam during storage or handling to prevent electrostatic damage to the MOS gates.

ABSOLUTE MAXIMUM RATINGS(1)(2)

Supply Voltage (V_{CC})		−0.5V to +7V
Enable Input Voltage (EN)		−0.5V to V_{CC} + 0.5V
Driver Input Voltage (D_I)		−0.5V to V_{CC} + 0.5V
Clamp Diode Current		±20 mA
DC Output Current, per pin		±150 mA
Driver Output Voltage	(Power Off: DO+, DO−)	−0.5V to +7V
Maximum Package Power Dissipation @+25°C	D Package	1226 mW
Derate D Package		9.8 mW/°C above +25°C
Storage Temperature Range		−65°C to +150°C
Lead Temperature Range (Soldering, 4 sec.)		+260°C
ESD Ratings (HBM, 1.5k, 100 pF)	Driver Outputs	≥ 7 kV
	Other Pins	≥ 2.5 kV

(1) If Military/Aerospace specified devices are required, please contact the Texas Instruments Sales Office/ Distributors for availability and specifications.
(2) Absolute Maximum Ratings are those values beyond which the safety of the device cannot be ensured. They are not meant to imply that the device should be operated at these limits. The table of Electrical Characteristics specifies conditions of device operation.

RECOMMENDED OPERATING CONDITIONS

		Min	Typ	Max	Units
Supply Voltage (V_{CC})		3.0	3.3	3.6	V
Operating Free Air	Temperature Range (T_A) DS34LV87T	−40	25	+85	°C
Input Rise and Fall Time				500	ns

Copyright © 2006–2013, Texas Instruments Incorporated

ELECTRICAL CHARACTERISTICS(1)(2)

Over Supply Voltage and Operating Temperature ranges, unless otherwise specified

Symbol	Parameter	Conditions	Pin	Min	Typ	Max	Units
V_{OD1}	Output Differential Voltage	R_L= ∞, (No Load)	DO+, DO−		3.3	4.0	V
V_{OD2}	Output Differential Voltage	R_L = 100Ω See Figure 2		2	2.6		V
ΔV_{OD2}	Change in Magnitude of Output Differential Voltage			−400	7	400	mV
V_{OD3}	Output Differential Voltage	R_L = 3900Ω (V.11), See Figure 2(3)			3.2	3.5	V
V_{OC}	Common Mode Voltage	R_L = 100Ω See Figure 2			1.5	2	V
ΔV_{OC}	Change in Magnitude of Common Mode Voltage			−400	6	400	mV
I_{OZ}	TRI-STATE Leakage Current	V_{OUT} = V_{CC} or GND Drivers Disabled			±0.5	±20	µA
I_{SC}	Output Short Circuit Current	V_{OUT} = 0V V_{IN} = V_{CC} or GND(4)		−40	−70	−150	mA
I_{OFF}	Output Leakage Current	V_{CC}= 0V, V_{OUT} = 3V			0.03	100	µA
		V_{CC} = 0V, V_{OUT} = −0.25V			−0.08	−100	µA
V_{IH}	High Level Input Voltage		DI, EN	2.0		V_{CC}	V
V_{IL}	Low Level Input Voltage			GND		0.8	V
I_{IH}	High Level Input Current	V_{IN}= V_{CC}				10	µA
I_{IL}	Low Level Input Current	V_{IN} = GND		−10			µA
V_{CL}	Input Clamp Voltage	I_{IN} = −18 mA				−1.5	V
I_{CC}	Power Supply Current	No Load, V_{IN} (all) = V_{CC} or GND	V_{CC}			100	µA

(1) Current into device pins is defined as positive. Current out of device pins is defined as negative. All voltages are referenced to ground except differential voltages V_{OD1}, V_{OD2}, V_{OD3}.
(2) All typical values are given for V_{CC}= 3.3V and T_A = +25°C.
(3) This specification limit is for compliance with TIA/EIA-422-B and ITU-T V.11.
(4) Only one output shorted at a time. The output (true or complement) is configured High.

Copyright © 2006–2013, Texas Instruments Incorporated

SWITCHING CHARACTERISTICS(1)(2)

Over Supply Voltage and Operating Temperature ranges, unless otherwise specified

Symbol	Parameter	Conditions	Min	Typ	Max	Units
t_{PHLD}	Differential Propagation Delay High to Low	R_L = 100Ω, C_L = 50 pF See Figure 3 and Figure 4	6	10.5	16	ns
t_{PLHD}	Differential Propagation Delay Low to High		6	11	16	ns
t_{SKD}	Differential Skew $\|t_{PHLD}-t_{PLHD}\|$			0.5	2.0	ns
t_{SK1}	Skew, Pin to Pin (same device)			1.0	2.0	ns
t_{SK2}	Skew, Part to Part(3)			3.0	5.0	ns
t_{TLH}	Differential Transition Time Low to High (20% to 80%)			4.2	10	ns
t_{THL}	Differential Transition Time High to Low (80% to 20%)			4.7	10	ns
t_{PHZ}	Disable Time High to Z	See Figure 5 and Figure 6		12	20	ns
t_{PLZ}	Disable Time Low to Z			9	20	ns
t_{PZH}	Enable Time Z to High			22	32	ns
t_{PZL}	Enable Time Z to Low			22	32	ns
f_{MAX}	Maximum Operating Frequency(4)			32		MHz

(1) f = 1 MHz, t_r and t_f ≤ 6 ns (10% to 90%).
(2) See TIA/EIA-422-B specifications for exact test conditions.
(3) Devices are at the same V_{CC} and within 5°C within the operating temperature range.
(4) All channels switching, output duty cycle criteria is 40%/60% measured at 50%. This parameter is ensured by design and characterization.

Copyright © 2006–2013, Texas Instruments Incorporated

PARAMETER MEASUREMENT INFORMATION

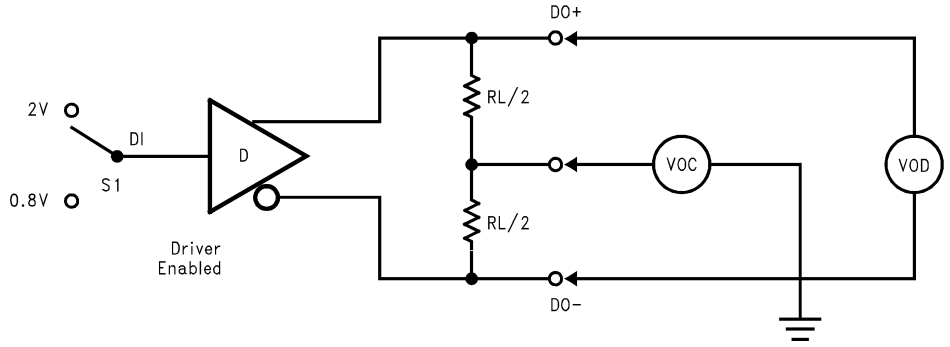

Figure 2. Differential Driver DC Test Circuit

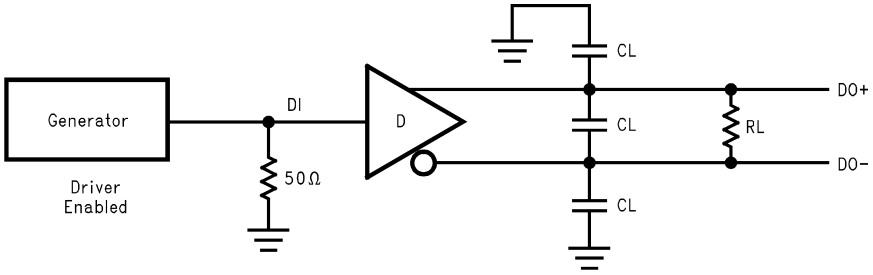

Figure 3. Differential Driver Propagation Delay and Transition Time Test Circuit

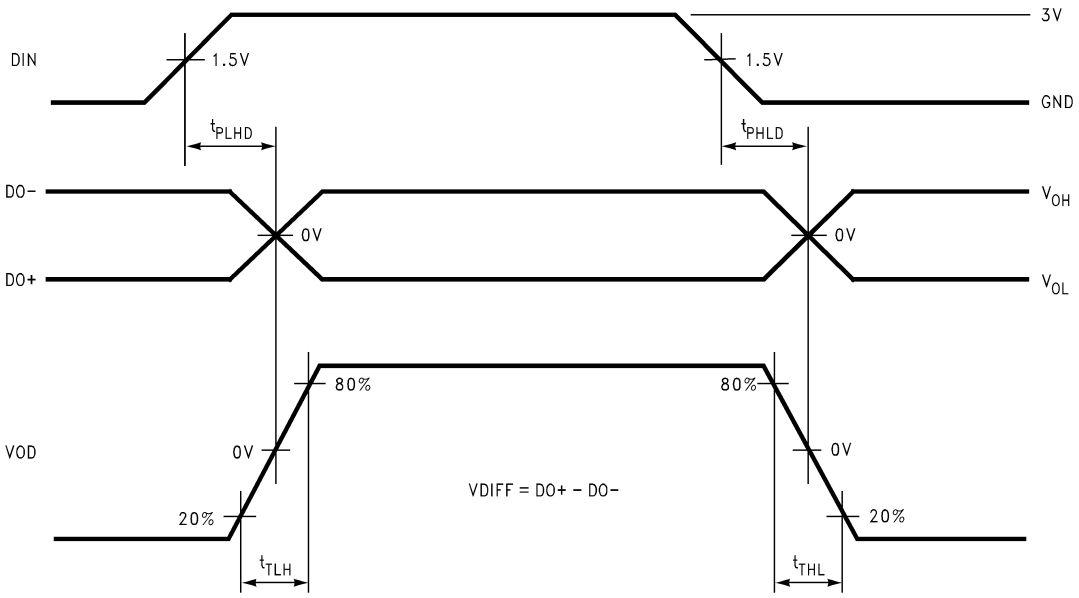

Generator waveform for all tests unless otherwise specified: f = 1 MHz, Duty Cycle = 50%, Z_o = 50Ω, t_r ≤ 10 ns, t_f ≤ 10 ns.

C_L includes probe and fixture capacitance.

Figure 4. Differential Driver Propagation Delay and Transition Time Waveforms

PARAMETER MEASUREMENT INFORMATION (continued)

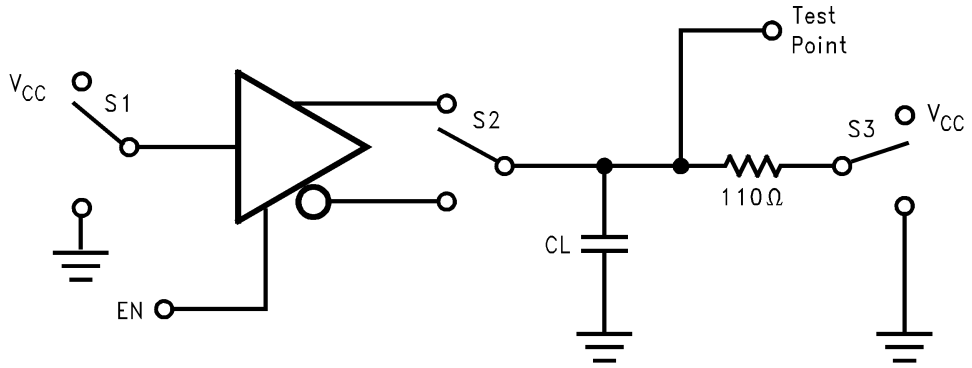

Figure 5. Driver Single-Ended Tri-state Test Circuit

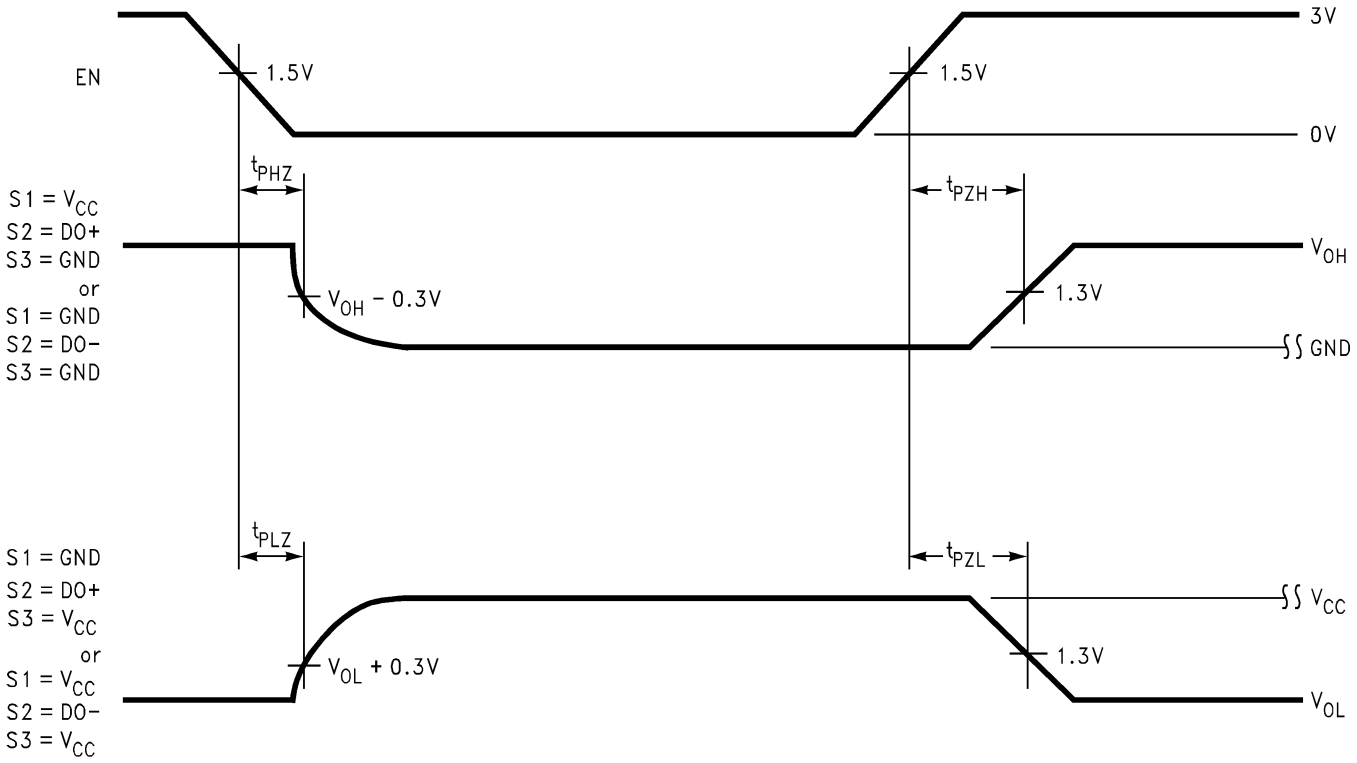

Figure 6. Driver Single-Ended Tri-state Waveforms

Copyright © 2006–2013, Texas Instruments Incorporated

TYPICAL APPLICATION INFORMATION

General application guidelines and hints for differential drivers and receivers may be found in the following application notes:

- Transmission Line Drivers and Receivers for TIA/EIA Standards RS-422 and RS-423(SNLA137)
- A Comparison of Differential Termination Techniques(SNLA304)

Power Decoupling Recommendations:

Bypass caps must be used on power pins. High frequency ceramic (surface mount is recommended) 0.1 µF in parallel with 0.01 µF at the power supply pin. A 10 µF or greater tantalum or electrolytic should be connected at the power entry point on the printed circuit board.

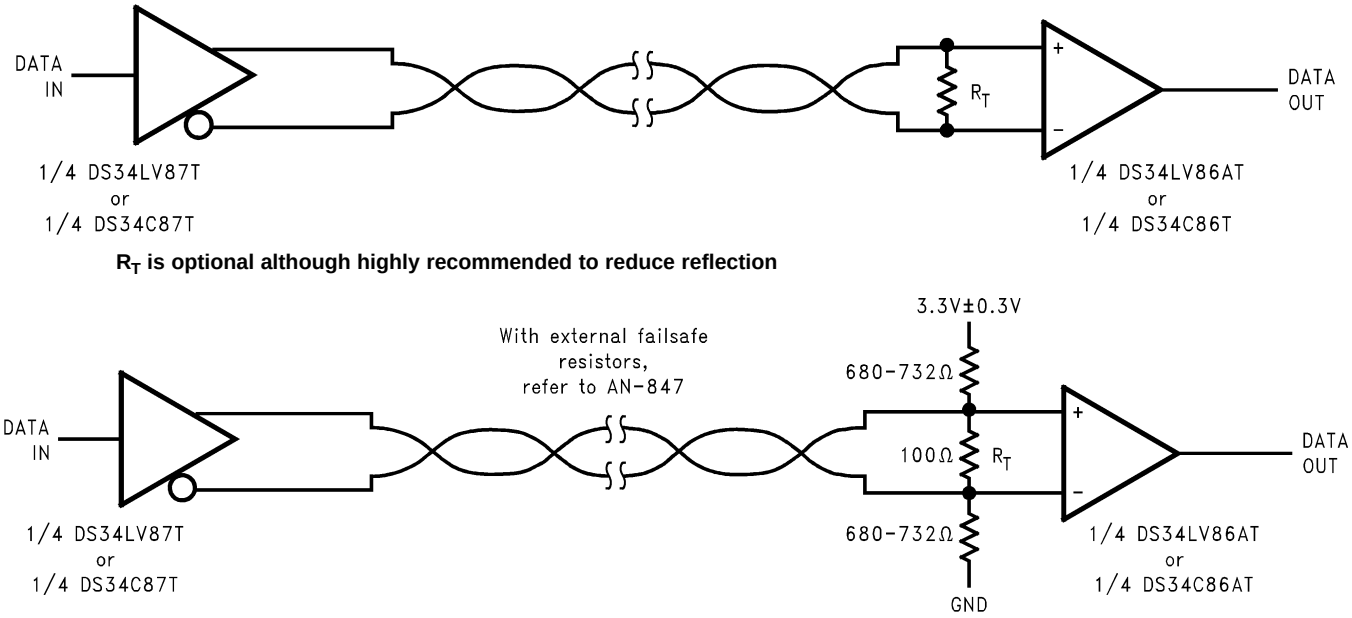

Figure 7. Typical Driver Connection

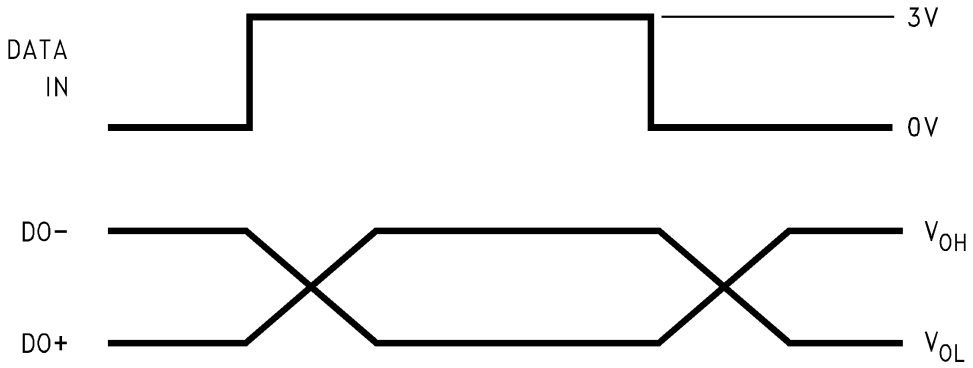

Figure 8. Typical Driver Output Waveforms

REVISION HISTORY

Changes from Revision C (April 2013) to Revision D	Page
• Changed layout of National Data Sheet to TI format	7

Copyright © 2006–2013, Texas Instruments Incorporated

PACKAGING INFORMATION

Orderable Device	Status (1)	Package Type	Package Drawing	Pins	Package Qty	Eco Plan (2)	Lead/Ball Finish (6)	MSL Peak Temp (3)	Op Temp (°C)	Device Marking (4/5)	Samples
DS34LV87TM	LIFEBUY	SOIC	D	16	48	TBD	Call TI	Call TI	-40 to 85	DS34LV87 TM	
DS34LV87TM/NOPB	ACTIVE	SOIC	D	16	48	Green (RoHS & no Sb/Br)	CU SN	Level-1-260C-UNLIM	-40 to 85	DS34LV87 TM	Samples
DS34LV87TMX	LIFEBUY	SOIC	D	16	2500	TBD	Call TI	Call TI	-40 to 85	DS34LV87 TM	
DS34LV87TMX/NOPB	ACTIVE	SOIC	D	16	2500	Green (RoHS & no Sb/Br)	CU SN	Level-1-260C-UNLIM	-40 to 85	DS34LV87 TM	Samples

(1) The marketing status values are defined as follows:
ACTIVE: Product device recommended for new designs.
LIFEBUY: TI has announced that the device will be discontinued, and a lifetime-buy period is in effect.
NRND: Not recommended for new designs. Device is in production to support existing customers, but TI does not recommend using this part in a new design.
PREVIEW: Device has been announced but is not in production. Samples may or may not be available.
OBSOLETE: TI has discontinued the production of the device.

(2) **RoHS:** TI defines "RoHS" to mean semiconductor products that are compliant with the current EU RoHS requirements for all 10 RoHS substances, including the requirement that RoHS substance do not exceed 0.1% by weight in homogeneous materials. Where designed to be soldered at high temperatures, "RoHS" products are suitable for use in specified lead-free processes. TI may reference these types of products as "Pb-Free".
RoHS Exempt: TI defines "RoHS Exempt" to mean products that contain lead but are compliant with EU RoHS pursuant to a specific EU RoHS exemption.
Green: TI defines "Green" to mean the content of Chlorine (Cl) and Bromine (Br) based flame retardants meet JS709B low halogen requirements of <=1000ppm threshold. Antimony trioxide based flame retardants must also meet the <=1000ppm threshold requirement.

(3) MSL, Peak Temp. - The Moisture Sensitivity Level rating according to the JEDEC industry standard classifications, and peak solder temperature.

(4) There may be additional marking, which relates to the logo, the lot trace code information, or the environmental category on the device.

(5) Multiple Device Markings will be inside parentheses. Only one Device Marking contained in parentheses and separated by a "~" will appear on a device. If a line is indented then it is a continuation of the previous line and the two combined represent the entire Device Marking for that device.

(6) Lead/Ball Finish - Orderable Devices may have multiple material finish options. Finish options are separated by a vertical ruled line. Lead/Ball Finish values may wrap to two lines if the finish value exceeds the maximum column width.

Important Information and Disclaimer: The information provided on this page represents TI's knowledge and belief as of the date that it is provided. TI bases its knowledge and belief on information provided by third parties, and makes no representation or warranty as to the accuracy of such information. Efforts are underway to better integrate information from third parties. TI has taken and

continues to take reasonable steps to provide representative and accurate information but may not have conducted destructive testing or chemical analysis on incoming materials and chemicals.
TI and TI suppliers consider certain information to be proprietary, and thus CAS numbers and other limited information may not be available for release.

In no event shall TI's liability arising out of such information exceed the total purchase price of the TI part(s) at issue in this document sold by TI to Customer on an annual basis.

TAPE AND REEL INFORMATION

REEL DIMENSIONS

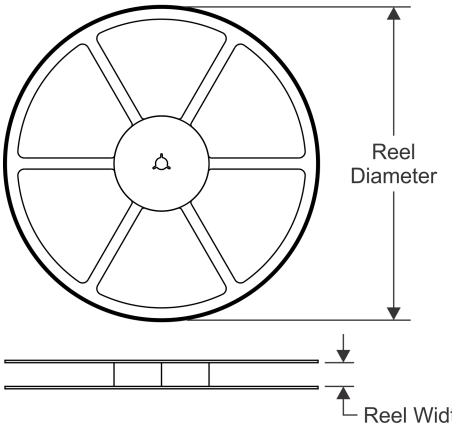

TAPE DIMENSIONS

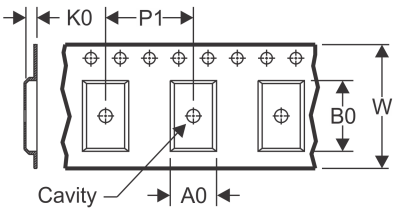

A0	Dimension designed to accommodate the component width
B0	Dimension designed to accommodate the component length
K0	Dimension designed to accommodate the component thickness
W	Overall width of the carrier tape
P1	Pitch between successive cavity centers

QUADRANT ASSIGNMENTS FOR PIN 1 ORIENTATION IN TAPE

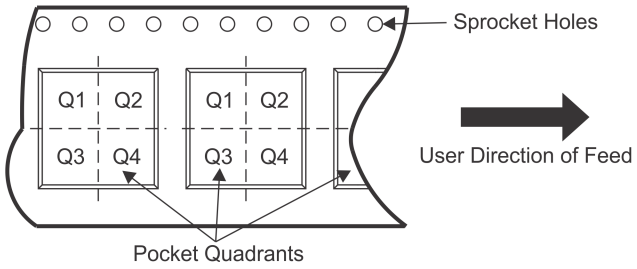

*All dimensions are nominal

Device	Package Type	Package Drawing	Pins	SPQ	Reel Diameter (mm)	Reel Width W1 (mm)	A0 (mm)	B0 (mm)	K0 (mm)	P1 (mm)	W (mm)	Pin1 Quadrant
DS34LV87TMX/NOPB	SOIC	D	16	2500	330.0	16.4	6.5	10.3	2.3	8.0	16.0	Q1

TAPE AND REEL BOX DIMENSIONS

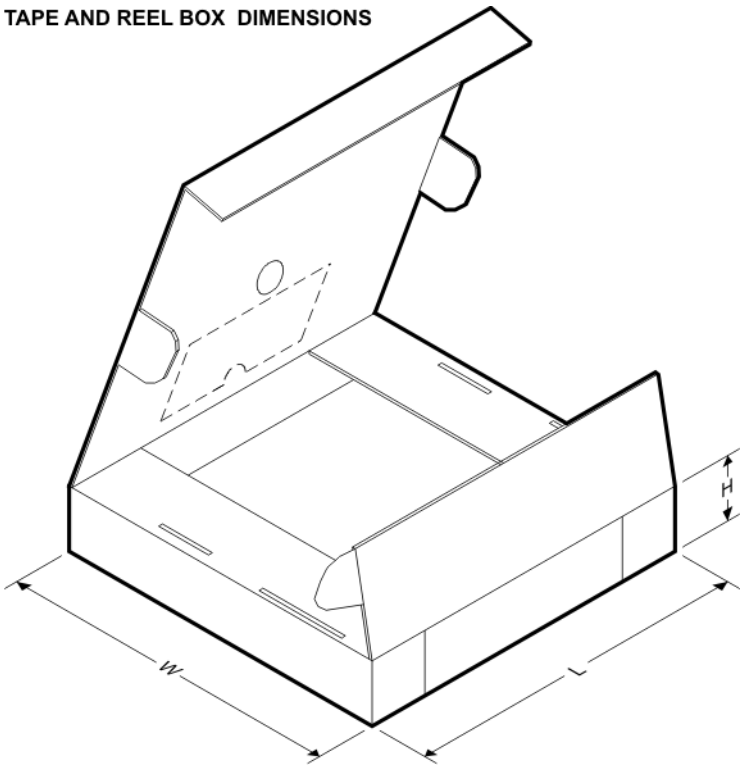

*All dimensions are nominal

Device	Package Type	Package Drawing	Pins	SPQ	Length (mm)	Width (mm)	Height (mm)
DS34LV87TMX/NOPB	SOIC	D	16	2500	367.0	367.0	35.0

D (R–PDSO–G16) PLASTIC SMALL OUTLINE

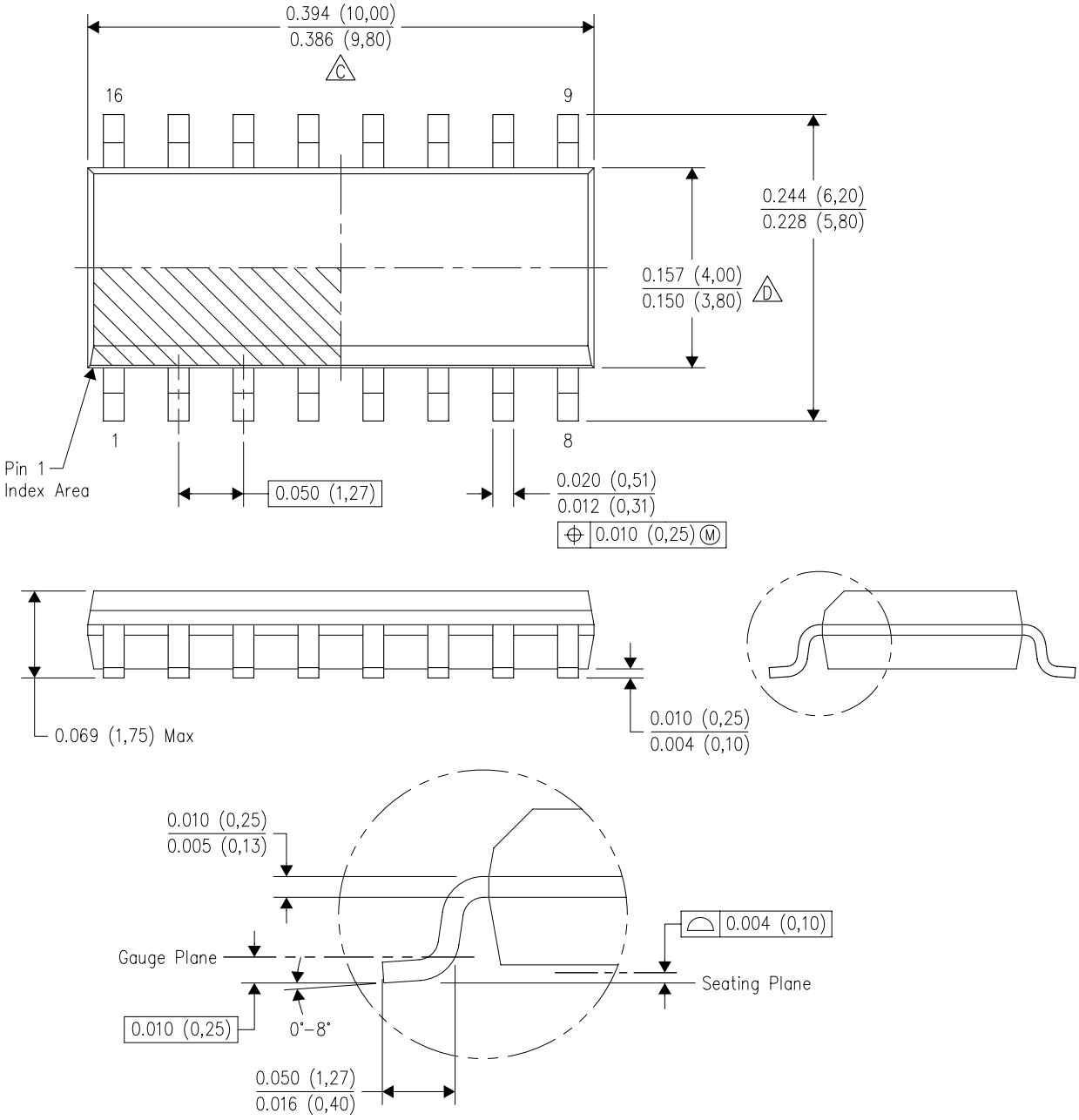

NOTES:
A. All linear dimensions are in inches (millimeters).
B. This drawing is subject to change without notice.
C. Body length does not include mold flash, protrusions, or gate burrs. Mold flash, protrusions, or gate burrs shall not exceed 0.006 (0,15) each side.
D. Body width does not include interlead flash. Interlead flash shall not exceed 0.017 (0,43) each side.
E. Reference JEDEC MS–012 variation AC.

IMPORTANT NOTICE

Texas Instruments Incorporated (TI) reserves the right to make corrections, enhancements, improvements and other changes to its semiconductor products and services per JESD46, latest issue, and to discontinue any product or service per JESD48, latest issue. Buyers should obtain the latest relevant information before placing orders and should verify that such information is current and complete.

TI's published terms of sale for semiconductor products (http://www.ti.com/sc/docs/stdterms.htm) apply to the sale of packaged integrated circuit products that TI has qualified and released to market. Additional terms may apply to the use or sale of other types of TI products and services.

Reproduction of significant portions of TI information in TI data sheets is permissible only if reproduction is without alteration and is accompanied by all associated warranties, conditions, limitations, and notices. TI is not responsible or liable for such reproduced documentation. Information of third parties may be subject to additional restrictions. Resale of TI products or services with statements different from or beyond the parameters stated by TI for that product or service voids all express and any implied warranties for the associated TI product or service and is an unfair and deceptive business practice. TI is not responsible or liable for any such statements.

Buyers and others who are developing systems that incorporate TI products (collectively, "Designers") understand and agree that Designers remain responsible for using their independent analysis, evaluation and judgment in designing their applications and that Designers have full and exclusive responsibility to assure the safety of Designers' applications and compliance of their applications (and of all TI products used in or for Designers' applications) with all applicable regulations, laws and other applicable requirements. Designer represents that, with respect to their applications, Designer has all the necessary expertise to create and implement safeguards that (1) anticipate dangerous consequences of failures, (2) monitor failures and their consequences, and (3) lessen the likelihood of failures that might cause harm and take appropriate actions. Designer agrees that prior to using or distributing any applications that include TI products, Designer will thoroughly test such applications and the functionality of such TI products as used in such applications.

TI's provision of technical, application or other design advice, quality characterization, reliability data or other services or information, including, but not limited to, reference designs and materials relating to evaluation modules, (collectively, "TI Resources") are intended to assist designers who are developing applications that incorporate TI products; by downloading, accessing or using TI Resources in any way, Designer (individually or, if Designer is acting on behalf of a company, Designer's company) agrees to use any particular TI Resource solely for this purpose and subject to the terms of this Notice.

TI's provision of TI Resources does not expand or otherwise alter TI's applicable published warranties or warranty disclaimers for TI products, and no additional obligations or liabilities arise from TI providing such TI Resources. TI reserves the right to make corrections, enhancements, improvements and other changes to its TI Resources. TI has not conducted any testing other than that specifically described in the published documentation for a particular TI Resource.

Designer is authorized to use, copy and modify any individual TI Resource only in connection with the development of applications that include the TI product(s) identified in such TI Resource. NO OTHER LICENSE, EXPRESS OR IMPLIED, BY ESTOPPEL OR OTHERWISE TO ANY OTHER TI INTELLECTUAL PROPERTY RIGHT, AND NO LICENSE TO ANY TECHNOLOGY OR INTELLECTUAL PROPERTY RIGHT OF TI OR ANY THIRD PARTY IS GRANTED HEREIN, including but not limited to any patent right, copyright, mask work right, or other intellectual property right relating to any combination, machine, or process in which TI products or services are used. Information regarding or referencing third-party products or services does not constitute a license to use such products or services, or a warranty or endorsement thereof. Use of TI Resources may require a license from a third party under the patents or other intellectual property of the third party, or a license from TI under the patents or other intellectual property of TI.

TI RESOURCES ARE PROVIDED "AS IS" AND WITH ALL FAULTS. TI DISCLAIMS ALL OTHER WARRANTIES OR REPRESENTATIONS, EXPRESS OR IMPLIED, REGARDING RESOURCES OR USE THEREOF, INCLUDING BUT NOT LIMITED TO ACCURACY OR COMPLETENESS, TITLE, ANY EPIDEMIC FAILURE WARRANTY AND ANY IMPLIED WARRANTIES OF MERCHANTABILITY, FITNESS FOR A PARTICULAR PURPOSE, AND NON-INFRINGEMENT OF ANY THIRD PARTY INTELLECTUAL PROPERTY RIGHTS. TI SHALL NOT BE LIABLE FOR AND SHALL NOT DEFEND OR INDEMNIFY DESIGNER AGAINST ANY CLAIM, INCLUDING BUT NOT LIMITED TO ANY INFRINGEMENT CLAIM THAT RELATES TO OR IS BASED ON ANY COMBINATION OF PRODUCTS EVEN IF DESCRIBED IN TI RESOURCES OR OTHERWISE. IN NO EVENT SHALL TI BE LIABLE FOR ANY ACTUAL, DIRECT, SPECIAL, COLLATERAL, INDIRECT, PUNITIVE, INCIDENTAL, CONSEQUENTIAL OR EXEMPLARY DAMAGES IN CONNECTION WITH OR ARISING OUT OF TI RESOURCES OR USE THEREOF, AND REGARDLESS OF WHETHER TI HAS BEEN ADVISED OF THE POSSIBILITY OF SUCH DAMAGES.

Unless TI has explicitly designated an individual product as meeting the requirements of a particular industry standard (e.g., ISO/TS 16949 and ISO 26262), TI is not responsible for any failure to meet such industry standard requirements.

Where TI specifically promotes products as facilitating functional safety or as compliant with industry functional safety standards, such products are intended to help enable customers to design and create their own applications that meet applicable functional safety standards and requirements. Using products in an application does not by itself establish any safety features in the application. Designers must ensure compliance with safety-related requirements and standards applicable to their applications. Designer may not use any TI products in life-critical medical equipment unless authorized officers of the parties have executed a special contract specifically governing such use. Life-critical medical equipment is medical equipment where failure of such equipment would cause serious bodily injury or death (e.g., life support, pacemakers, defibrillators, heart pumps, neurostimulators, and implantables). Such equipment includes, without limitation, all medical devices identified by the U.S. Food and Drug Administration as Class III devices and equivalent classifications outside the U.S.

TI may expressly designate certain products as completing a particular qualification (e.g., Q100, Military Grade, or Enhanced Product). Designers agree that it has the necessary expertise to select the product with the appropriate qualification designation for their applications and that proper product selection is at Designers' own risk. Designers are solely responsible for compliance with all legal and regulatory requirements in connection with such selection.

Designer will fully indemnify TI and its representatives against any damages, costs, losses, and/or liabilities arising out of Designer's non-compliance with the terms and provisions of this Notice.

Mailing Address: Texas Instruments, Post Office Box 655303, Dallas, Texas 75265
Copyright © 2018, Texas Instruments Incorporated

Unikeyic Electronics

Global Electronic Components Distributor

Click to view pricing, inventory, delivery, and lifecycle information:

Texas Instruments:

ADS8344E MSP430F47127IPZ OPT3101RHFR TLC085CDR TPS7A8018DRBR MSP430F2001TRSAT MSP430G2332IN20 MSP430F5131IDA MSP430F5172IRSBT OPA643P SN74LVCZ240APW TPS92200D2DDCR MSP430F2112TRHBT SN75LV4735DBLE DS90C383MTDX/NOPB PCM56U TCAN332DR TLV990-28PFB UCC27210DR CC2520RHDR LMV358MMX/NOPB TPS71710DCKR UA9637ACPS BQ24314DSGR ISO124U/1K MSP430G2403IPW28 OPA2541BM SN74GTL2006PWR TPA6203A1DRBR TPS51125ARGER