毫欧 毫欧电阻 毫欧制造	HoCS1210贴片陶瓷系列规格书	系列号	HoCS
		修订日期	2022-08-16
		版本号	Ho-A0



■Features

- 3 Watts power rating in 1 Watt size, 1225 package
- Low TCR of ±100 PPM/°C
- Resistance values from 1m to 1 ohm
- High purity alumina substrate for high power dissipation
- Long side terminations with higher power rating
- RoHS Compliance

■Construction

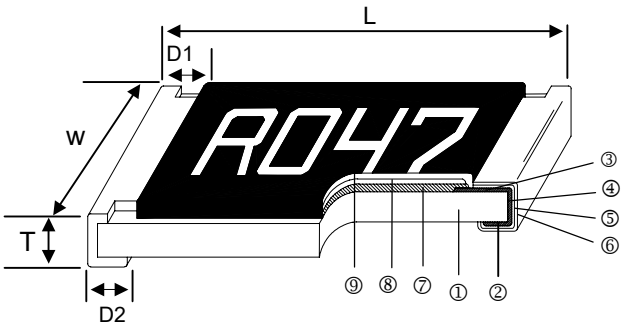

■Applications

- Power Management Applications
- Switching Power Supply
- Over Current Protection in Audio Applications
- Voltage Regulation Module (VRM)
- DC-DC Converter, Battery Pack, Charger, Adaptor
- Automotive Engine Control
- Disk Driver

①	Alumina Substrate	④	Edge Electrode	⑦	Resistor Layer
②	Bottom Electrode	⑤	Barrier Layer	⑧	Primary Overcoat
③	Top Electrode	⑥	External Electrode	⑨	Secondary Overcoat

■Dimensions

Type	Size (Inch)	L (mm)	W (mm)	T (mm)	D1 (mm)	D2 (mm)	Weight (g) (1000pcs)
CS	1210	3.10±0.10	2.60±0.15	0.55±0.10	0.50±0.30	0.50±0.25	15.5

■Part Numbering

Ho	CS	1210	150mR	1%	TCR200
制造商	产品类别	封装	阻值	精度	温度系数
毫欧电子	贴片陶瓷	1210	10mR~1000mR	D=±0.5% F=±1% G=±2% J=±5%	F=±200 G=±300 H=±400 J=±600

地址：深圳市龙华新区观澜大布头路南通邦高新产业园 A 栋 8 楼

深圳市毫欧电子有限公司 | 电话：0755-28153546 | 传真：0755-22630181 | 网址：www.moolee.com.cn

■Recommend Land Pattern

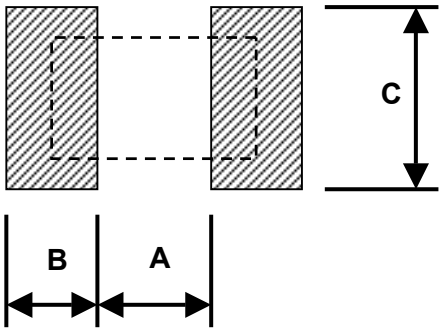

Type	A (mm)	B (mm)	C (mm)
CS1210	2.00	1.15	2.50±0.2

■Derating Curve

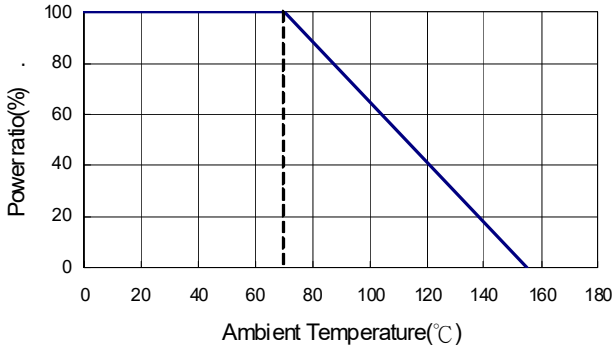

■Soldering Condition

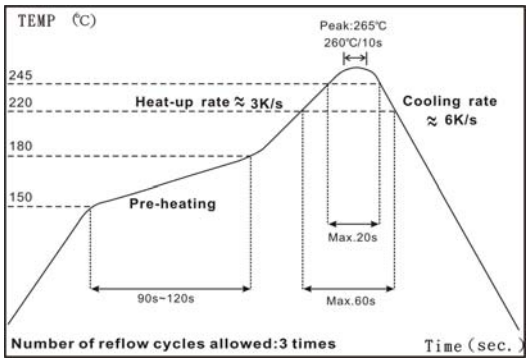

IR Reflow Soldering

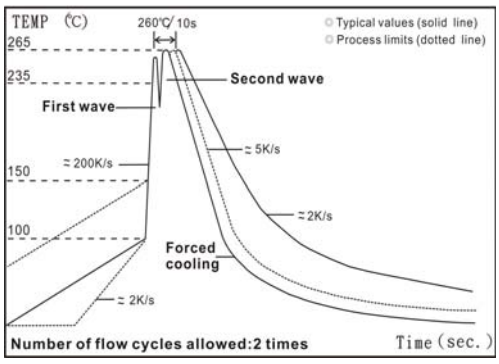

Wave Soldering (Flow Soldering)

(1) Time of IR reflow soldering at maximum temperature point 260°C：10s

(2) Time of wave soldering at maximum temperature point 260°C：10s

(3) Time of soldering iron at maximum temperature point 410°C：5s

■Standard Electrical Specifications

Item / Type	Power Rating at 70°C	Operating Temp. Range	Max. Operating Current	Resistance Range (mΩ) ±0.5% ±1% ±2% ±5%	TCR (PPM/°C)
CS1210	1/2W	-55 ~ +155°C	5.00A	10 - 20	±600
			7.07A	21 - 50	±400
			8.66A	51 - 91	±300
			10.0A	100 - 1000	±200

■Low TCR Electrical Specifications

Item / Type	Power Rating at 70°C	Operating Temp. Range	Max. Operating Current	Resistance Range (mΩ) ±0.5% ±1% ±2% ±5%	TCR (PPM/°C)
CS1210	1/2W	-55 ~ +155°C	2.58A	75 - 1000	±100

Operating Current=√(P/R)

■Environmental Characteristics

Item	Requirement	Test Method
Temperature Coefficient of Resistance (T.C.R.)	As Spec.	**JIS-C-5201-1 4.8** **IEC-60115-1 4.8** -55°C~+125°C, 25°C is the reference temperature
Short Time Overload	±(0.5%+0.05Ω)	**JIS C 5201-1 4.13** **IEC 60115-1 4.13** RCWV*2.5 or Max. Overload Voltage whichever is lower for 5 seconds
	±(1.0%+0.05Ω) For High power rating	
Insulation Resistance	≧10G	**JIS-C-5201-1 4.6** **IEC-60115-1 4.6** Max. Overload Voltage for 1 minute
Endurance	±(1.0%+0.05Ω)	**JIS-C-5201-1 4.25** **IEC-60115-1 4.25.1** 70±2°C, RCWV for 1000 hrs with 1.5 hrs “ON” and 0.5 hr “OFF”
Damp Heat with Load	±(0.5%+0.05Ω)	**JIS-C-5201-1 4.24** **IEC-60115-1 4.24** 40±2°C, 90~95% R.H., RCWV for 1000 hrs with 1.5 hrs “ON” and 0.5 hr “OFF”
Dry Heat	±(0.5%+0.05Ω)	**JIS-C-5201-1 4.23** **IEC-60115-1 4.23.2** at +155°C for 1000 hrs
Bending Strength	±(1.0%+0.05Ω)	**JIS-C-5201-1 4.33** **IEC-60115-1 4.33** Bending once for 5 seconds with 3mm 2010, 2512 sizes: 2mm
Solderability	95% min. coverage	**JIS-C-5201-1 4.17** **IEC-60115-1 4.17** 245±5°C for 3 seconds
Resistance to Soldering Heat	±(0.5%+0.05Ω)	**JIS-C-5201-1 4.18** **IEC-60115-1 4.18** 260±5°C for 10 seconds
Voltage Proof	No breakdown or flashover	**JIS-C-5201-1 4.7** **IEC-60115-1 4.7** 1.42 times Max. Operating Voltage for 1 minute
Leaching	Individual leaching area ≦5% Total leaching area ≦10%	**JIS-C-5201-1 4.18** **IEC-60068-2-58 8.2.1** 260±5°C for 30 seconds
Rapid Change of Temperature	±(0.5%+0.05Ω)	**JIS-C-5201-1 4.19** **IEC-60115-1 4.19** -55°C to +155°C, 5 cycles

RCWV(Rated Continuous Working Voltage)=$\sqrt{}$(P*R) or Max. Operating Voltage whichever is lower.

■ **Storage Temperature: 15~28°C; Humidity < 80%RH**

■Packaging

Packaging Quantity & Reel Specifications

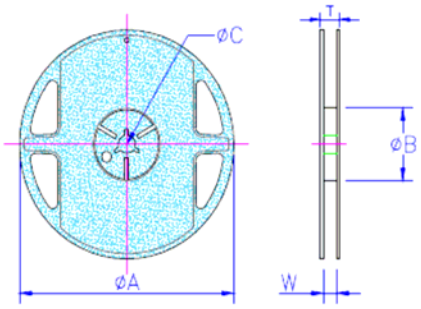

Type	ΦA (mm)	ΦB (mm)	ΦC (mm)	W (mm)	T (mm)	Paper Tape (EA)	Embossed Plastic Tape (EA)
CS1210	178.0±1.0	60.0+1.0	13.5±0.7	9.5±0.1	11.5±1.0	5,000	

Paper Tape Specifications

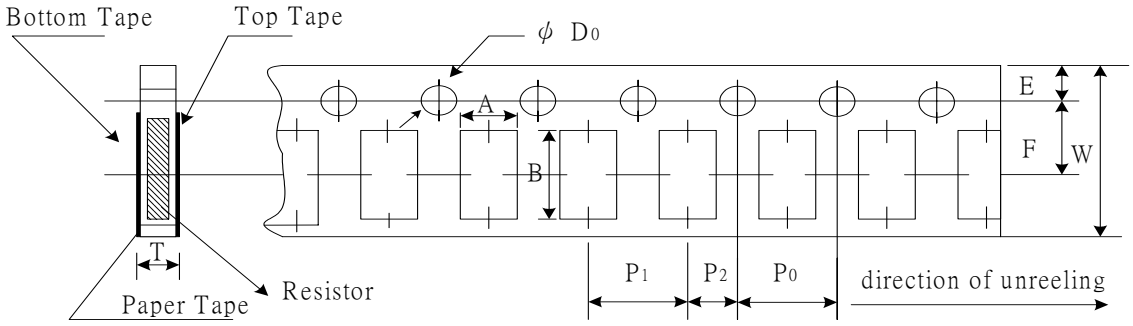

Type	A (mm)	B (mm)	W (mm)	E (mm)	F (mm)	P0 (mm)	P1 (mm)	P2 (mm)	ΦD0 (mm)	T (mm)
CS1210	2.90±0.10	3.50±0.20	8.0±0.20	1.75±0.10	3.50±0.05	4.00±0.10	4.00±0.05	2.00±0.05	1.50+0.1,-0	0.85±0.10

Unikeyic Electronics

Global Electronic Components Distributor

Click to view pricing, inventory, delivery, and lifecycle information:

Milliohm:

HoCS1206-330mR-1%-TCR200 HoJLR1206-1W-2mR-1% HoJLR2512-2W-6mR-1% HoLLR1206-1W-5mR-1% HolRS3921-5W-0.2mR-1% HoJLR2512-3W-140mR-1% To-220-20W-120R-5% To-220-35W-20R-1% HoJLR2512-2W-10mR-1% HoLLR2512-3W-3mR-1% HoLR2512-330mR-1% HoXGS1575-7W-2mR-1% HoJLR2512-3W-75mR-1% HoLLR2512-3W-6mR-1% HoLRM2512-2W-10mR-1% HOXTo-220-20W-100R-5% HoJLR1206-1W-50mR-1%-75ppm HoLR2512-170mR-1% To-220-35W-5R-5% To-247-100W-51R-5% HoFL2-500A-75mV-0.5%-YS HoJLR2512-2W-50mR-1%-75ppm HoJLR2512-3W-4mR-1% HoSS5930-7W-3mR-1% HoYLR2512-3W-3mR-1% HoCS1206-560mR-1%-TCR200 HoYH1206-1W-250mR-1% HoK1210.5-20-M HoLLR2512-3W-35mR-1% HoYLR1206-1W-20mR-1%