成品图

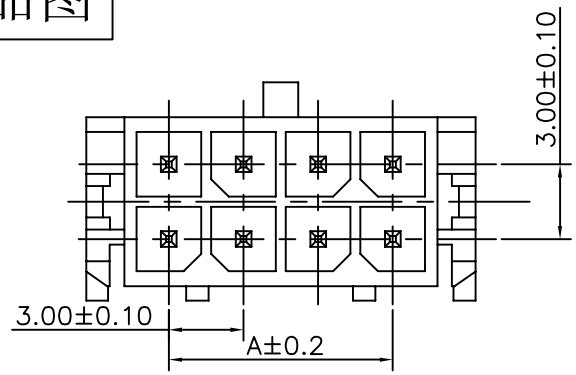

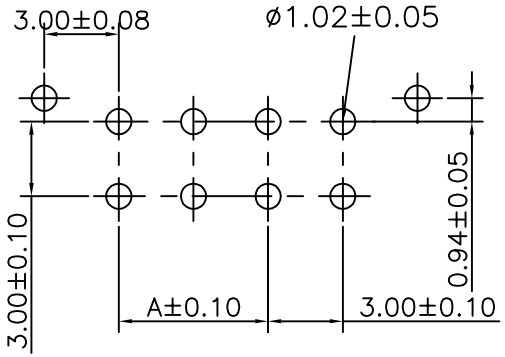

P.C.B LAYOUT

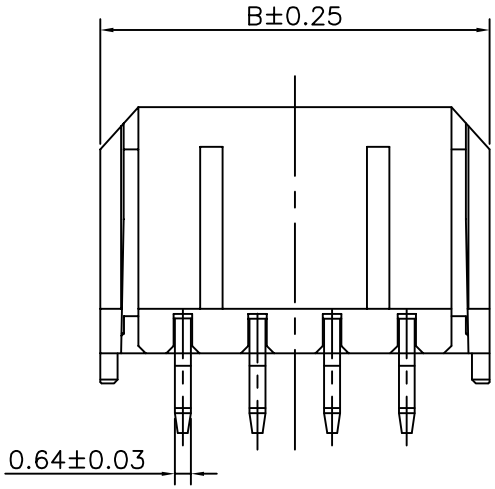

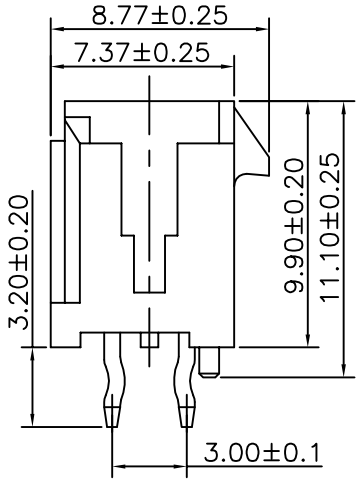

SPECIFICATIONS

Current Rating: 6A AC,DC
Voltage Rating: 250V AC,DC
Temperature Range: −40°C ~ +105°C
Contact Resistance: 10mΩ Max
Insulation Resistance: 1000MΩ Min
Withstanding Voltage: 1500V AC/minute
Pin Material: Brass/Tin−plated
Material: LCP/PBT GF30%,UL94V−0
Color: Natural(Black)

Ordering Information & Dimensions

PART NO.	Dimensions	
	A	B
C3030WV-F-2X01P	---	6.65
C3030WV-F-2X02P	3.00	9.65
C3030WV-F-2X03P	6.00	12.65
C3030WV-F-2X04P	9.00	15.65
C3030WV-F-2X05P	12.00	18.65
C3030WV-F-2X06P	15.00	21.65
C3030WV-F-2X07P	18.00	24.65
C3030WV-F-2X08P	21.00	27.65
C3030WV-F-2X09P	24.00	30.65
C3030WV-F-2X10P	27.00	33.65
C3030WV-F-2X11P	30.00	36.65
C3030WV-F-2X12P	33.00	39.65
C3030WV-F-2X13P	36.00	42.65
C3030WV-F-2X14P	39.00	45.65
C3030WV-F-2X15P	42.00	48.65
C3030WV-F-2X16P	45.00	51.65
C3030WV-F-2X17P	48.00	54.65
C3030WV-F-2X18P	51.00	57.65
C3030WV-F-2X19P	54.00	60.65
C3030WV-F-2X20P	57.00	63.65

REV.	DESCRIPTION	DATE
A0	NEW RELEASE	2019.09.05

深圳市连欣科技有限公司

UNIT	SCALE	SHEET
mm		1 of 1

DRAWN BY: CHEN 2019.09.05
APPROVED BY:
GENERAL TOLERANCE: X.X±0.25, X.XX±0.15, X.XXX±0.05, ANGLE±

TITLE: 3.00mm PITCH 180°WAFER, MICRO−FIT

PART NO.: XDWF−C3030WV−2XXP

REV. A0

Unikeyic Electronics

Global Electronic Components Distributor

Click to view pricing, inventory, delivery, and lifecycle information:

szlianxin:

XDFH-0259-2*13P 51146 SCT1254WR-S-3P HDMI AF XDHF-1901-0150 APCI0085-P005A
APCI0164-P001A WAFER MX3.0 XDWF-C3030WV-2*7P WAFER XH2.54 XDWF-2500-02P
XDFH-0259-2*12P 20455-030E-12 MINI PCI XDAP-0528-049 WAFER MX3.0 XDWF-C3030WR-2*6P
XDDB-1809-0816 51146 SCT1254WR-S-6P WAFER MX3.0 XDWF-C3030WR-2*10P XDPF-0205-20S
XDJK-0051-025 WAFER MX3.0 XDWF-C3030WR-2*3P WAFER PH2.0 XDWF-0920-04P
WAFER XH2.54 XDWF-2501-02P WAFER1.25 XDWF-1251-05P XDFH-0254-2*11P XDFH-0254-2*12P
XDWF-0910-05P APCI0107-P001A WAFER XH2.54 XDWF-2500-06P XDFH-0259-2*4P
SIM 6PIN XDSM-06185-0412 WAFER MX3.0 XDWF-C3030WV-2*2P XDCR-1220-006 XDFH-0254-2*7P