DATE	REV	ECN	APP'D BY
5/20/2019	A0		ADB

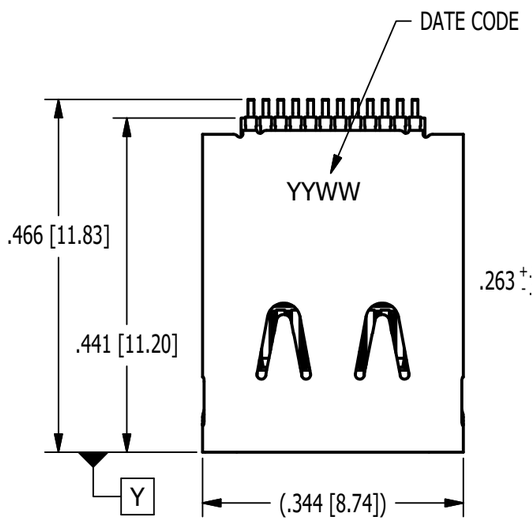

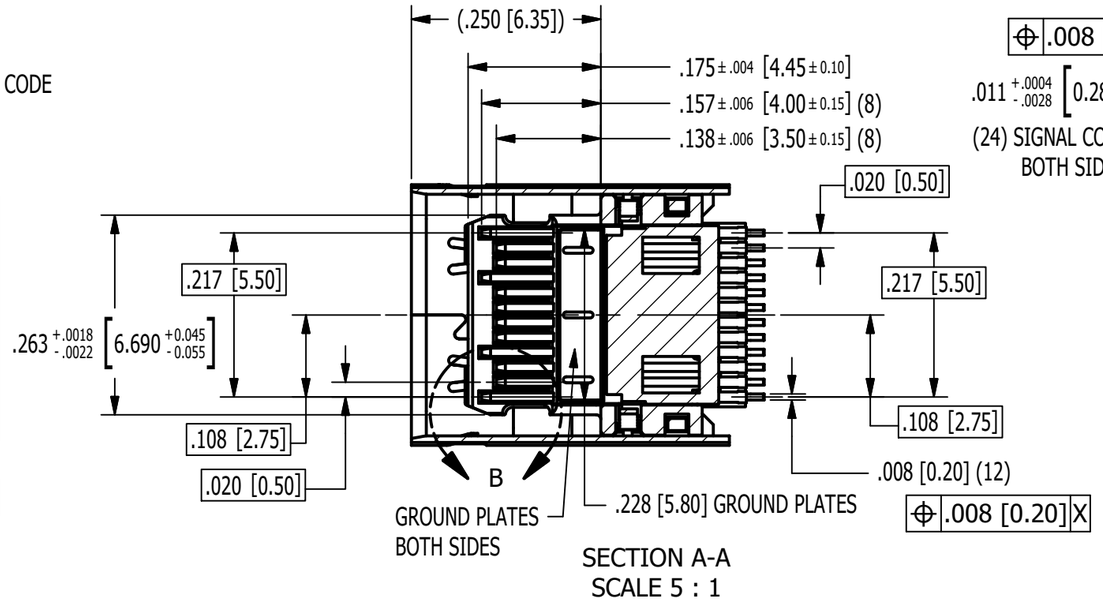

SECTION A-A
SCALE 5 : 1

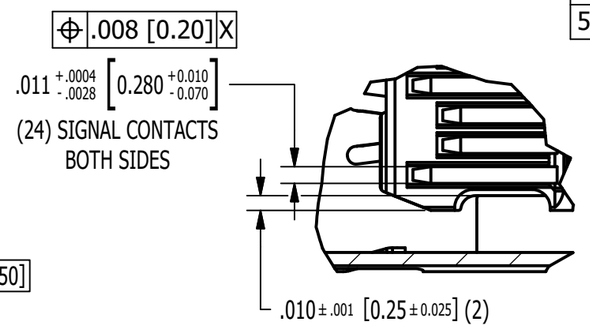

DETAIL B
SCALE 10 : 1

NOTES:
1. CONNECTOR MATERIALS:
   HOUSING: THERMOPLASTIC BLACK UL94 V-0
   SHELL/MID-PLATE: STAINLESS STEEL
   CONTACTS: BRASS
   CONTACT PLATING:
   UNDERPLATE 80u"-160u" NICKEL
   30u" Pd-Ni + 2u' Au IN THE CONTACT AREA
   SOLDER TAILS 100u"-200u' TIN (LEAD FREE)

2. ELECTRICAL:
   OPERATION VOLTAGE: 20V
   CURRENT RATING: 5 AMPS MAX
   INSULATION RESISTANCE: 100 MΩ MIN @ 100 VDC
   DIELECTRIC WITHSTANDING VOLTAGE: 100 VAC/MIN

3. ENVIRONMENTAL:
   OPERATING TEMPERATURE: -40˚C - 105˚C
   MATING CYCLES: 10,000 INSERTIONS

Part Number	DIM A	PCB THICKNESS
SS-52400-002	.059 [1.50]	.039 [1.00]
SS-52400-003	.075 [1.90]	.063 [1.60]

THIRD ANGLE PROJECTION

DO NOT SCALE DRAWING

DRAWING IS SUBJECT TO CHANGE WITHOUT NOTICE

DIMENSIONS: INCHES [METRIC]

UNLESS OTHERWISE SPECIFIED TOLERANCES ARE ±.005 [0.13] ANGLES ARE ± 1°

SHEET NO. 1 OF 3

stewart CONNECTOR a bel group
11118 Susquehanna Trail South
Glen Rock, PA 17327-9199
(717) 235-7512
http://www.stewartconnector.com

TITLE: USB TYPE C RIGHT ANGLE RECEPTACLE

THIS DRAWING AND THE SUBJECT MATTER SHOWN THEREON ARE CONFIDENTIAL AND THE PROPRIETARY PROPERTY OF STEWART CONNECTOR AND SHALL NOT BE REPRODUCED, COPIED, OR USED IN ANY MANNER WITHOUT PRIOR WRITTEN CONSENT OF STEWART CONNECTOR. THIS PRODUCT MAY BE PROTECTED BY ONE OR MORE OF THE FOLLOWING US PATENTS: 5791942 6217391 6368159 6419526 6602097 687722 6964587 7048590 7086909 7568950 7686650 OTHER PATENTS MAY BE PENDING.

DRN BY: G. LUCAS	DATE: 5/20/2019
APPD BY: A. BAUM	DATE: 5/20/2019
DWG NO: CT520012	REV: A0

RoHS

CT Jack

Inventor

USB TYPE C ASSIGNMENTS			
PIN NUMBER	SIGNAL NAME	PIN NUMBER	SIGNAL NAME
A1	GND	B12	GND
A2	SSTXp1	B11	SSRXp1
A3	SSTXn1	B10	SSRXn1
A4	VBUS	B9	VBUS
A5	CC1	B8	SBU2
A6	Dp1	B7	Dn2
A7	Dn1	B6	Dp2
A8	SBU1	B5	CC2
A9	VBUS	B4	VBUS
A10	SSRXn2	B3	SSTXn2
A11	SSRXp2	B2	SSTXp2
A12	GND	B1	GND

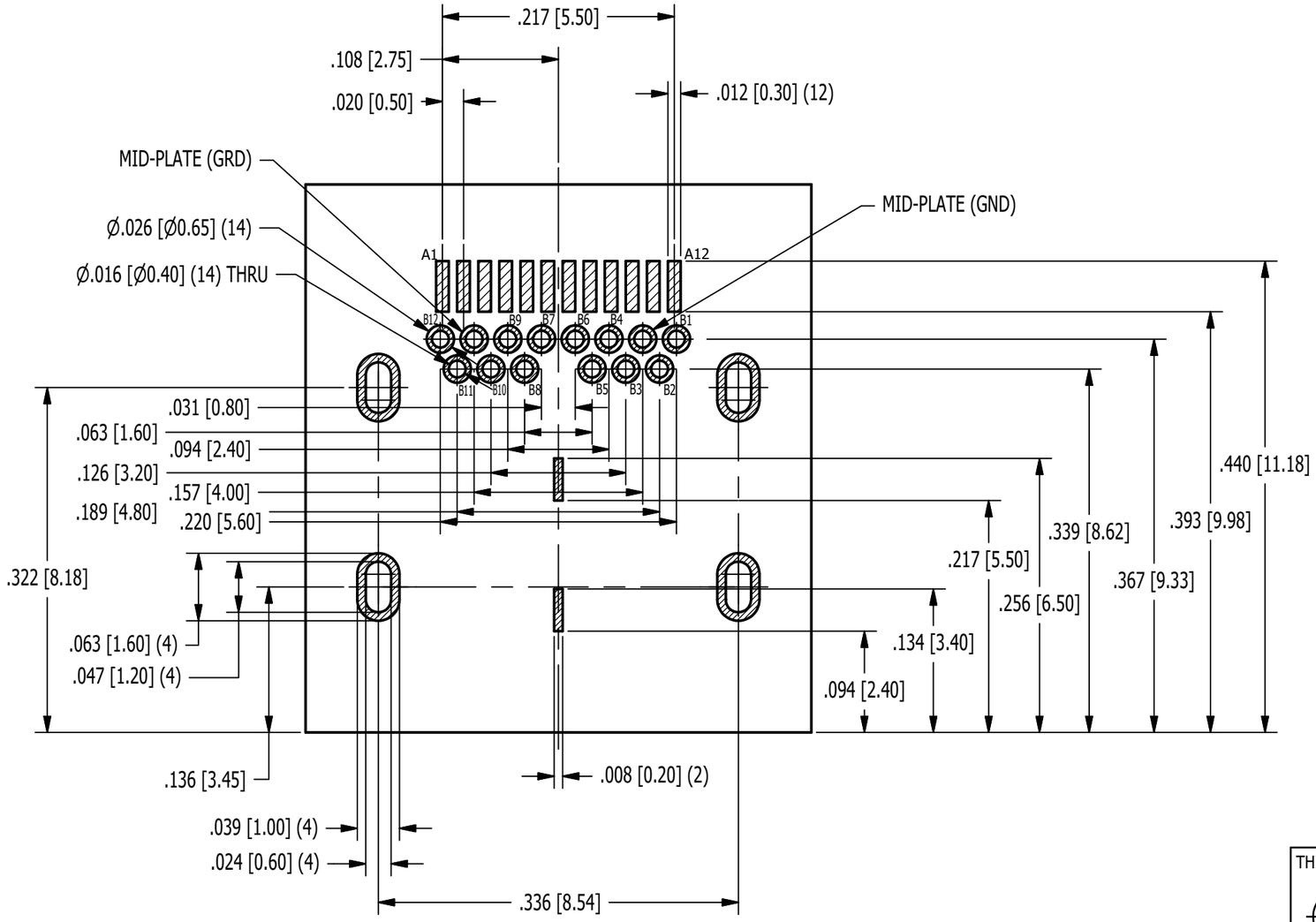

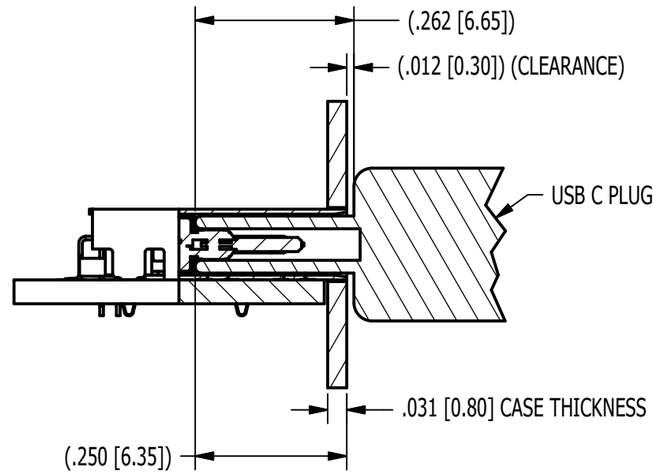

RECOMENDED PCB LAYOUT
TOLERANCE ± .002 [0.05]
PCB THICKNESS =
.039 [1.00] FOR .059 [1.50] SOLDER TAIL
.063 [1.60] FOR .075 [1.90] SOLDER TAIL

RoHS

CT Jack

Inventor

THIRD ANGLE PROJECTION

DO NOT SCALE DRAWING

DRAWING IS SUBJECT TO CHANGE WITHOUT NOTICE

DIMENSIONS: INCHES [METRIC]

UNLESS OTHERWISE SPECIFIED TOLERANCES ARE ±.005 [0.13] ANGLES ARE ± 1°

SHEET NO. 2 OF 3

stewart CONNECTOR a bel group
11118 Susquehanna Trail South
Glen Rock, PA 17327-9199
(717) 235-7512
http://www.stewartconnector.com

TITLE: USB TYPE C RIGHT ANGLE RECEPTACLE

THIS DRAWING AND THE SUBJECT MATTER SHOWN THEREON ARE CONFIDENTIAL AND THE PROPRIETARY PROPERTY OF STEWART CONNECTOR AND SHALL NOT BE REPRODUCED, COPIED, OR USED IN ANY MANNER WITHOUT PRIOR WRITTEN CONSENT OF STEWART CONNECTOR. THIS PRODUCT MAY BE PROTECTED BY ONE OR MORE OF THE FOLLOWING US PATENTS: 5791942 6217391 6368159 6419526 6602097 687722 6964587 7048590 7086909 7568950 7686650 OTHER PATENTS MAY BE PENDING.

DRN BY:	DATE:
G. LUCAS	5/20/2019
APPD BY:	DATE:
A. BAUM	5/20/2019
DWG NO:	REV.
CT520012	A0

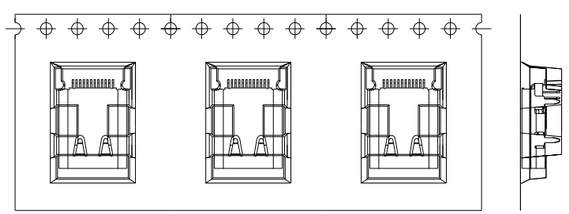

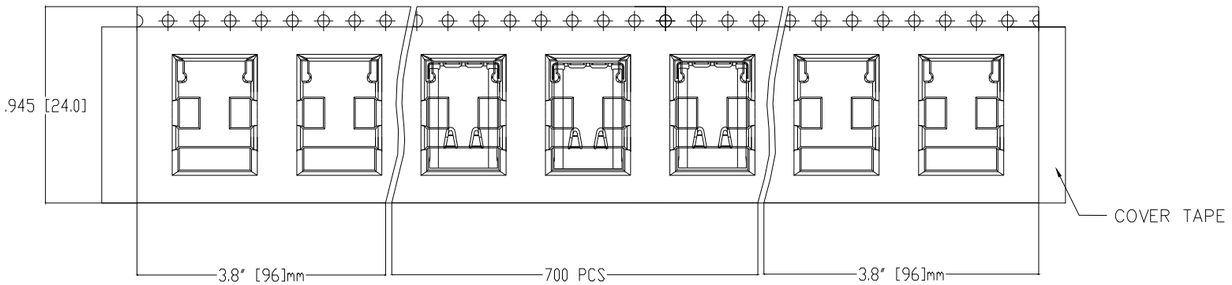

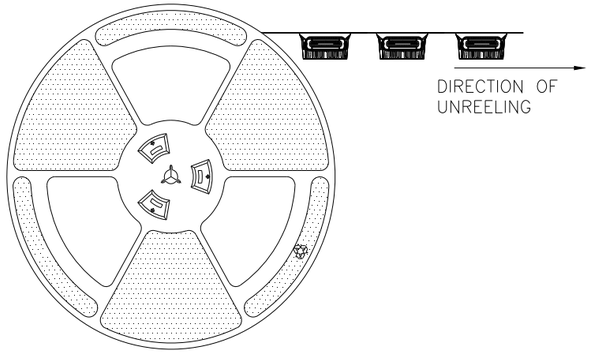

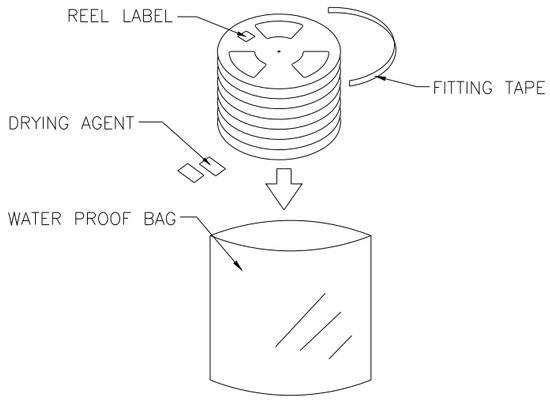

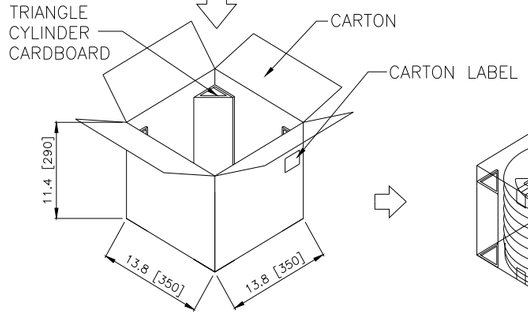

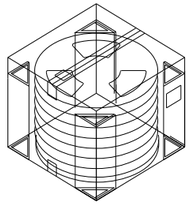

700 PCS/REEL
9 REELS =
6300 PCS?CARTON

RoHS

THIRD ANGLE PROJECTION	stewart CONNECTOR a bel group 11118 Susquehanna Trail South Glen Rock, PA 17327-9199 (717) 235-7512 http://www.stewartconnector.com
DO NOT SCALE DRAWING	TITLE: USB TYPE C RIGHT ANGLE RECEPTACLE
DRAWING IS SUBJECT TO CHANGE WITHOUT NOTICE	
DIMENSIONS: INCHES [METRIC]	THIS DRAWING AND THE SUBJECT MATTER SHOWN THEREON ARE CONFIDENTIAL AND THE PROPRIETARY PROPERTY OF STEWART CONNECTOR AND SHALL NOT BE REPRODUCED, COPIED, OR USED IN ANY MANNER WITHOUT PRIOR WRITTEN CONSENT OF STEWART CONNECTOR. THIS PRODUCT MAY BE PROTECTED BY ONE OR MORE OF THE FOLLOWING US PATENTS: 5791942 6217391 6368159 6419526 6602097 687722 6964587 7048590 7086909 7568950 7686650 OTHER PATENTS MAY BE PENDING.
UNLESS OTHERWISE SPECIFIED TOLERANCES ARE ±.005 [0.13] ANGLES ARE ± 1°	DRN BY: G. LUCAS — DATE: 5/20/2019
SHEET NO. 3 OF 3	APPD BY: A. BAUM — DATE: 5/20/2019
	DWG NO: CT520012 — REV: A0

CT Jack

Inventor

Unikeyic Electronics

Global Electronic Components Distributor

Click to view pricing, inventory, delivery, and lifecycle information:

Stewart Connector:

67PAB-010-K 67PPC-010-K SS-39200-006 SS-6488S-A-NF SS-74800-139 SS-90000-014 67U3BD-006-K SS-52100-001 SS-6488-FLS 67U2BD-003-K 937-SP-3066 937-SP-3088 940-SP-3066 SS-52100-004 SS-74301-002 BM-MAMM020M SS-7388H22S-PG4-AC-50 SS-74810-003 450-015 CA77-003M0-2 SC-3CCK010M SS-39400-004 SS-74500-043 SS-39200-044 SS-60300-016 SS-6488S-A-FLS BM-1RSPK005F SC-2CMK020M SS-52000-004 SS65100-030F