Features

- Average Rectified Output Current:I_O=400mA
- Power Dissipation of 200mW



SOD-323



Package Marking and Ordering Information

Product ID	Pack	Marking	Qty(PCS)
B0540WS-7	SOD-323	B4	3000

Maximum Ratings (Ta=25°C unless otherwise noted)

Parameter	Symbol	Value	Unit
Peak Repetitive Reverse Voltage	V_{RRM}	40	V
Reverse Voltage	V_R	40	V
Average Forward Rectified Current	$I_{F(AV)}$	400	mA
Non-Repetitive Peak Forward Surge Current at t = 1 s	I_{FSM}	2	A
Power Dissipation	P_{tot}	200	mW
Operating and Storage Temperature Range	T_j, T_{stg}	- 65 to + 125	°C

Electrical Characteristics (Ta=25°C unless otherwise specified)

Parameter	Symbol	Min.	Typ.	Max.	Unit
Reverse Breakdown Voltage	$V_{(BR)R}$	40	- - -	- - -	V
Reverse Leakage Current at V_R at V_R = 20 V at V_R = 10 V	I_R	- - -	- - -	5 5 5	μA
Forward Voltage at I_F = 20 mA at I_F = 200 mA	V_F	- -	- -	0.37 0.6	V
Total Capacitance at V_R = 0 V, f = 1 MHz	C_T	-	50	-	pF
Reverse Recovery Time at I_F = I_R = 200 mA, I_{rr} = 0.1 I_R, R_L = 100 Ω	t_{rr}	-	10	-	ns

Typical Characteristics

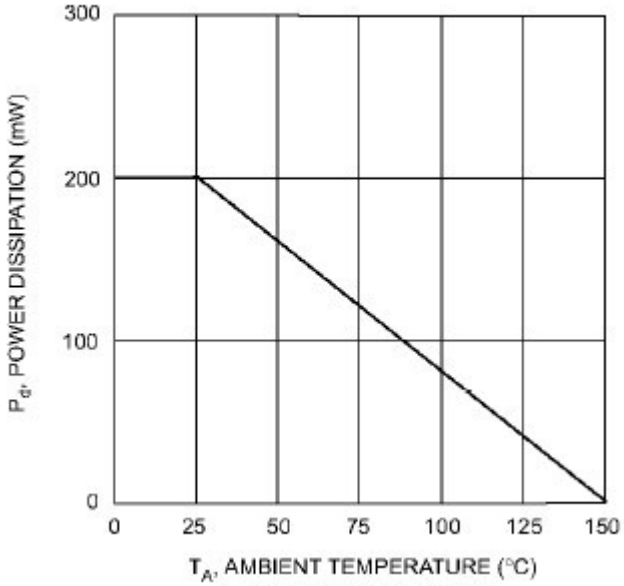

Fig. 1 Power Derating Curve

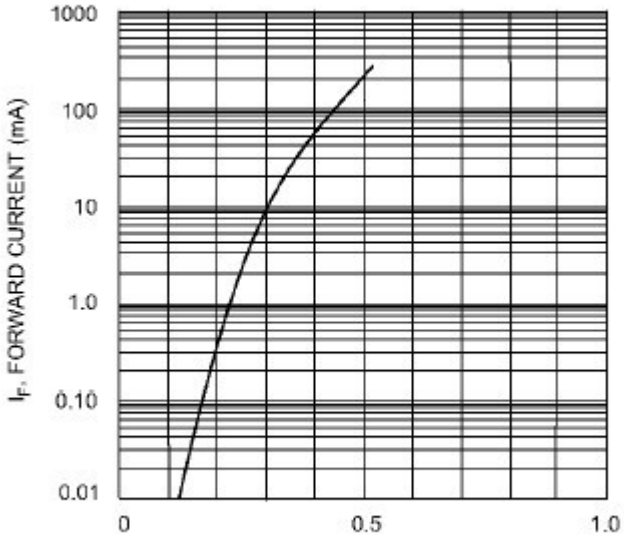

Fig. 2 Typical Forward Characteristics

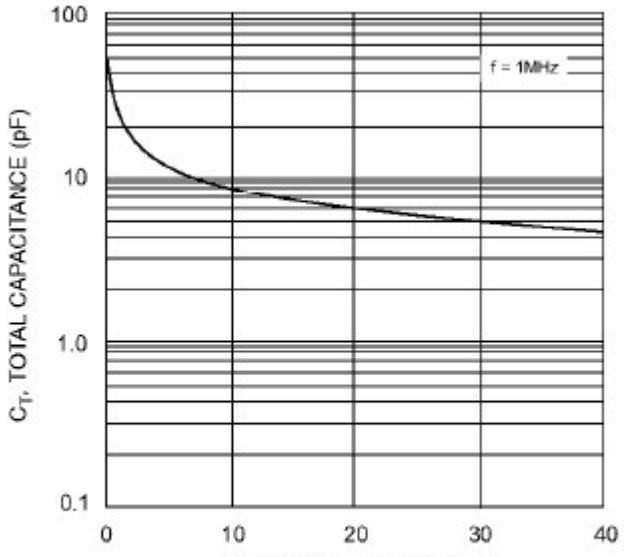

Fig. 3 Total Capacitance vs Reverse Voltage

Package Outline Dimensions

SOD-323

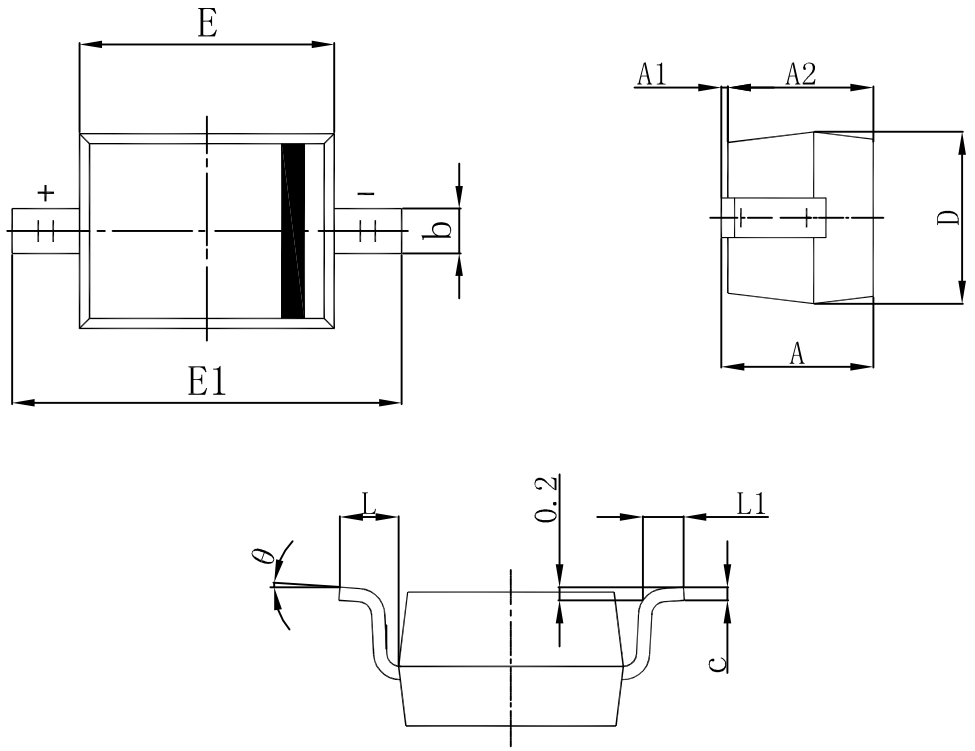

Symbol	Dimensions In Millimeters		Dimensions In Inches	
	Min	Max	Min	Max
A		1.100		0.043
A1	0.000	0.100	0.000	0.004
A2	0.800	1.000	0.031	0.039
b	0.250	0.350	0.010	0.014
c	0.080	0.150	0.003	0.006
D	1.200	1.400	0.047	0.055
E	1.600	1.800	0.063	0.071
E1	2.500	2.750	0.098	0.108
L	0.475 REF		0.019 REF	
L1	0.250	0.400	0.010	0.016
θ	0°	8°	0°	8°

Attention

■ Any and all HUA XUAN YANG ELECTRONICS products described or contained herein do not have specifications that can handle applications that require extremely high levels of reliability, such as life-support systems, aircraft's control systems, or other applications whose failure can be reasonably expected to result in serious physical and/or material damage. Consult with your HUA XUAN YANG ELECTRONICS representative nearest you before using any HUA XUAN YANG ELECTRONICS products described or contained herein in such applications.

■ HUA XUAN YANG ELECTRONICS assumes no responsibility for equipment failures that result from using products at values that exceed, even momentarily, rated values (such as maximum ratings, operating condition ranges, or other parameters) listed in products specifications of any and all HUA XUAN YANG ELECTRONICS products described or contained herein.

■ Specifications of any and all HUA XUAN YANG ELECTRONICS products described or contained herein stipulate the performance, characteristics, and functions of the described products in the independent state, and are not guarantees of the performance, characteristics, and functions of the described products as mounted in the customer's products or equipment. To verify symptoms and states that cannot be evaluated in an independent device, the customer should always evaluate and test devices mounted in the customer's products or equipment.

■ HUA XUAN YANG ELECTRONICS CO.,LTD. strives to supply high-quality high-reliability products. However, any and all semiconductor products fail with some probability. It is possible that these probabilistic failures could
give rise to accidents or events that could endanger human lives, that could give rise to smoke or fire, or that could cause damage to other property. When designing equipment, adopt safety measures so that these kinds of accidents or events cannot occur. Such measures include but are not limited to protective circuits and error prevention circuits for safe design, redundant design, and structural design.

■ In the event that any or all HUA XUAN YANG ELECTRONICS products(including technical data, services) described or contained herein are controlled under any of applicable local export control laws and regulations, such products must not be exported without obtaining the export license from the authorities concerned in accordance with the above law.

■ No part of this publication may be reproduced or transmitted in any form or by any means, electronic or mechanical, including photocopying and recording, or any information storage or retrieval system, or otherwise, without the prior written permission of HUA XUAN YANG ELECTRONICS CO.,LTD.

■ Information (including circuit diagrams and circuit parameters) herein is for example only ; it is not guaranteed for volume production. HUA XUAN YANG ELECTRONICS believes information herein is accurate and reliable, but no guarantees are made or implied regarding its use or any infringements of intellectual property rights or other rights of third parties.

■ Any and all information described or contained herein are subject to change without notice due to product/technology improvement, etc. When designing equipment, refer to the "Delivery Specification" for the HUA XUAN YANG ELECTRONICS product that you intend to use.

Unikeyic Electronics

Global Electronic Components Distributor

Click to view pricing, inventory, delivery, and lifecycle information:

HXY MOSFET:

TPSMB100CA-VR AZ4007-01H PJEC5V0M1FN2 PJSD24CW_R1 HACPDQC5V0-HF HLY323BC1524L HPTVSUC3D5VB HRCLAMP3371ZCTFT HSG3D15B3.3MA PESDNC2XD5VBF PESDSC2FD5VU ESD5L5.0C-HXY HCEZ36V,L3F AZ4836-01L TPSMB28A-VR 60N06 ESD5LM5.0C-HXY HESD36VD3B HSEN2411D3 PESDLC2FD3V3BH PESDNC2XD5VBL AQ15C-01FTG HAZ4007-01H HESDSLC3V3D3B HSTS521050B331 BV05C-H HSD15C.TCT HSEN3611D3 LM393DR-HXY RLSD32A121V